(c) JEPPESEN SANDERSON, INC., 2014, ALL RIGHTS RESERVED

List of pages in this Trip Kit

Trip Kit Index
Airport Information For URKG
Terminal Charts For URKG
Revision Letter For Cycle 01-2014
Change Notices
Notebook

(c) JEPPESEN SANDERSON, INC., 2014, ALL RIGHTS RESERVED

General Information

Location: Gelendzhik Rus
IATA Code: GDZ
Lat/Long: N44° 34.9' E038° 00.8'
Elevation: 132 ft

Airport Use: Public
Magnetic Variation: 6.7°E

Fuel Types: Jet A-1
Customs: No
Airport Type: IFR
Landing Fee: No
Control Tower: Yes
Jet Start Unit: No
LLWS Alert: No
Beacon: No

Sunrise: 0505 Z
Sunset: 1403 Z,

Runway Information

Runway: 01
Length x Width: 10171 ft x 148 ft
Surface Type: asphalt
TDZ-Elev: 90 ft
Lighting: Edge, ALS

Runway: 19
Length x Width: 10171 ft x 148 ft
Surface Type: asphalt
TDZ-Elev: 132 ft
Lighting: Edge

Communication Information

ATIS 134.875
ATIS 133.375 Non-English
Gelendzhik Tower 122.7 Non-English
Gelendzhik Buksirovka Ramp/Taxi Control 118.9 Non-English
Gelendzhik Radar 124.425 Non-English
Gelendzhik Radar 121.0 Secondary Non-English
Gelendhzik Transit Operations 131.125 Non-English

Apt Elev 132′	Alt set: MM (hPa on request) QNH on request **(QFE)** Trans level: FL60 Trans alt (hgt): 4730′ ***(4640′)*** Mountainous area.

DOROL 2, KUTON 2
LIMAS 2, NALUD 2
RULAB 2
RWY 01 ARRIVALS

ASR IN OPERATION
WHEN UR(D)-102 AND/OR UR(D)-103 ACTIVE
ARRIVALS & HOLDING BY ATC

FOR RUSSIAN USERS ONLY

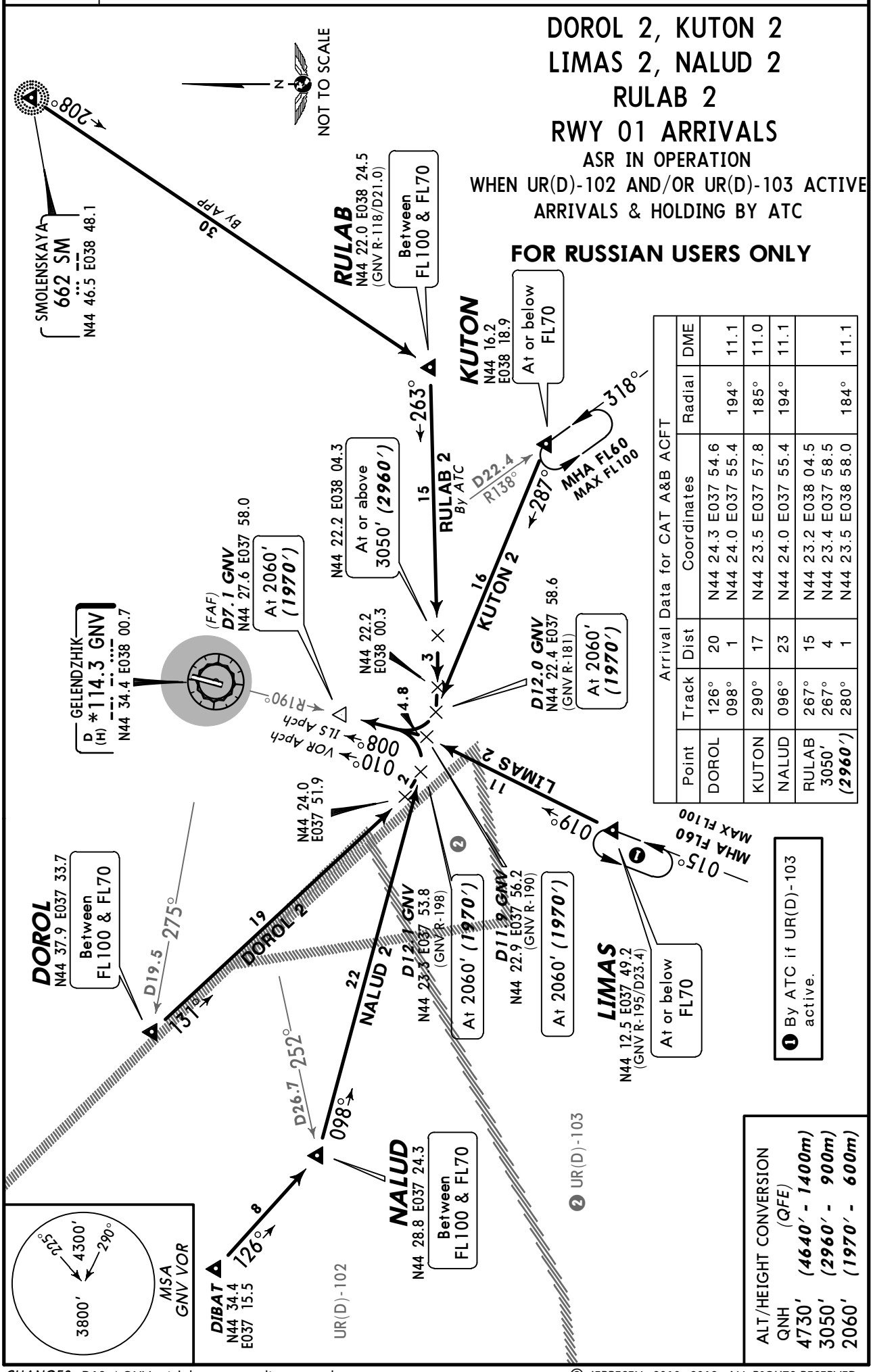

Arrival Data for CAT A&B ACFT

Point	Track	Dist	Coordinates	Radial	DME
DOROL	126° 098°	20 1	N44 24.3 E037 54.6 N44 24.0 E037 55.4	194°	11.1
KUTON	290°	17	N44 23.5 E037 57.8	185°	11.0
NALUD	096°	23	N44 24.0 E037 55.4	194°	11.1
RULAB 3050′ (2960′)	267° 267° 280°	15 4 1	N44 23.2 E038 04.5 N44 23.4 E037 58.5 N44 23.5 E038 58.0	184°	11.1

CHANGES: D12.4 GNV withdrawn; coordinates update.

© JEPPESEN, 2010, 2012. ALL RIGHTS RESERVED.

Apt Elev 132′	Alt set: MM (hPa on request) QNH on request **(QFE)** Trans level: FL60 Trans alt (hgt): 4730′ ***(4640′)*** Mountainous area.

DOROL 2A *[DORO2A]*, DOROL 2B *[DORO2B]*
KUTON 2A *[KUTO2A]*, KUTON 2B *[KUTO2B]*
LIMAS 2A *[LIMA2A]*, LIMAS 2B *[LIMA2B]*
NALUD 2A *[NALU2A]*, NALUD 2B *[NALU2B]*
OSNIR 2A *[OSNI2A]*
RWY 01 ARRIVALS

WHEN UR(D)-102 AND/OR UR(D)-103 ACTIVE
ARRIVALS & HOLDING BY ATC

FOR RUSSIAN USERS ONLY

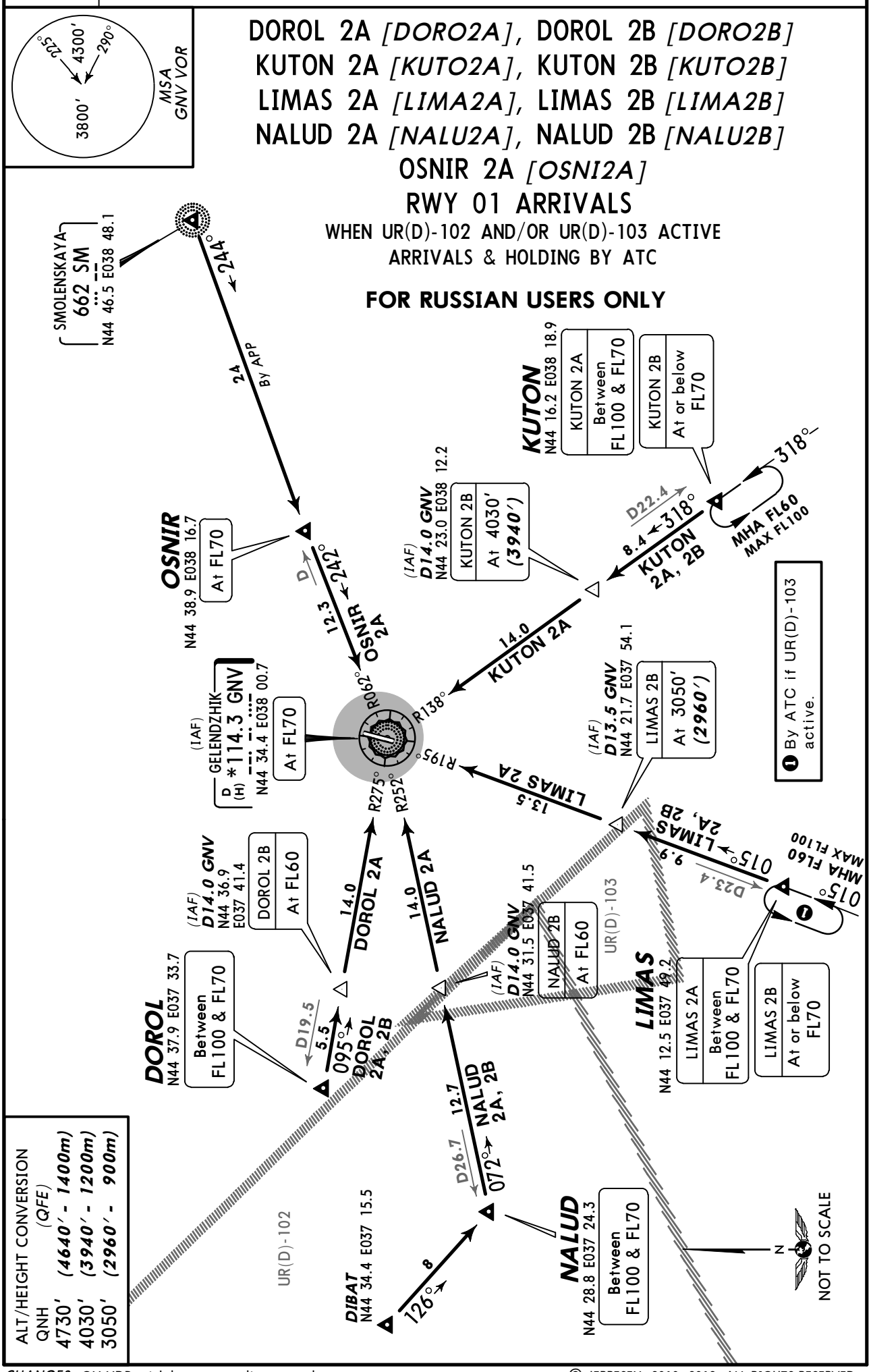

ALT/HEIGHT CONVERSION (QFE)	
QNH	
4730′	***(4640′ - 1400m)***
4030′	***(3940′ - 1200m)***
3050′	***(2960′ - 900m)***

CHANGES: GN NDB withdrawn; coordinates update.

© JEPPESEN, 2010, 2012. ALL RIGHTS RESERVED.

Apt Elev 132′	QNH on request **(QFE)** Trans level: FL60 Trans alt: 4730′ ***(4598′)*** Mountainous area.

DOROL 1A *[DORO1A]*, KUTON 1A *[KUTO1A]* LIMAS 1A *[LIMA1A]*, NALUD 1A *[NALU1A]* OSNIR 1A *[OSNI1A]* RWY 19 DEPARTURES

FOR RUSSIAN USERS ONLY

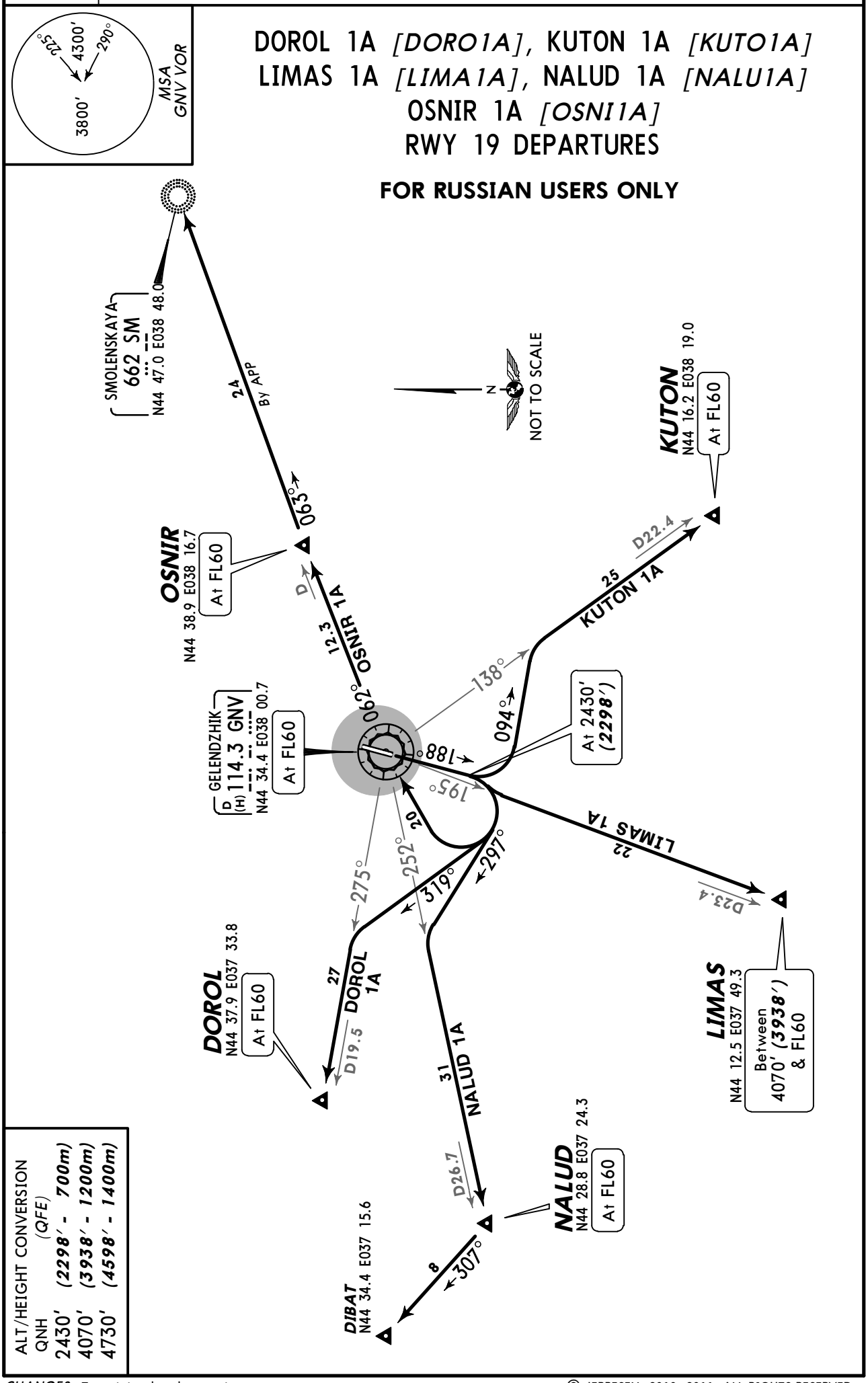

ALT/HEIGHT CONVERSION	(QFE)
QNH	
2430′	***(2298′ - 700m)***
4070′	***(3938′ - 1200m)***
4730′	***(4598′ - 1400m)***

CHANGES: Transition level; crossings.

© JEPPESEN, 2010, 2011. ALL RIGHTS RESERVED.

Apt Elev 132′	QNH on request **(QFE)** Trans level: FL60 Trans alt: 4730′ ***(4598′)*** Mountainous area.

DOROL 1B *[DORO1B]*, KUTON 1B *[KUTO1B]*
LIMAS 1B *[LIMA1B]*, NALUD 1B *[NALU1B]*
OSNIR 1B *[OSNI1B]*
RWY 19 DEPARTURES
ASR IN OPERATION

FOR RUSSIAN USERS ONLY

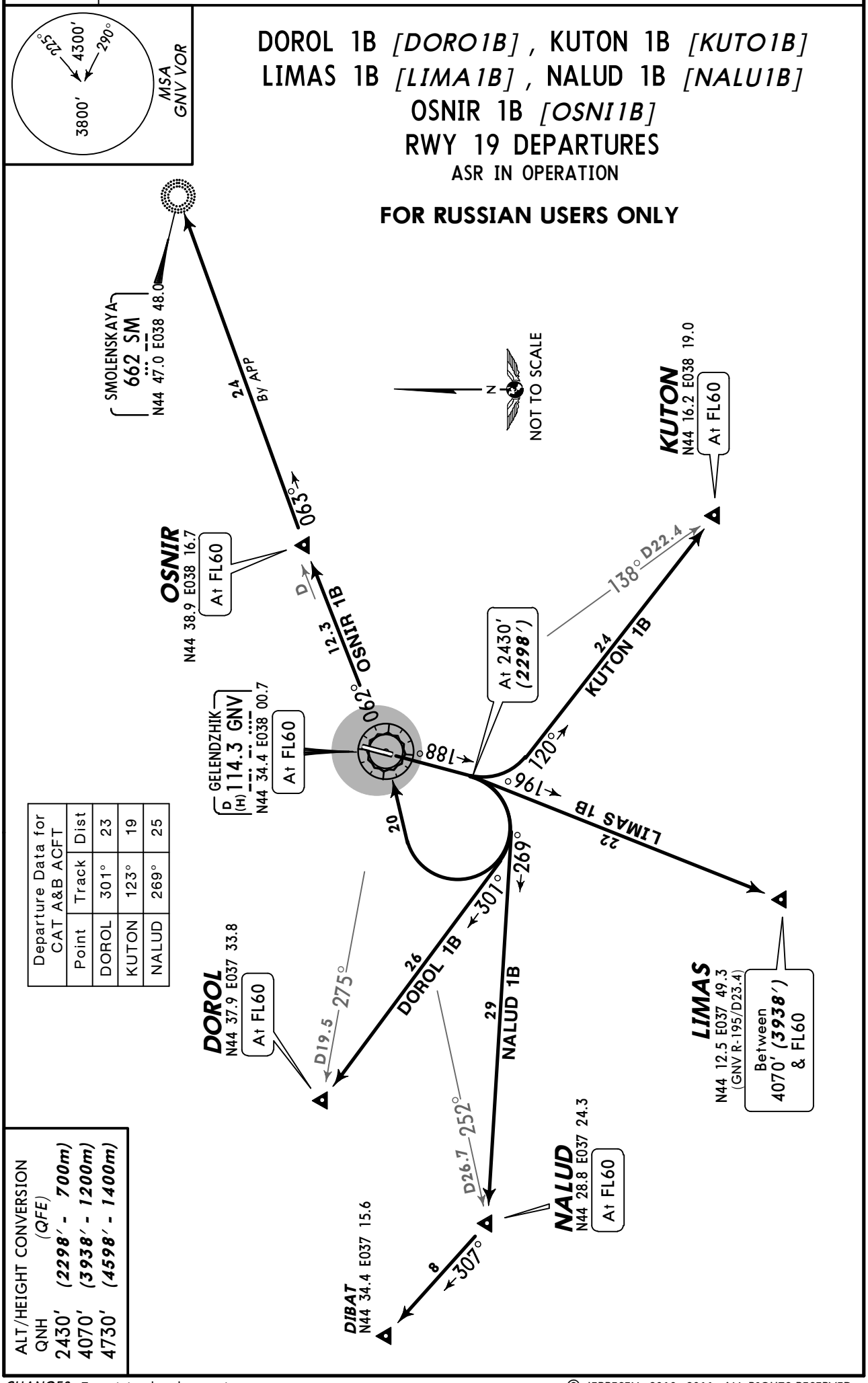

Departure Data for CAT A&B ACFT		
Point	Track	Dist
DOROL	301°	23
KUTON	123°	19
NALUD	269°	25

ALT/HEIGHT CONVERSION	
QNH	*(QFE)*
2430′	***(2298′ - 700m)***
4070′	***(3938′ - 1200m)***
4730′	***(4598′ - 1400m)***

CHANGES: Transition level; crossings.

© JEPPESEN, 2010, 2011. ALL RIGHTS RESERVED.

Apt Elev 132′	QNH on request **(QFE)** Trans level: FL60 Trans alt (hgt): 4730′ ***(4640′)*** 1. Take-off should be carried out under condition, no tailwind component. 2. Mountainous area.

DOROL 1C *[DORO1C]*
KUTON 1C *[KUTO1C]*
LIMAS 1C *[LIMA1C]*
NALUD 1C *[NALU1C]*
OSNIR 1C *[OSNI1C]*
RWY 01 DEPARTURES

FOR RUSSIAN USERS ONLY

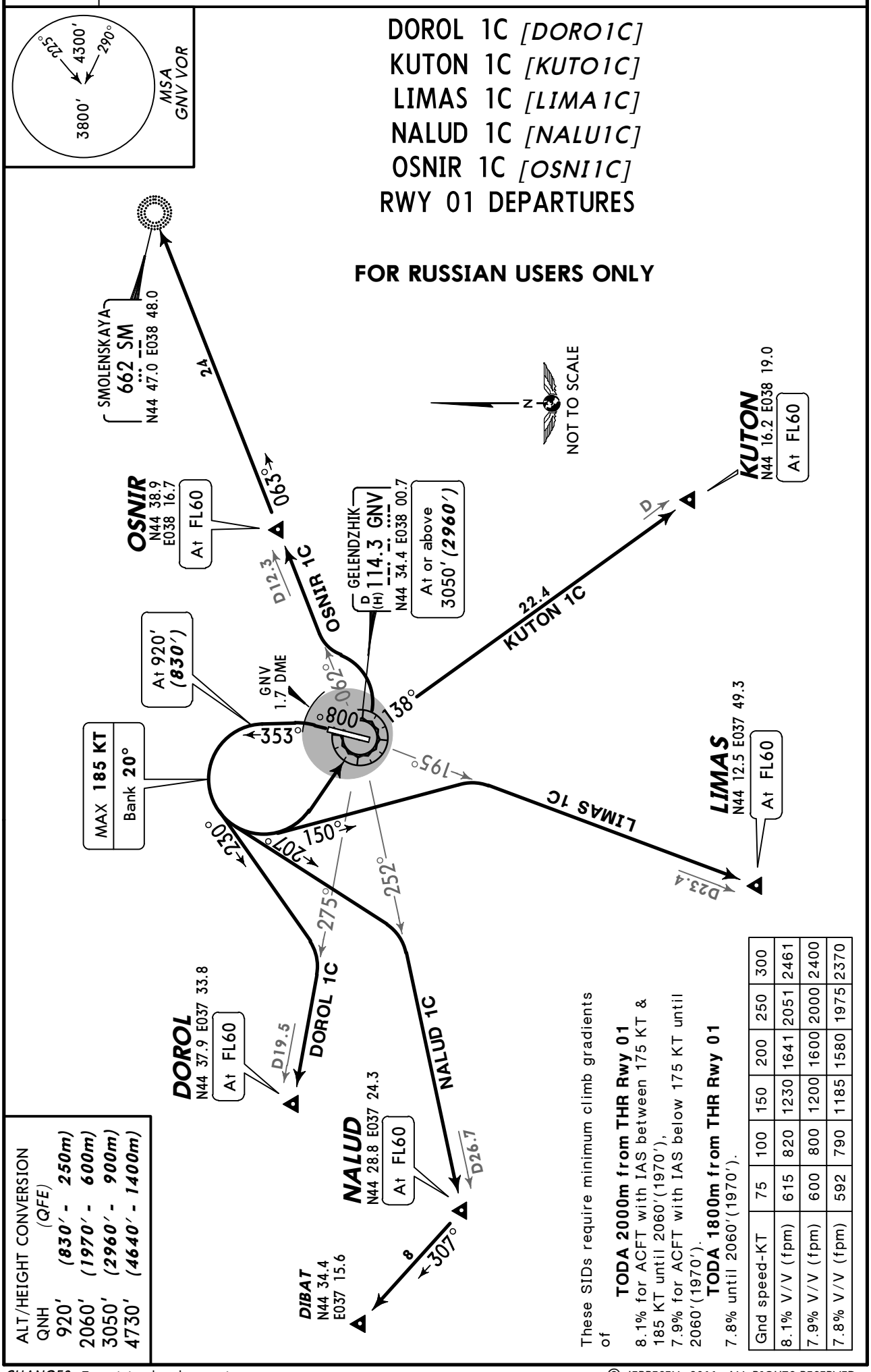

ALT/HEIGHT CONVERSION
(QFE)

QNH	
920′	***(830′ - 250m)***
2060′	***(1970′ - 600m)***
3050′	***(2960′ - 900m)***
4730′	***(4640′ - 1400m)***

These SIDs require minimum climb gradients of

TODA 2000m from THR Rwy 01
8.1% for ACFT with IAS between 175 KT & 185 KT until 2060′(1970′),
7.9% for ACFT with IAS below 175 KT until 2060′(1970′).

TODA 1800m from THR Rwy 01
7.8% until 2060′(1970′).

Gnd speed-KT	75	100	150	200	250	300
8.1% V/V (fpm)	615	820	1230	1641	2051	2461
7.9% V/V (fpm)	600	800	1200	1600	2000	2400
7.8% V/V (fpm)	592	790	1185	1580	1975	2370

CHANGES: Transition level; crossings.

© JEPPESEN, 2011. ALL RIGHTS RESERVED.

ATIS	*GELENDZHIK Tower
134.87 (Russian 133.37)	122.7 Russian only

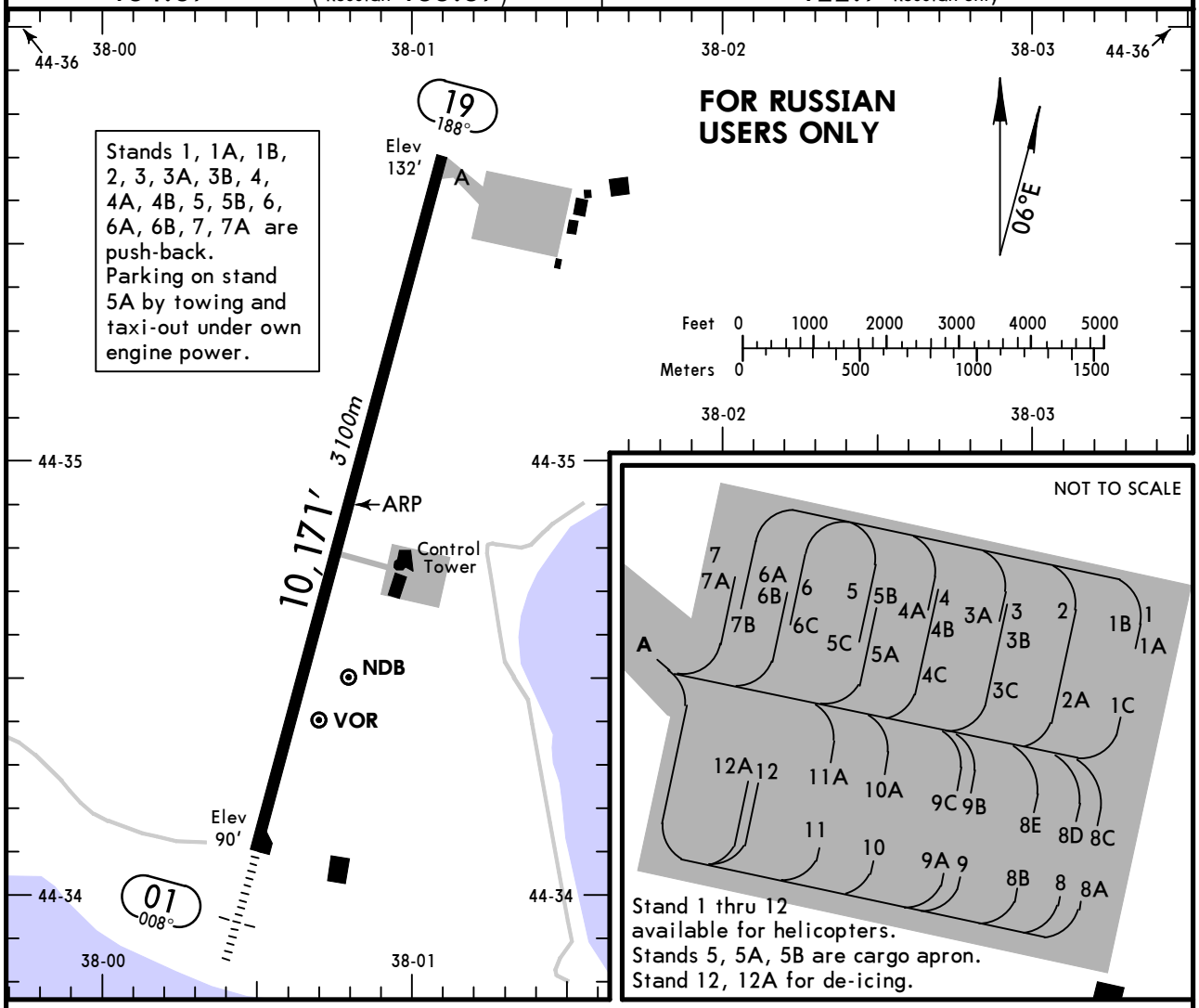

INS COORDINATES

STAND No.	COORDINATES	STAND No.	COORDINATES
1	N44 35.7 E038 01.5	5 thru 6C	N44 35.7 E038 01.3
1A	N44 35.6 E038 01.5	7, 7A, 7B	N44 35.7 E038 01.2
1B	N44 35.7 E038 01.5	8, 8A	N44 35.5 E038 01.4
1C	N44 35.6 E038 01.4	8B thru 9	N44 35.6 E038 01.4
2	N44 35.7 E038 01.4	9A	N44 35.6 E038 01.3
2A	N44 35.6 E038 01.4	9B, 9C	N44 35.6 E038 01.4
3, 3A, 3B	N44 35.7 E038 01.4	10 thru 11A	N44 35.6 E038 01.3
3C	N44 35.6 E038 01.4	12, 12A	N44 35.6 E038 01.2
4, 4A, 4B	N44 35.7 E038 01.3		
4C	N44 35.6 E038 01.3		

ADDITIONAL RUNWAY INFORMATION

RWY					USABLE LENGTHS LANDING BEYOND Threshold	Glide Slope	TAKE-OFF	WIDTH
01	HIRL	ALS	PAPI (angle 2.67°)	RVR		9199′ *2804m*	❶	148′ *45m*
19				RVR	NA			

❶ TAKE OFF RUN AVAILABLE
5906′(1800m) or 6562′(2000m) depending on length of TODA.

TAKE-OFF

	AIR CARRIER (JAA) All Rwys LVP must be in force RCLM (DAY only) or RL	AIR CARRIER (JAA) All Rwys RCLM (DAY only) or RL
A	*250m*	*400m*
B		
C		
D	*300m*	

CHANGES: Stands & coordinates.

© JEPPESEN, 2010, 2012. ALL RIGHTS RESERVED.

STRAIGHT-IN RWY		A	B	C	D
01	ILS ❶ *ALS out*	NOT AUTHORIZED	NOT AUTHORIZED	**615**′(525′) **C2200m** C2400m	**648**′(558′) **C2300m** C2400m
	ILS ❷	NOT AUTHORIZED	NOT AUTHORIZED	**681**′(591′) **C2400m**	**730**′(640′) **C2400m**
	ILS ❸	**468**′(378′) **R1500m**	**566**′(476′) **R1500m**	**730**′(640′) **C2400m**	**910**′(820′) **C2400m**
	LOC	NOT AUTHORIZED	NOT AUTHORIZED	NOT AUTHORIZED	NOT AUTHORIZED
	VOR ❹	**590**′(500′) **R1500m**	**590**′(500′) **R1500m**	**850**′(760′) **C2400m**	**950**′(860′) **C2400m**
	NDB	**1460**′(1370′) **C5000m**	**1460**′(1370′) **C5000m**	**1470**′(1380′) **C5000m**	**1470**′(1380′) **C5000m**

❶ Missed apch climb grad MIM 5.0%.
❷ Missed apch climb grad MIM 4.0%.
❸ Missed apch climb grad MIM 2.5%.
❹ Continuous Descent Final Approach.

TAKE-OFF RWY 01, 19

	LVP must be in force RCLM (DAY only) or RL	RCLM (DAY only) or RL	NIL (DAY only)
A, B, C	250m	400m	500m
D	300m		

© JEPPESEN, 2011. ALL RIGHTS RESERVED.

BRIEFING STRIP

*ATIS	*GELENDZHIK Tower
134.87 (Russian 133.37)	122.7 Russian only

LOC	Final Apch Crs	GS	ILS DA(H)	Apt Elev 132′
IGN *110.1	008°	D6.9 IGN 2060′ (1970′)	Refer to Minimums	RWY 90′

MISSED APCH: As soon as possible CAT A & B: turn RIGHT (CAT B: MAX 145 KT) onto 211°, CAT C & D: turn LEFT (CAT C: MAX 160 KT/CAT D: MAX 185 KT) to intercept CAT A & B: R-166 GNV to D11.3 GNV, CAT C & D: R-218 GNV to D10.3 GNV climbing to 2060′(1970′), then according to chart or as directed.

MSA GNV VOR: 3800′ (225°–290°), 4300′

Alt Set: MM (hPa on req) QNH on req (QFE) Trans level: FL 60 Trans alt: 4730′ (4640′)

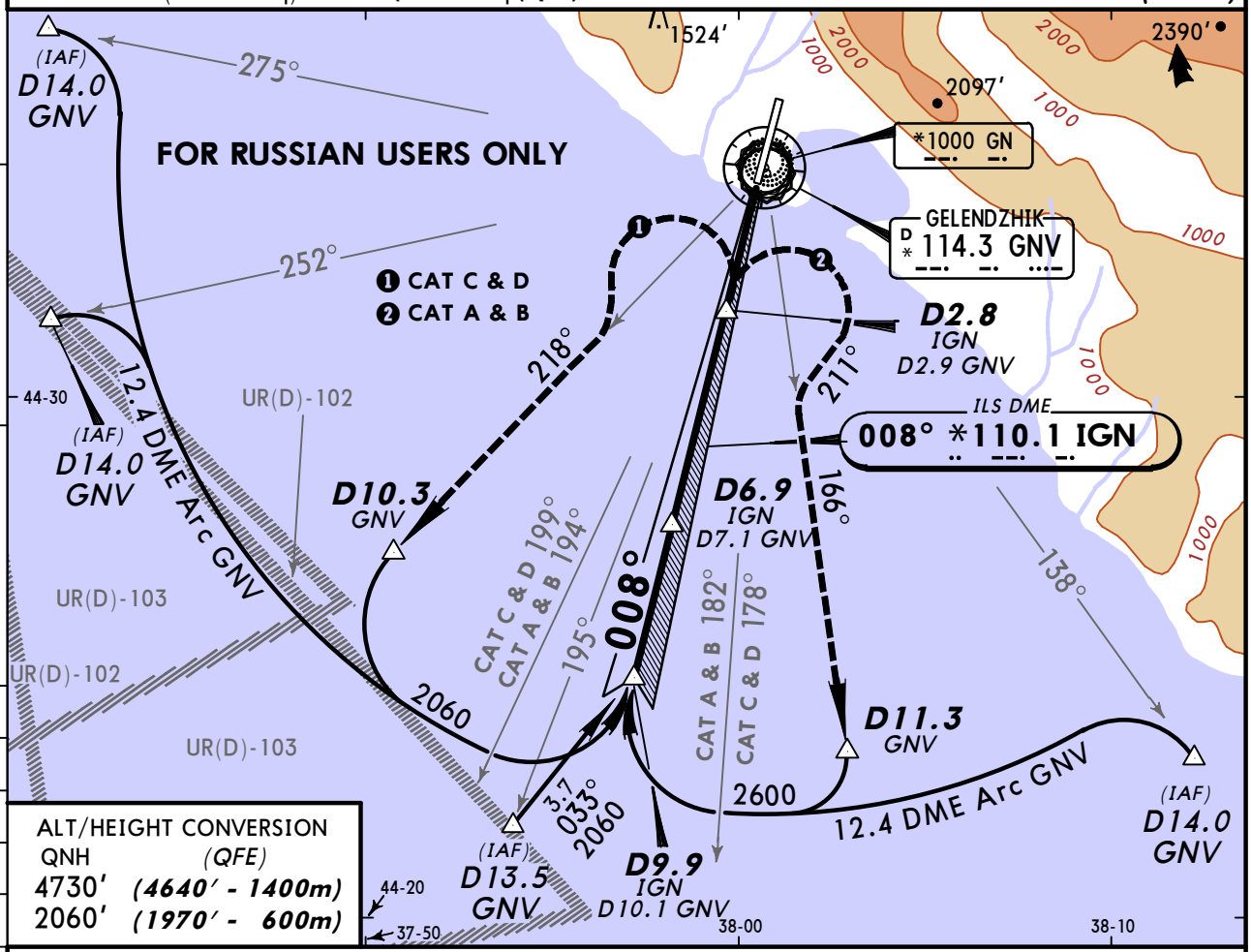

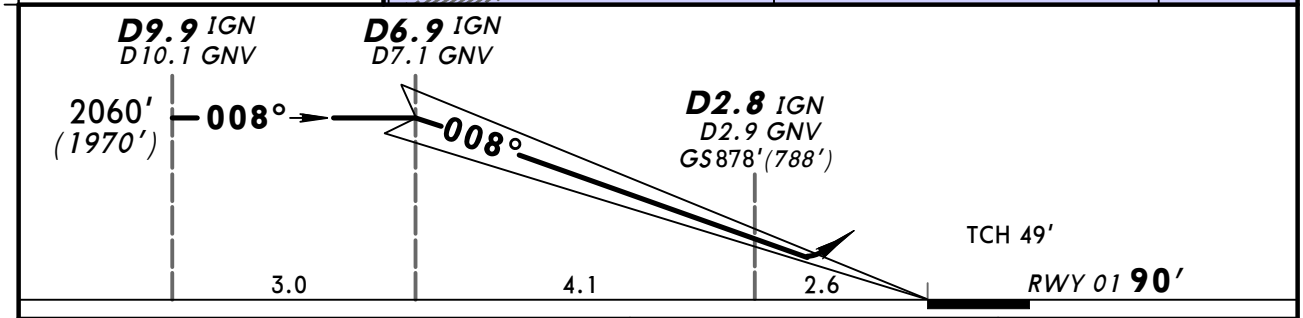

Gnd speed-Kts	70	90	100	120	140	160
GS 2.67°	331	425	472	567	661	756

ALS PAPI

Refer to Missed Apch above

STRAIGHT-IN LANDING RWY 01

	ILS FULL	ILS ALS out	LOC (GS out) FULL	LOC (GS out) ALS out
Missed apch climb grad mim	5.0%	4.0%	2.5%	
DA(H)	C: 615′(525′) D: 648′(558′)	C: 681′(591′) D: 730′(640′)	A: 468′ (378′) B: 566′ (476′) C: 730′ (640′) D: 910′ (820′)	

PANS OPS

	ILS FULL	ILS ALS out	LOC (GS out) FULL	LOC (GS out) ALS out
A	NOT AUTHORIZED	NOT AUTHORIZED	2200m	NOT AUTHORIZED
B			2800m	
C	3100m	3500m	3500m	
D	3300m	3900m	4800m	

CHANGES: Holding withdrawn.

© JEPPESEN, 2011, 2012. ALL RIGHTS RESERVED.

BRIEFING STRIP

*ATIS	*GELENDZHIK Tower
134.87 (Russian 133.37)	122.7 Russian only

LOC	Final Apch Crs	GS	ILS DA(H)	Apt Elev 132′
IGN *110.1	008°	D6.9 IGN 2060′ (1970′)	Refer to Minimums	RWY 90′

MISSED APCH: As soon as possible CAT A,B: turn RIGHT (CAT B: MAX 145 KT), CAT C,D: turn LEFT (CAT C: MAX 160 KT/CAT D: MAX 185 KT) onto 188° climbing to 2060′ (1970′), then as directed.

3800′ 225° 4300′ 290°
MSA GNV VOR

Alt Set: MM (hPa on req) QNH on req (QFE) Trans level: FL 60 Trans alt: 4730′ (4640′)

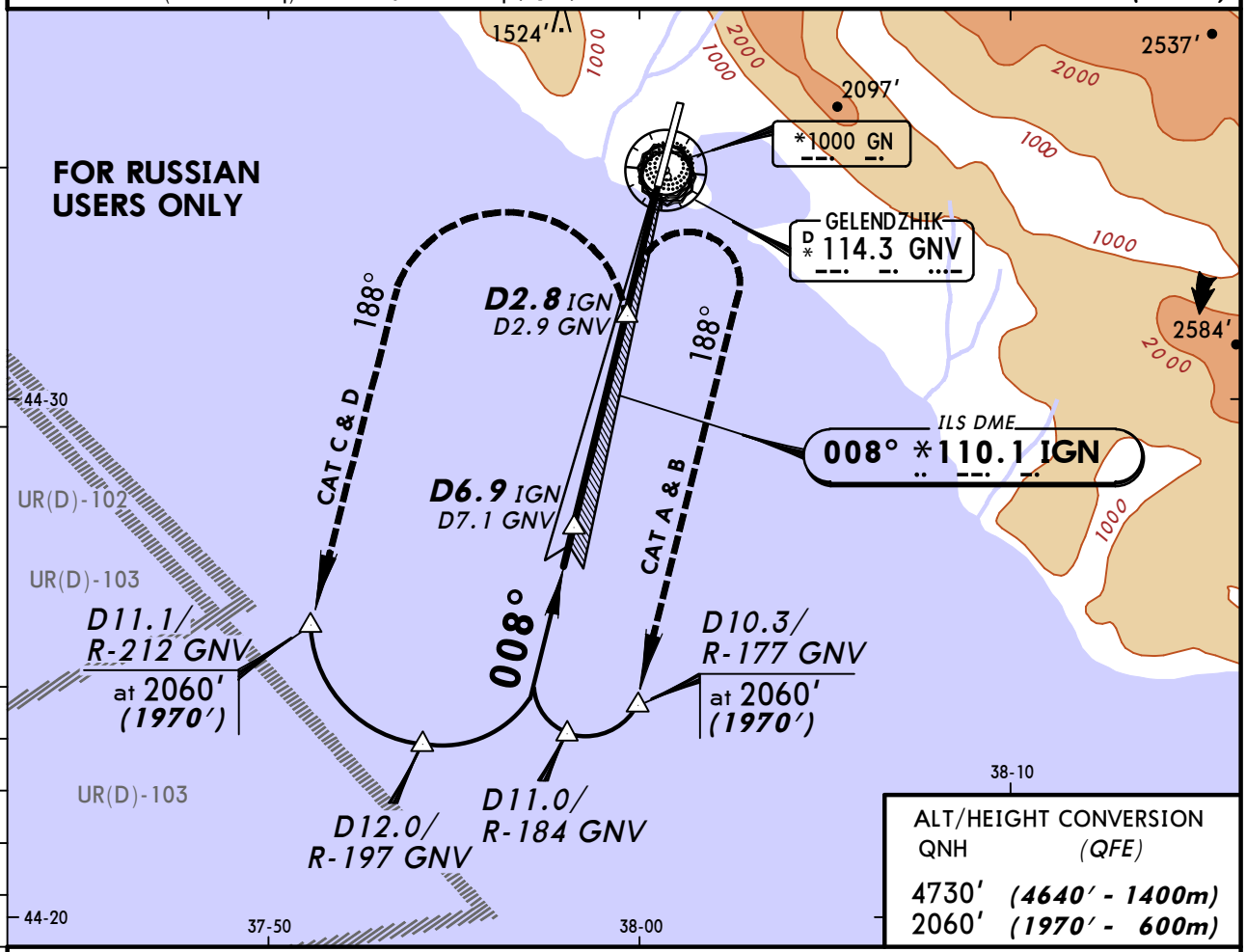

ALT/HEIGHT CONVERSION

QNH	(QFE)
4730′	(4640′ - 1400m)
2060′	(1970′ - 600m)

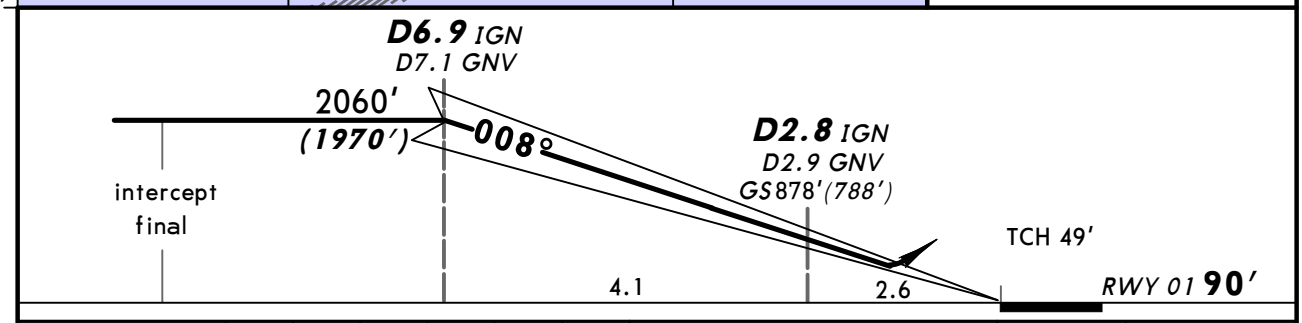

Gnd speed-Kts	70	90	100	120	140	160
GS 2.67°	331	425	472	567	661	756

ALS PAPI

Refer to Missed Apch above

STRAIGHT-IN LANDING RWY 01

	Missed apch climb grad mim 5.0%		ILS Missed apch climb grad mim 4.0%		Missed apch climb grad mim 2.5%		LOC (GS out)
DA(H)	C: 615′ (525′) D: 648′ (558′)		DA(H) C: 681′ (591′) D: 730′ (640′)		DA(H) A: 468′ (378′) B: 566′ (476′) C: 730′ (640′) D: 910′ (820′)		
	FULL	ALS out	FULL	ALS out	FULL	ALS out	
A	NOT AUTHORIZED		NOT AUTHORIZED		2200m		NOT AUTHORIZED
B					2800m		
C	3100m		3500m		3500m		
D	3300m		3900m		4800m		

PANS OPS

CHANGES: Holding withdrawn.

© JEPPESEN, 2010, 2012. ALL RIGHTS RESERVED.

URKG/GDZ
GELENDZHIK

JEPPESEN
2 NOV 12
Eff 15 Nov
11-3
CAT C & D

GELENDZHIK, RUSSIA
via VOR ILS DME Rwy 01

BRIEFING STRIP ™

*ATIS	*GELENDZHIK Tower
134.87 (Russian 133.37)	122.7 Russian only

LOC IGN	Final Apch Crs	GS	ILS DA(H)	Apt Elev 132′
*110.1	008°	D6.9 IGN 2060′ (1970′)	Refer to Minimums	RWY 90′

MISSED APCH: As soon as possible turn LEFT (CAT C: MAX 160 KT/ CAT D: MAX 185 KT) onto 164° to intercept R-209 GNV to D12.7 GNV climbing to 3380′ (3290′), then according to chart or as directed.

MSA GNV VOR: 3800′ (225°–290°), 4300′

Alt Set: MM (hPa on req) | QNH on req (QFE) | Trans level: FL 60 | Trans alt: 4730′ (4640′)

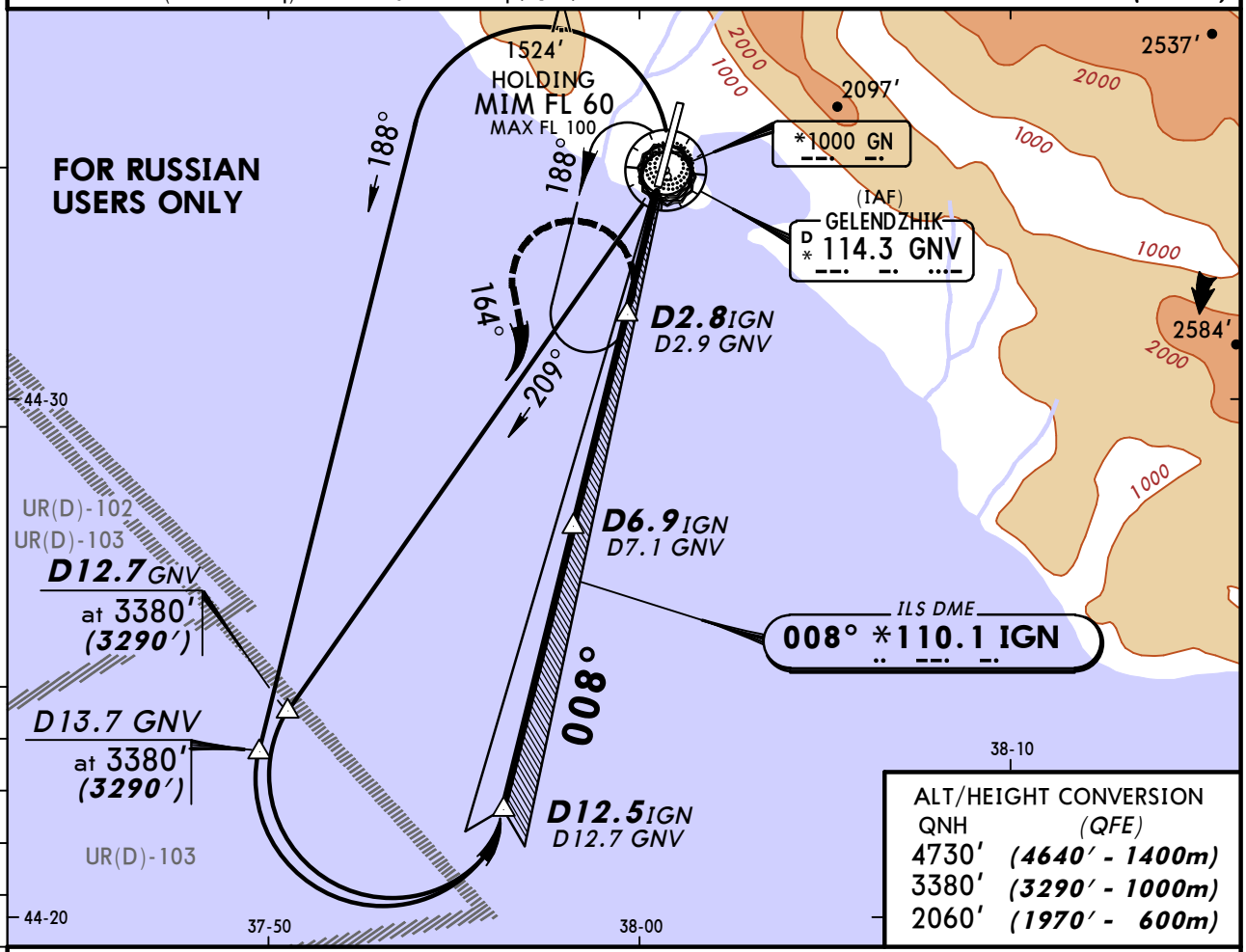

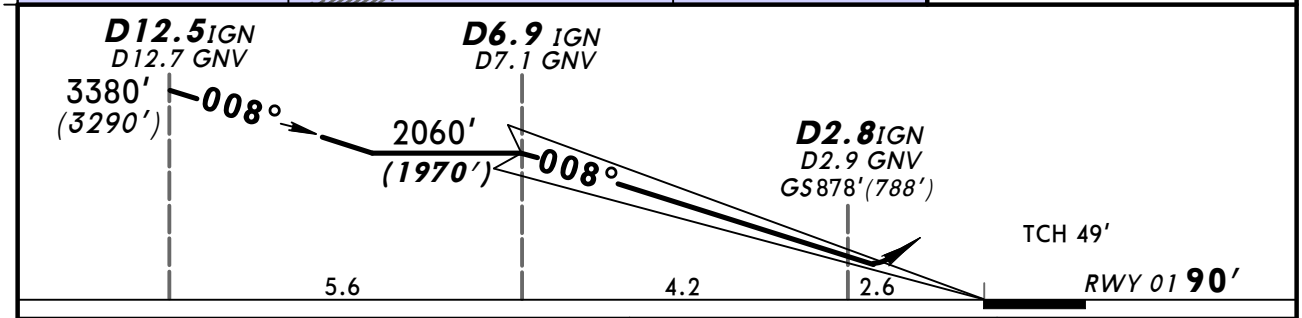

Gnd speed-Kts	70	90	100	120	140	160
GS 2.67°	331	425	472	567	661	756

ALS PAPI

Refer to Missed Apch above

STRAIGHT-IN LANDING RWY 01

	ILS Missed apch climb grad mim 5.0%		ILS Missed apch climb grad mim 4.0%		ILS Missed apch climb grad mim 2.5%		LOC (GS out)
DA(H)	C: 615′ (525′) D: 648′ (558′)		C: 681′ (591′) D: 730′ (640′)		C: 730′ (640′) D: 910′ (820′)		
	FULL	ALS out	FULL	ALS out	FULL	ALS out	
PANS OPS A	NOT AUTHORIZED		NOT AUTHORIZED		NOT AUTHORIZED		NOT AUTHORIZED
PANS OPS B							
PANS OPS C	3100m		3500m		3500m		
PANS OPS D	3300m		3900m		4800m		

CHANGES: Addinational DME reading.

© JEPPESEN, 2010, 2012. ALL RIGHTS RESERVED.

URKG/GDZ
GELENDZHIK

JEPPESEN
2 NOV 12
Eff 15 Nov
(11-4)
CAT A & B

GELENDZHIK, RUSSIA
via VOR ILS DME Rwy 01

BRIEFING STRIP

*ATIS	*GELENDZHIK Tower
134.87 (Russian 133.37)	122.7 Russian only

LOC IGN	Final Apch Crs	GS	ILS DA(H)	Apt Elev 132′
*110.1	008°	D6.9 IGN 2060′ (1970′)	Refer to Minimums	RWY 90′

MISSED APCH: As soon as possible turn RIGHT (CAT B: MAX 145 KT) onto 226° to intercept R-181 GNV to D12.7 GNV climbing to 3380′ (3290′), then according to chart or as directed.

3800′ 225° 4300′ 290°
MSA GNV VOR

Alt Set: MM (hPa on req) | QNH on req (QFE) | Trans level: FL 60 | Trans alt: 4730′ (4640′)

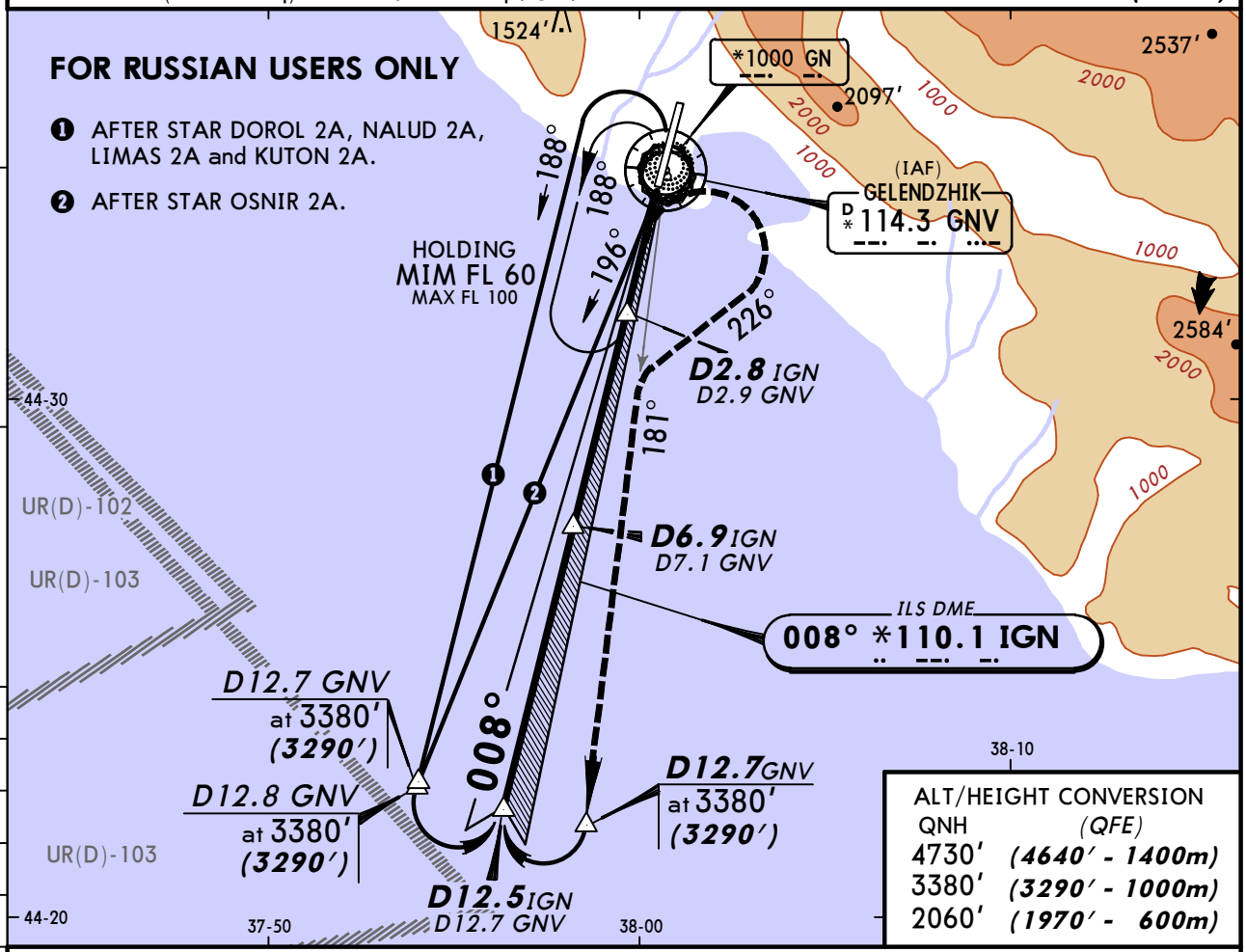

ALT/HEIGHT CONVERSION

QNH	(QFE)
4730′	(4640′ - 1400m)
3380′	(3290′ - 1000m)
2060′	(1970′ - 600m)

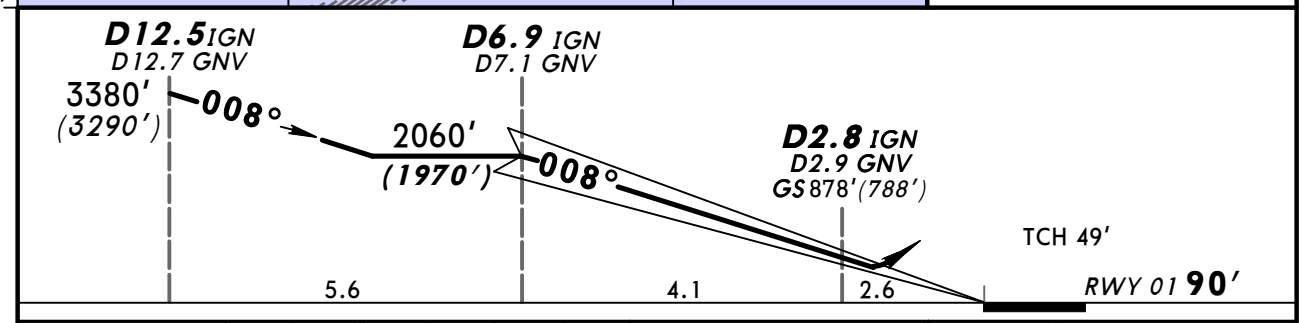

Gnd speed-Kts	70	90	100	120	140	160
GS 2.67°	331	425	472	576	661	756

ALS PAPI
3380′ (3290′) onto 226°
RT

STRAIGHT-IN LANDING RWY 01

ILS	LOC (GS out)
DA(H) A: 468′ (378′) B: 566′ (476′)	
FULL / ALS out	

PANS OPS

A	2200m	NOT AUTHORIZED
B	2800m	
C	NOT AUTHORIZED	
D		

CHANGES: None.

© JEPPESEN, 2010, 2011. ALL RIGHTS RESERVED.

URKG/GDZ
GELENDZHIK

JEPPESEN
2 NOV 12 (13-1) Eff 15 Nov

GELENDZHIK, RUSSIA
via Arc VOR DME Rwy 01

BRIEFING STRIP

*ATIS	*GELENDZHIK Tower
134.87 (Russian 133.37)	122.7 Russian only

VOR	Final Apch Crs	Minimum Alt	MDA(H)	Apt Elev 132′
GNV *114.3	010°	D7.1 2060′ (1970′)	Refer to Minimums	RWY 90′

3800′ 225° 4300′ 290°
MSA GNV VOR

MISSED APCH: As soon as possible CAT A & B: turn RIGHT (CAT B: MAX 145 KT) onto 213°, CAT C & D: turn LEFT (CAT C: MAX 160 KT/CAT D: MAX 200 KT) to intercept CAT A&B: R-168 to D11.3, CAT C&D: R-220 to D10.3 climbing to 2060′(1970′), then according to chart or as directed.

Alt Set: MM (hPa on req) QNH on req (QFE) Trans level: FL 60 Trans alt: 4730′(4640′)
Final approach track offset 2° from rwy centerline.

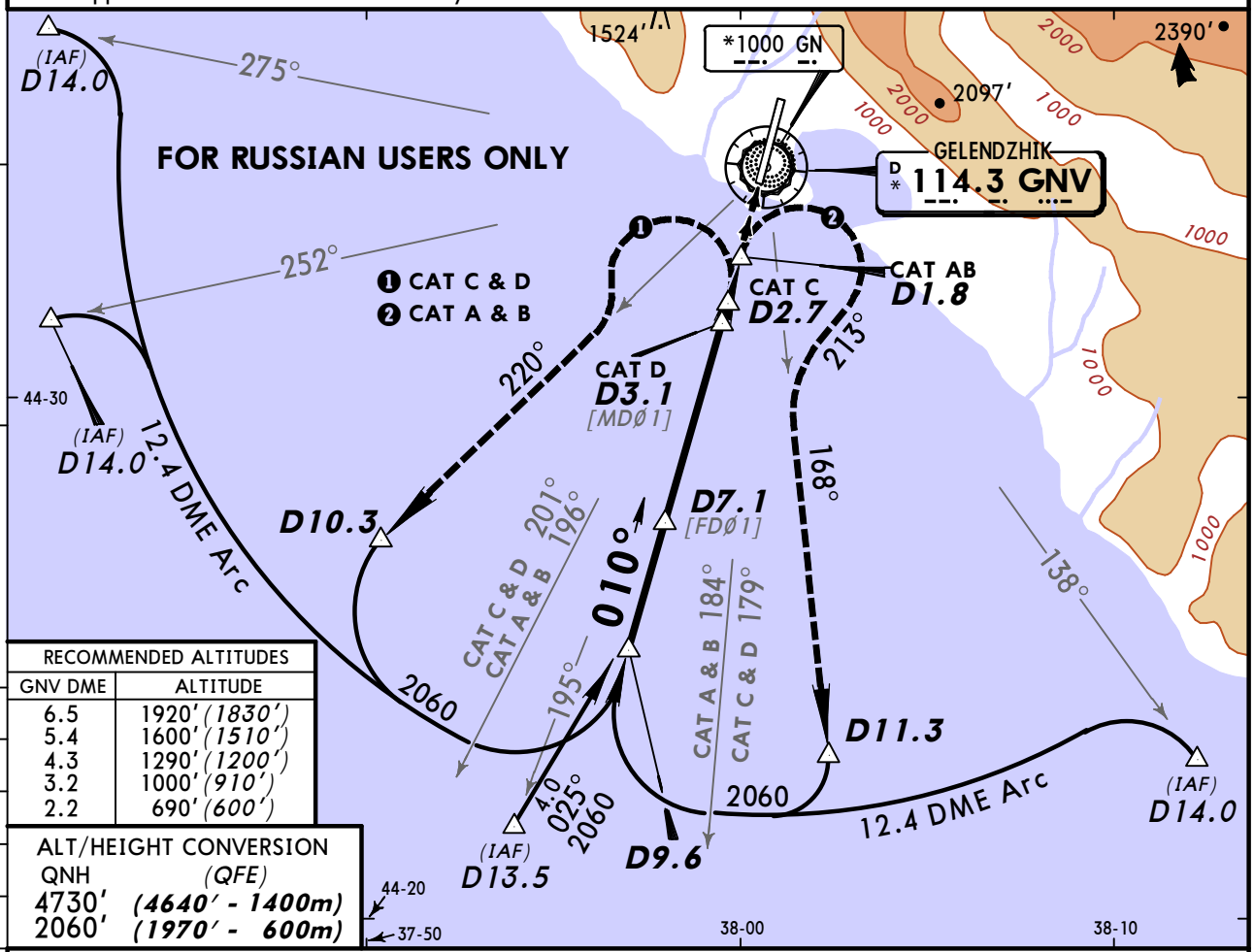

RECOMMENDED ALTITUDES	
GNV DME	ALTITUDE
6.5	1920′ (1830′)
5.4	1600′ (1510′)
4.3	1290′ (1200′)
3.2	1000′ (910′)
2.2	690′ (600′)

ALT/HEIGHT CONVERSION	
QNH	(QFE)
4730′	(4640′ - 1400m)
2060′	(1970′ - 600m)

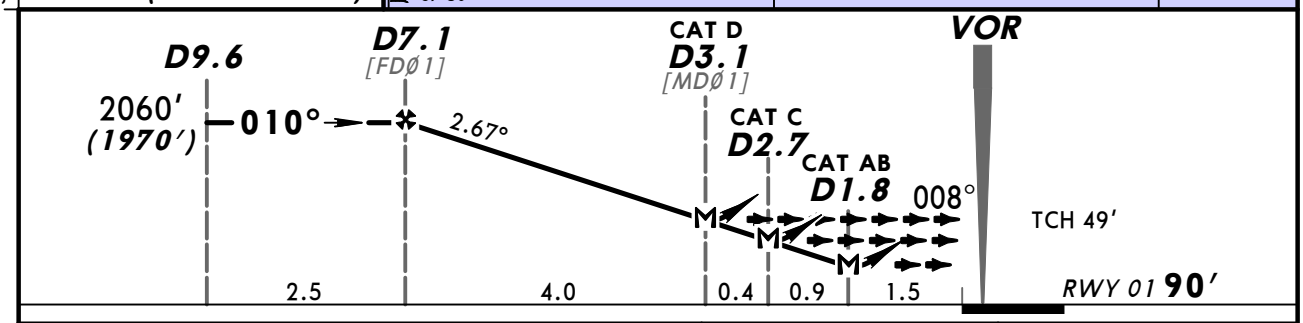

Gnd speed-Kts	70	90	100	120	140	160
Descent Angle 2.67°	331	425	472	567	661	756
MAP at CAT AB: D1.8/ CAT C: D2.7/CAT D: D3.1						

ALS PAPI

Refer to Missed Apch above

STRAIGHT-IN LANDING RWY 01

MDA(H) AB: 590′(500′) C: 850′(760′) D: 950′(860′)

ALS out

PANS OPS

A	3200m
B	
C	3600m
D	4400m

CHANGES: Missed apch. Holding withdrawn. Arrival bearing.

© JEPPESEN, 2011, 2012. ALL RIGHTS RESERVED.

BRIEFING STRIP

*ATIS	*GELENDZHIK Tower
134.87 (Russian 133.37)	122.7 Russian only

VOR	Final Apch Crs	Minimum Alt	MDA(H)	Apt Elev 132′
GNV *114.3	010°	D7.1 2060′(1970′)	Refer to Minimums	RWY 90′

MISSED APCH: CAT A & B: Turn RIGHT (CAT B: MAX 145 KT), CAT C & D: turn LEFT (CAT C: MAX 160 KT/CAT D: MAX 200 KT) onto 190° climbing to 2060′(1970′), then according to chart or as directed.

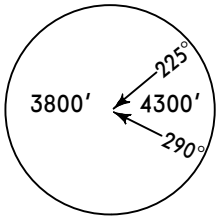

MSA GNV VOR

Alt Set: MM (hPa on req) QNH on req (QFE) Trans level: FL 60 Trans alt: 4730′(4640′)
Final approach track offset 2° from rwy centerline.

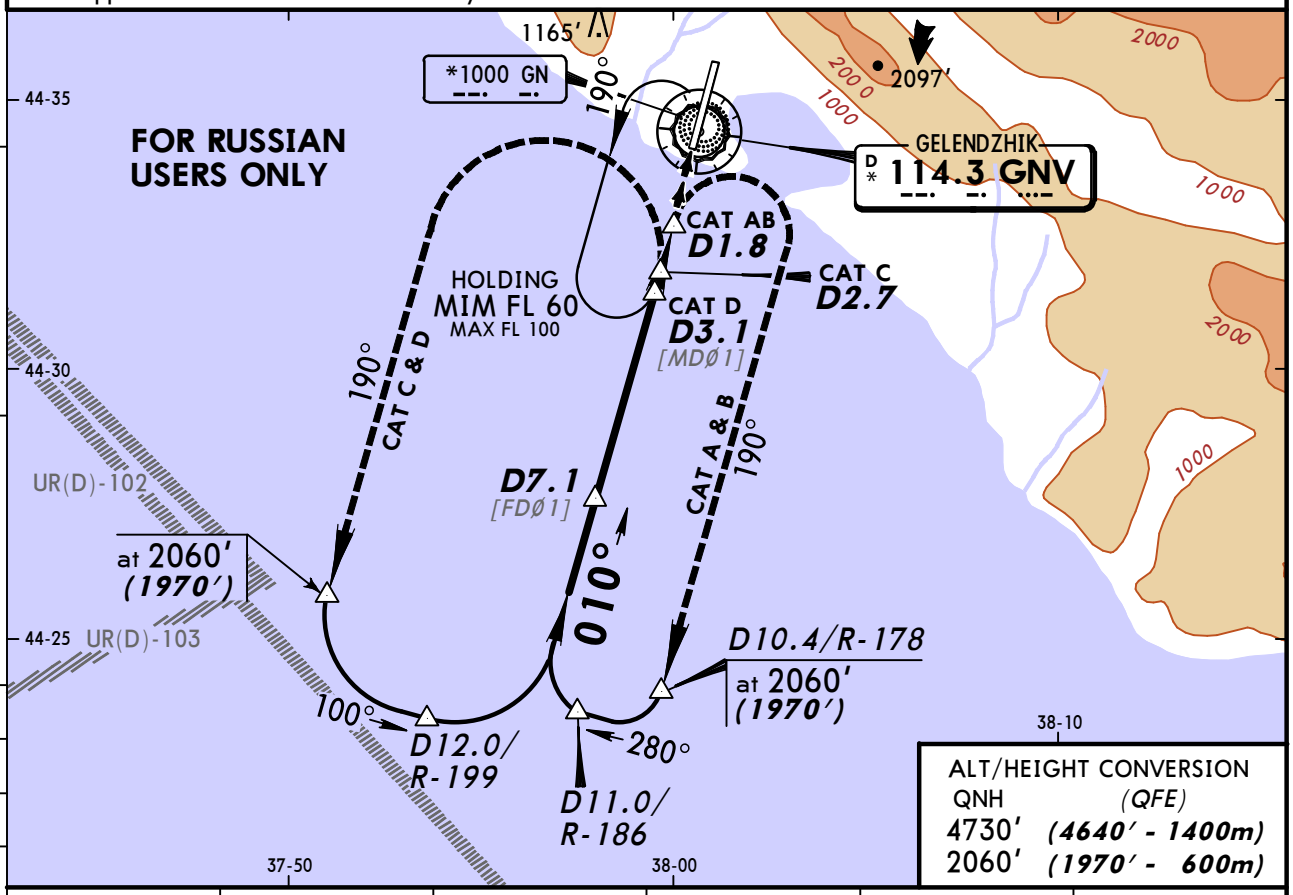

GNV DME	6.5	5.4	4.3	3.2	2.2
ALTITUDE	1920′(1830′)	1600′(1510′)	1290′(1200′)	1000′(910′)	690′(600′)

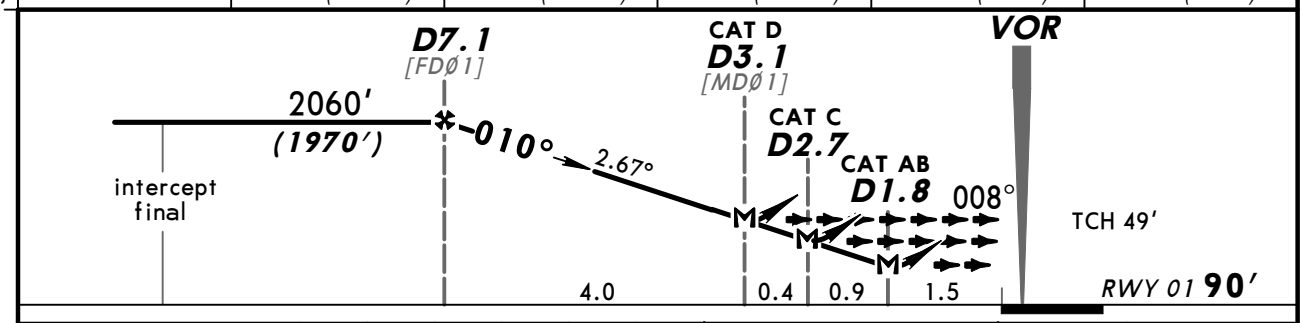

Gnd speed-Kts	70	90	100	120	140	160
Descent Angle 2.67°	331	425	472	567	661	756
MAP at CAT AB: D1.8/ CAT C: D2.7/CAT D: D3.1						

ALS PAPI

Refer to Missed Apch above

STRAIGHT-IN LANDING RWY 01

MDA(H) AB: 590′(500′) C: 850′(760′) D: 950′(860′)

ALS out

PANS OPS

A	3200m
B	
C	3600m
D	4400m

CHANGES: None.

© JEPPESEN, 2010, 2011. ALL RIGHTS RESERVED.

URKG/GDZ
GELENDZHIK

JEPPESEN
23 DEC 11 (13-3) CAT C & D

GELENDZHIK, RUSSIA
via VOR VOR DME Rwy 01

BRIEFING STRIP

*ATIS	*GELENDZHIK Tower
134.87 (Russian 133.37)	122.7 Russian only

VOR	Final Apch Crs	Minimums Alt	MDA(H)	Apt Elev 132′
GNV *114.3	010°	D7.1 2060′ (1970′)	Refer to Minimums	RWY 90′

MISSED APCH: Turn LEFT (CAT C: MAX 160 KT/CAT D: MAX 200 KT) onto 166° to intercept R-211 to D12.7 climbing to 3380′ (3290′), then according to chart or as directed.

3800′ 225° 4300′ 290°
MSA GNV VOR

Alt Set: MM (hPa on req) QNH on req (QFE) Trans level: FL 60 Trans alt: 4730′ (4640′)

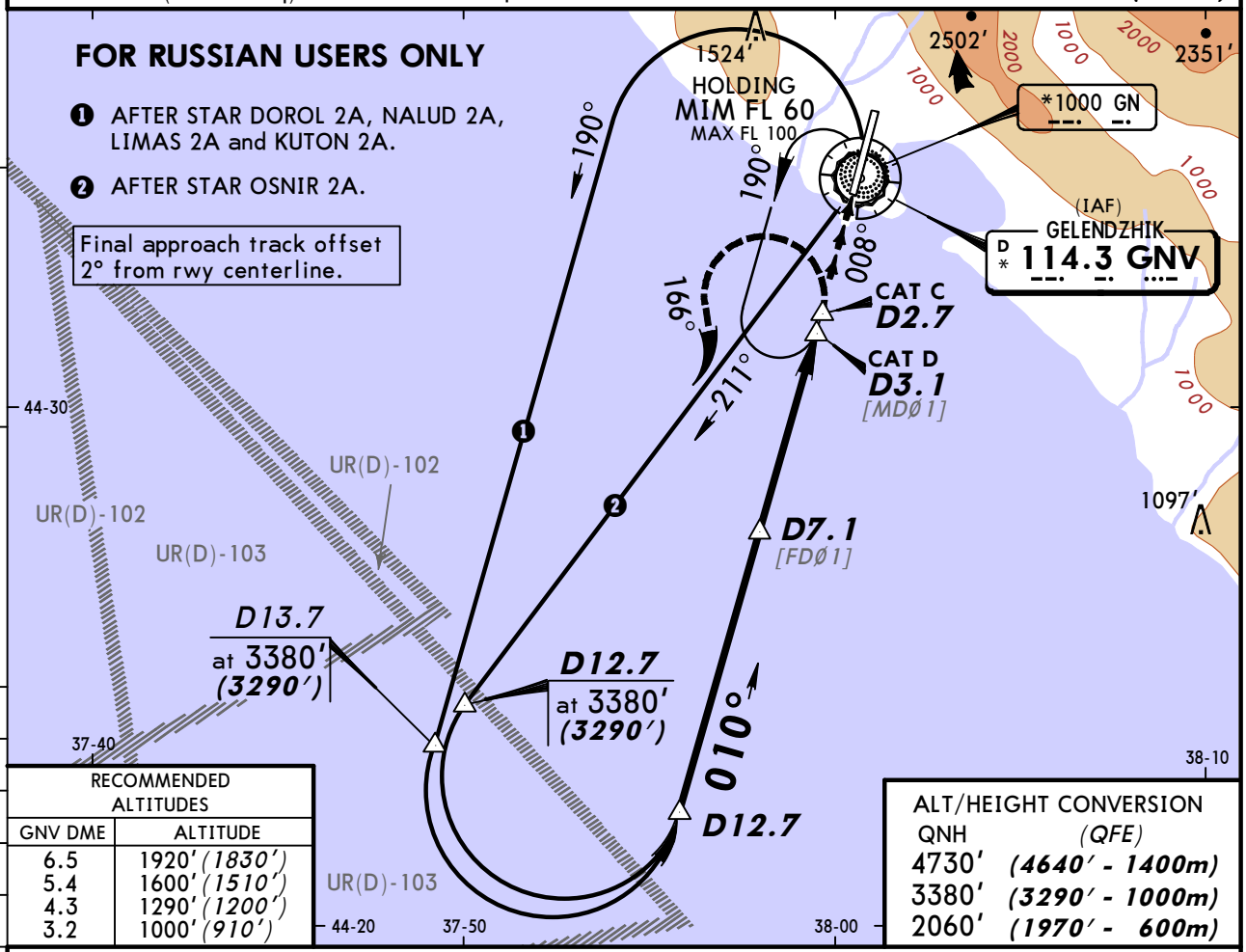

RECOMMENDED ALTITUDES	
GNV DME	ALTITUDE
6.5	1920′ (1830′)
5.4	1600′ (1510′)
4.3	1290′ (1200′)
3.2	1000′ (910′)

ALT/HEIGHT CONVERSION	
QNH	(QFE)
4730′	(4640′ - 1400m)
3380′	(3290′ - 1000m)
2060′	(1970′ - 600m)

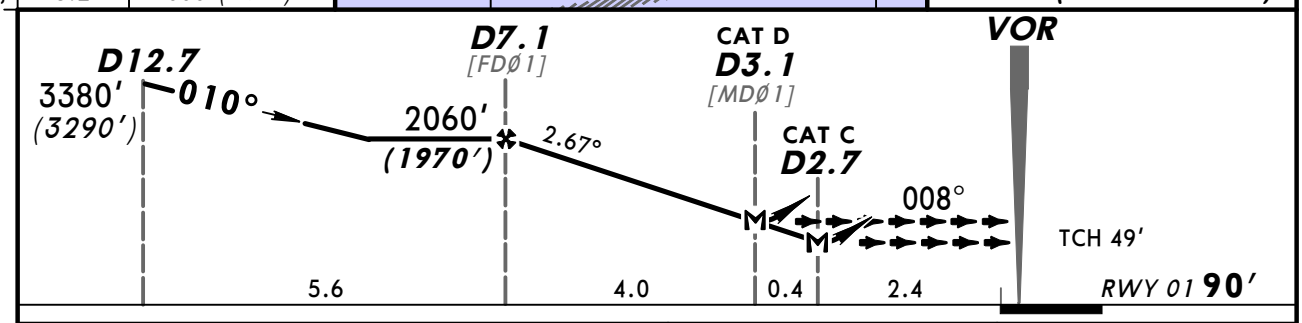

Gnd speed-Kts	70	90	100	120	140	160
Descent angle 2.67°	331	425	472	567	661	756
MAP at CAT C: D2.7/ CAT D: D3.1						

ALS PAPI

Refer to Missed Apch above

STRAIGHT-IN LANDING RWY 01

MDA(H) C: 850′ (760′)
D: 950′ (860′)

ALS out

PANS OPS

A	NOT AUTHORIZED
B	
C	3600m
D	4400m

CHANGES: Communications. Trans level. Holding altitude.

© JEPPESEN, 2010, 2011. ALL RIGHTS RESERVED.

URKG/GDZ
GELENDZHIK

JEPPESEN
23 DEC 11 (13-4) CAT A & B

GELENDZHIK, RUSSIA
via VOR VOR DME Rwy 01

BRIEFING STRIP

*ATIS	*GELENDZHIK Tower
134.87 (Russian 133.37)	122.7 Russian only

VOR	Final Apch Crs	Minimums Alt	MDA(H)	Apt Elev 132′
GNV *114.3	010°	D7.1 2060′ (1970′)	590′ (500′)	RWY 90′

MISSED APCH: Turn RIGHT (CAT B: MAX 145 KT) onto 227° to intercept R-182 to D12.7 climbing to 3380′ (3290′), then according to chart or as directed.

3800′ 225° 4300′ 290°
MSA GNV VOR

Alt Set: MM (hPa on req) QNH on req (QFE) Trans level: FL 60 Trans alt: 4730′ (4640′)

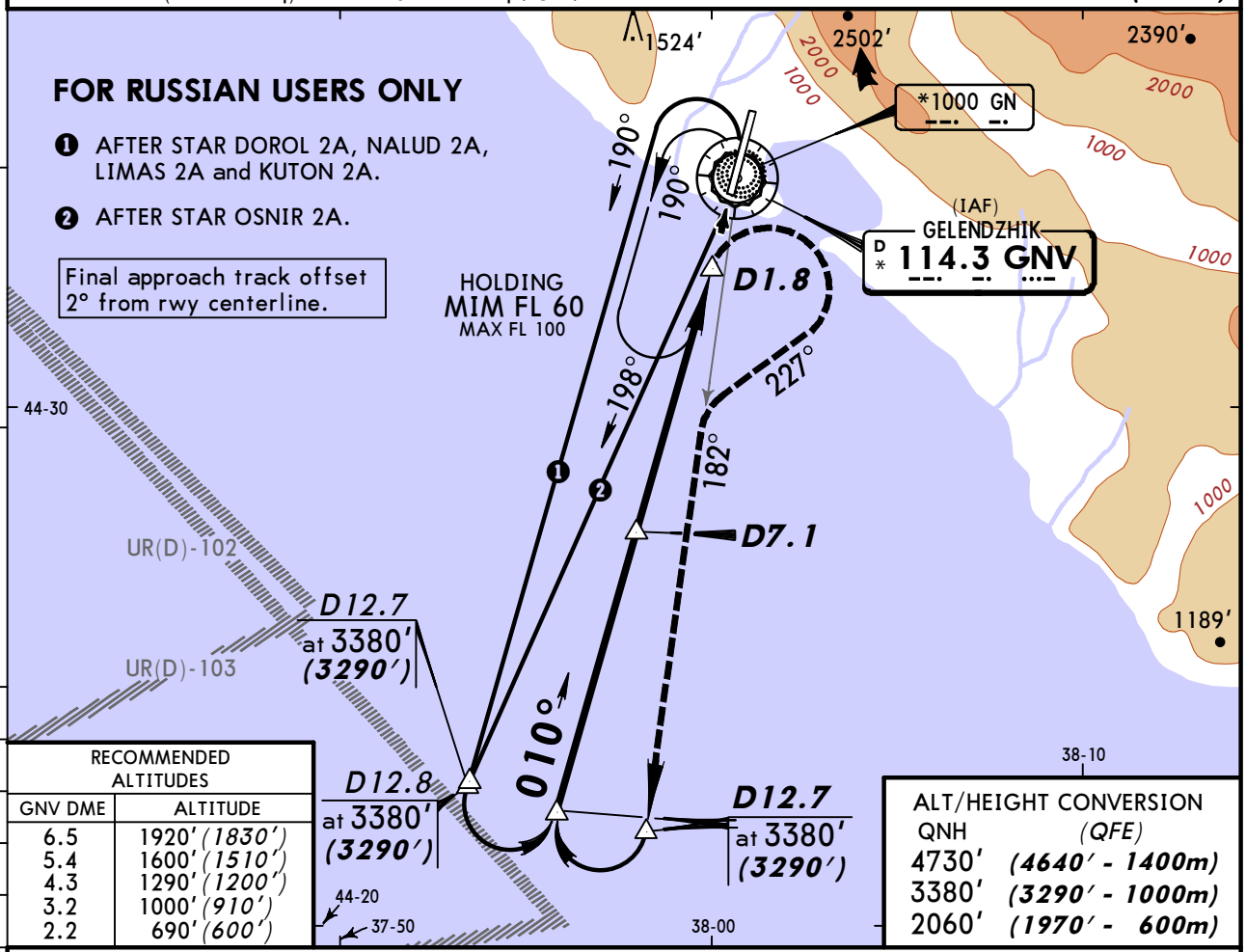

RECOMMENDED ALTITUDES	
GNV DME	ALTITUDE
6.5	1920′ (1830′)
5.4	1600′ (1510′)
4.3	1290′ (1200′)
3.2	1000′ (910′)
2.2	690′ (600′)

ALT/HEIGHT CONVERSION	
QNH	(QFE)
4730′	(4640′ - 1400m)
3380′	(3290′ - 1000m)
2060′	(1970′ - 600m)

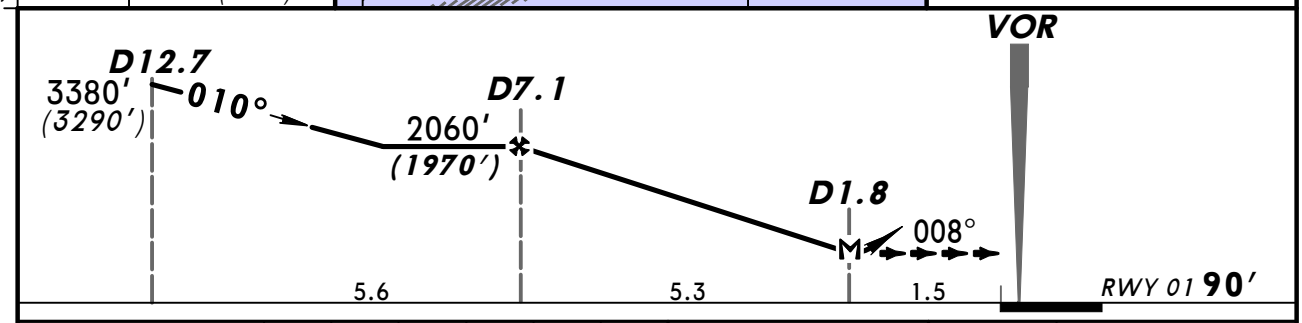

Gnd speed-Kts	70	90	100	120	140	160
Descent angle 2.67°	331	425	472	567	661	756
MAP at D1.8						

ALS PAPI
3380′ (3290′) onto 227° RT

STRAIGHT-IN LANDING RWY 01

MDA(H) 590′ (500′)

ALS out

PANS OPS

A	3200m
B	
C	NOT AUTHORIZED
D	

CHANGES: Communications. Trans level. Holding altitude.

© JEPPESEN, 2010, 2011. ALL RIGHTS RESERVED.

BRIEFING STRIP ™

*ATIS	*GELENDZHIK Tower
134.87 (Russian 133.37)	122.7 Russian only

NDB	Final Apch Crs	Minimums Alt	MDA(H)	Apt Elev 132′
GN *1000	011°	No FAF	Refer to Minimums	RWY 90′

MISSED APCH: Turn LEFT (CAT C & D: MAX 205 KT, BANK 20°) onto 191° climbing to 3380′ *(3290′)*, then according to chart or as directed.

3800′ 225° 4300′ 290°
MSA GNV VOR

Alt Set: MM (hPa on req) QNH on req **(QFE)** Trans level: FL 60 Trans alt: 4730′ ***(4640′)***
Final approach track offset 3° from rwy centerline.

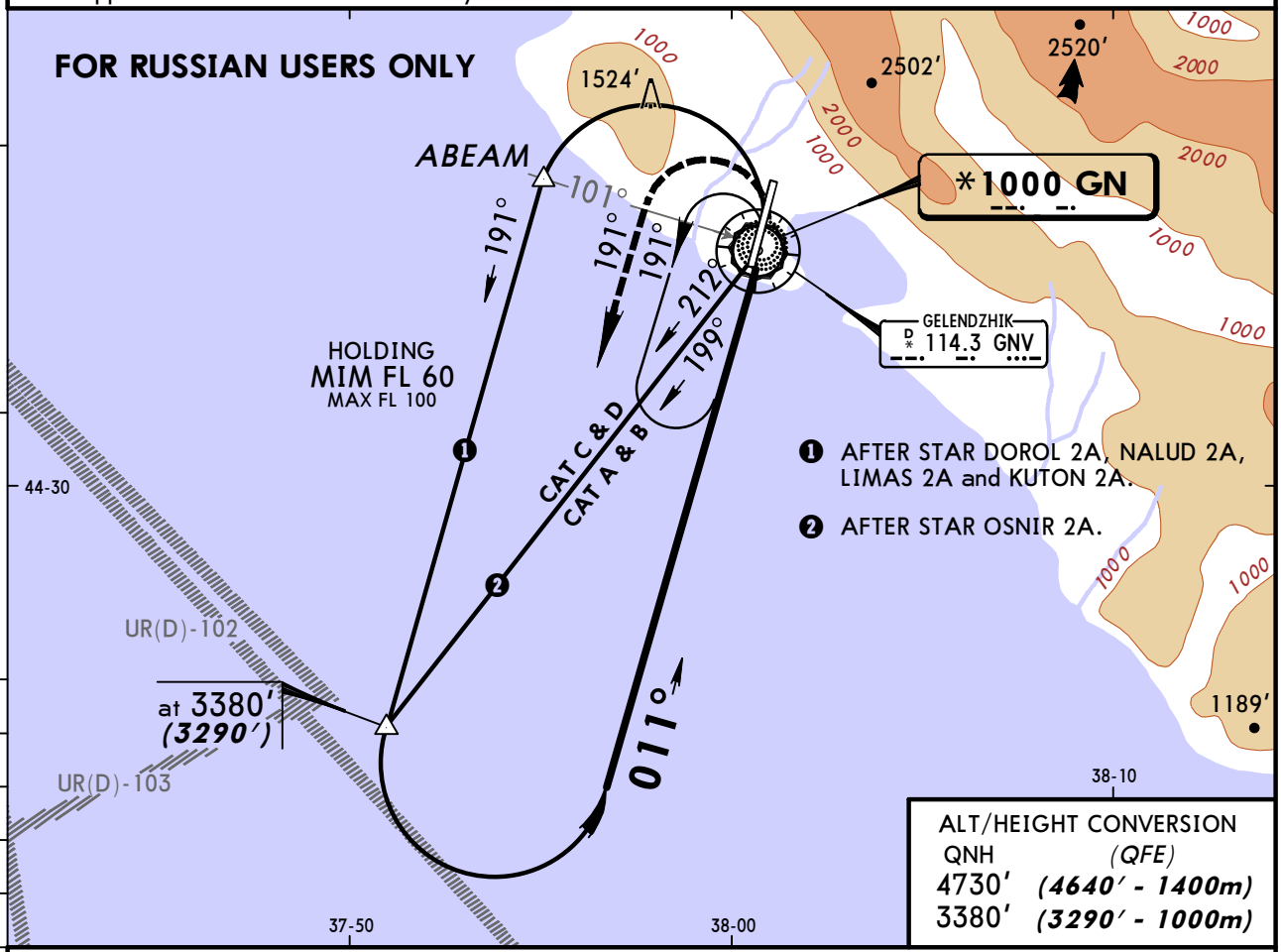

ALT/HEIGHT CONVERSION

QNH	(QFE)
4730′	***(4640′ - 1400m)***
3380′	***(3290′ - 1000m)***

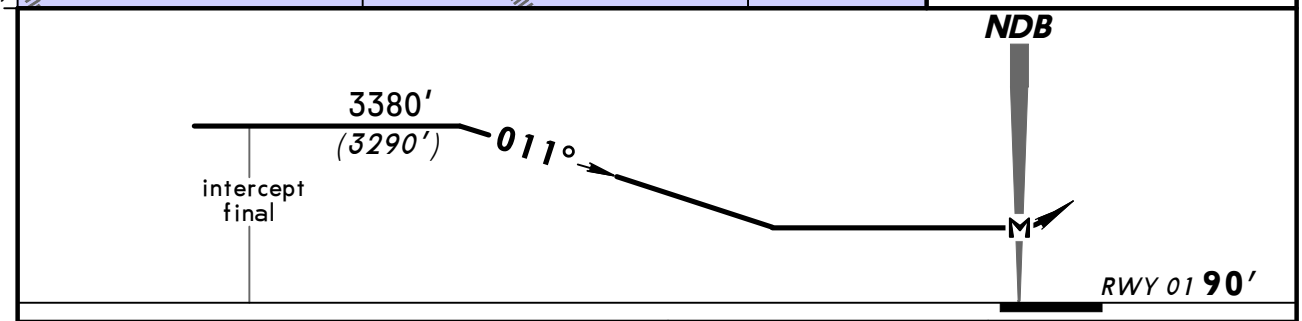

Gnd speed-Kts	70	90	100	120	140	160
Descent angle 2.67°	331	425	472	567	661	756
MAP at NDB						

ALS PAPI

Refer to Missed Apch above

STRAIGHT-IN LANDING RWY **01**

MDA(H) AB: 1460′ ***(1370′)***
CD: 1470′ ***(1380′)***

ALS out

PANS OPS

A	4800m
B	
C	
D	

CHANGES: Communications. Trans level. Holding altitude.

© JEPPESEN, 2010, 2011. ALL RIGHTS RESERVED.

(c) JEPPESEN SANDERSON, INC., 2014, ALL RIGHTS RESERVED

JEPPESEN
JeppView for Windows

Chart changes since cycle 26-2013

ADD = added chart, REV = revised chart, DEL = deleted chart.

ACT	PROCEDURE IDENT	INDEX	REV DATE	EFF DATE

GELENDZHIK, (GELENDZHIK - URKG)

(c) JEPPESEN SANDERSON, INC., 2014, ALL RIGHTS RESERVED

TERMINAL CHART CHANGE NOTICES

No Chart Change Notices for Airport URKG