(c) JEPPESEN SANDERSON, INC., 2014, ALL RIGHTS RESERVED


# List of pages in this Trip Kit

Trip Kit Index
Airport Information For UMGG
Terminal Charts For UMGG
Revision Letter For Cycle 01-2014
Change Notices
Notebook

(c) JEPPESEN SANDERSON, INC., 2014, ALL RIGHTS RESERVED


## General Information

Location: Homiel Blr
IATA Code: GME
Lat/Long: N52° 31.6' E031° 01.0'
Elevation: 471 ft

Airport Use: Public
Magnetic Variation: 7.7°E

Fuel Types: Jet A-1
Repair Types: Minor Airframe, Minor Engine
Customs: Yes
Airport Type: IFR
Landing Fee: Yes
Control Tower: Yes
Jet Start Unit: No
LLWS Alert: No
Beacon: No

Sunrise: 0606 Z
Sunset: 1358 Z,

## Runway Information

Runway: 10
Length x Width: 8428 ft x 141 ft
Surface Type: asphalt
TDZ-Elev: 461 ft
Lighting: Edge, ALS

Runway: 28
Length x Width: 8428 ft x 141 ft
Surface Type: asphalt
TDZ-Elev: 468 ft
Lighting: Edge, ALS

## Communication Information

ATIS 124.475 Non-English
ATIS 119.55
Homiel Tower 118.1
Homiel Approach Control 126.1 VHF-DF

| ATIS | Apt Elev | |
|---|---|---|
| 119.55 (Russian 124.47) | 471′ | Alt Set: hPa<br>Trans level: By ATC Trans alt: 6000′ |

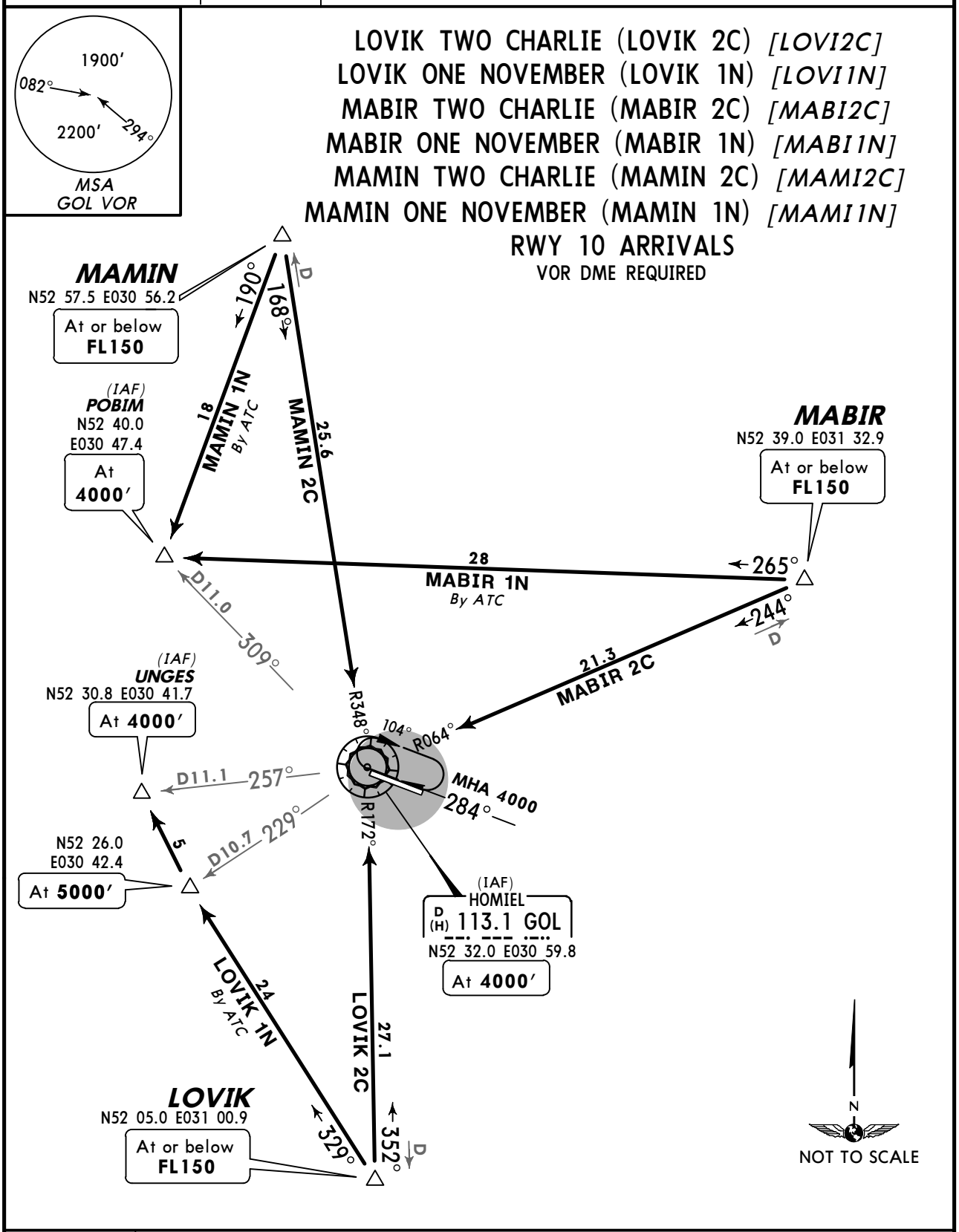


| STAR | ROUTING |
|---|---|
| **LOVIK 2C** | Intercept GOL R-172 inbound to GOL. |
| **LOVIK 1N** By ATC | On 329° track to UNGES. |
| **MABIR 2C** | Intercept GOL R-064 inbound to GOL. |
| **MABIR 1N** By ATC | On 265° track to POBIM. |
| **MAMIN 2C** | Intercept GOL R-348 inbound to GOL. |
| **MAMIN 1N** By ATC | On 190° track to POBIM. |

*CHANGES:* STARs completely revised.

© JEPPESEN, 2013. ALL RIGHTS RESERVED.

| ATIS | Apt Elev | |
|---|---|---|
| 119.55 (Russian 124.47) | 471′ | Alt Set: hPa<br>Trans level: By ATC Trans alt: 6000′ |

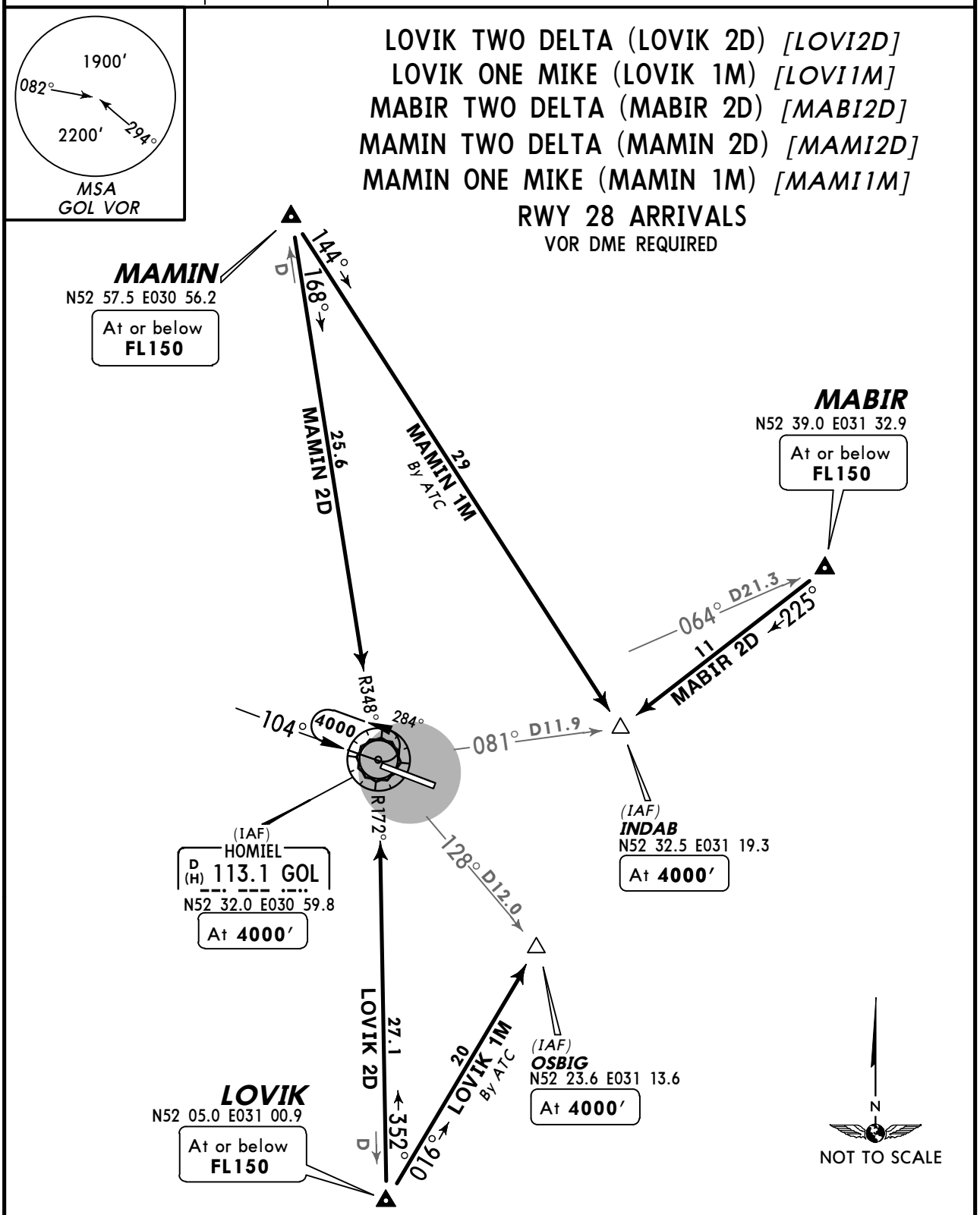


| STAR | ROUTING |
|---|---|
| LOVIK 2D | Intercept GOL R-172 inbound to GOL. |
| LOVIK 1M By ATC | On 016° track to OSBIG. |
| MABIR 2D | On 225° track to INDAB. |
| MAMIN 2D | Intercept GOL R-348 inbound to GOL. |
| MAMIN 1M By ATC | On 114° track to INDAB. |

*CHANGES:* STARs completely revised.

© JEPPESEN, 2013. ALL RIGHTS RESERVED.

| ATIS | Apt Elev | |
|---|---|---|
| 119.55 (Russian 124.47) | 471′ | Alt Set: hPa<br>Trans level: By ATC Trans alt: 6000′ |

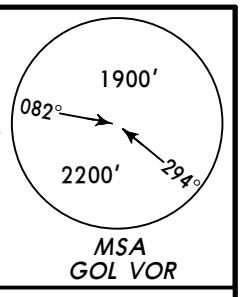


# GOGER TWO CHARLIE (GOGER 2C) *[GOGE2C]*
# GORUL TWO CHARLIE (GORUL 2C) *[GORU2C]*
# ROMAL TWO CHARLIE (ROMAL 2C) *[ROMA2C]*
# ROMAL ONE NOVEMBER (ROMAL 1N) *[ROMA1N]*
## RWY 10 ARRIVALS
VOR DME REQUIRED

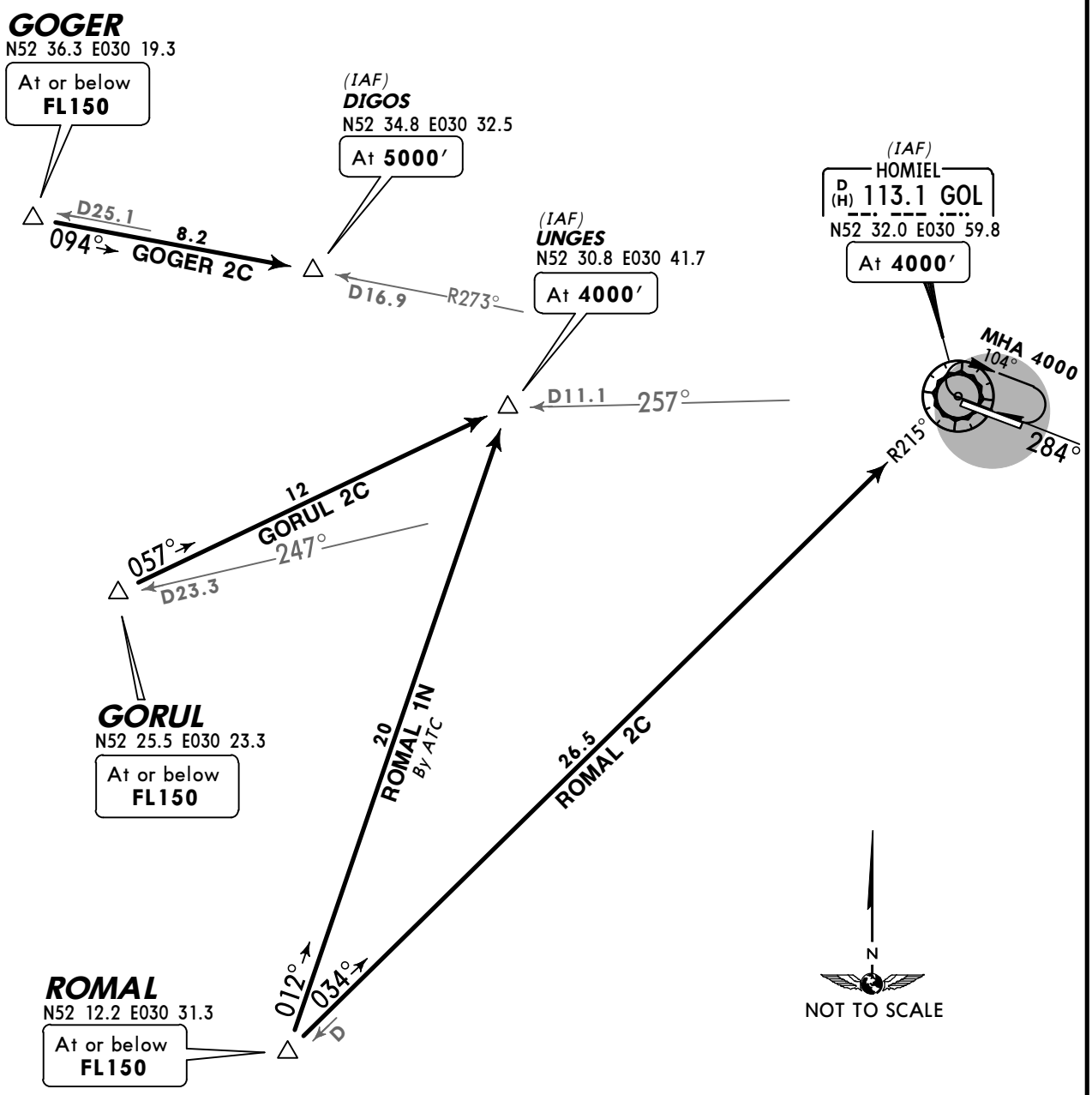


| STAR | ROUTING |
|---|---|
| GOGER 2C | On 094° track to DIGOS. |
| GORUL 2C | On 057° track to UNGES. |
| ROMAL 2C | Intercept GOL R-215 inbound to GOL. |
| ROMAL 1N By ATC | On 012° track to UNGES. |

*CHANGES:* STARs completely revised.

© JEPPESEN, 2013. ALL RIGHTS RESERVED.

| ATIS | Apt Elev | | |
|---|---|---|---|
| 119.55 (Russian 124.47) | 471′ | Alt Set: hPa<br>Trans level: By ATC | Trans alt: 6000′ |

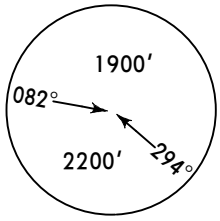


MSA
GOL VOR

# GOGER TWO DELTA (GOGER 2D) *[GOGE2D]*
# GORUL TWO DELTA (GORUL 2D) *[GORU2D]*
# GORUL ONE MIKE (GORUL 1M) *[GORU1M]*
# ROMAL TWO DELTA (ROMAL 2D) *[ROMA2D]*
# ROMAL ONE MIKE (ROMAL 1M) *[ROMA1M]*
## RWY 28 ARRIVALS
VOR DME REQUIRED

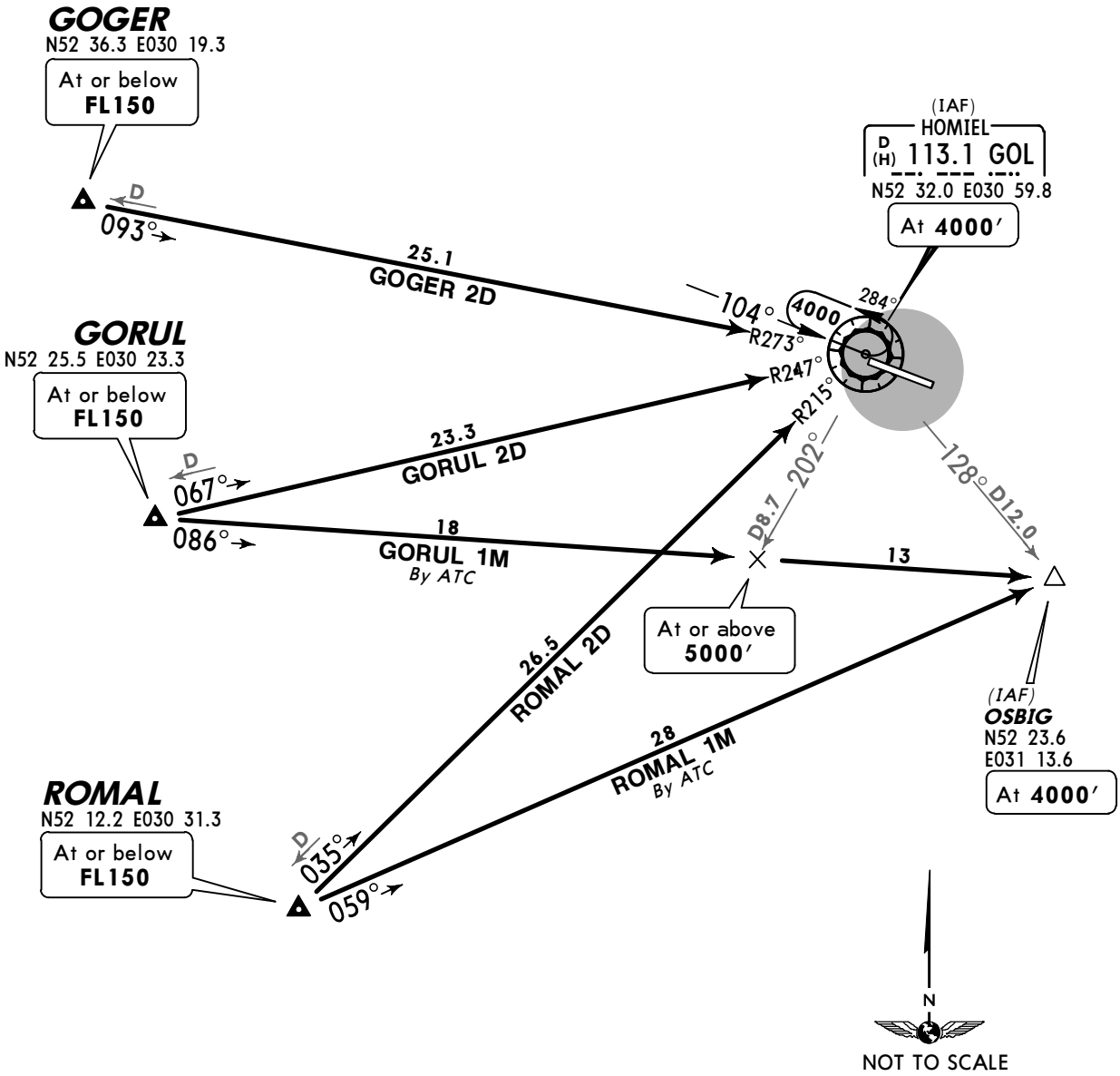


| STAR | ROUTING |
|---|---|
| GOGER 2D | Intercept GOL R-273 inbound to GOL. |
| GORUL 2D | Intercept GOL R-247 inbound to GOL. |
| GORUL 1M By ATC | On 086° track to OSBIG. |
| ROMAL 2D | Intercept GOL R-215 inbound to GOL. |
| ROMAL 1M By ATC | On 059° track to OSBIG. |

*CHANGES:* STARs completely revised.

© JEPPESEN, 2013. ALL RIGHTS RESERVED.

| Apt Elev 471′ | Trans level: By ATC Trans alt: 6000′<br>Procedures based on 240 KT. |
|---|---|

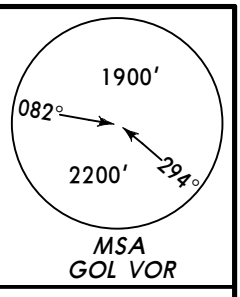


# LOVIK TWO ALFA (LOVIK 2A) *[LOVI2A]*
# LOVIK TWO KILO (LOVIK 2K) *[LOVI2K]*
# MABIR TWO ALFA (MABIR 2A) *[MABI2A]*
# MAMIN TWO ALFA (MAMIN 2A) *[MAMI2A]*
## RWY 10 DEPARTURES
VOR DME REQUIRED

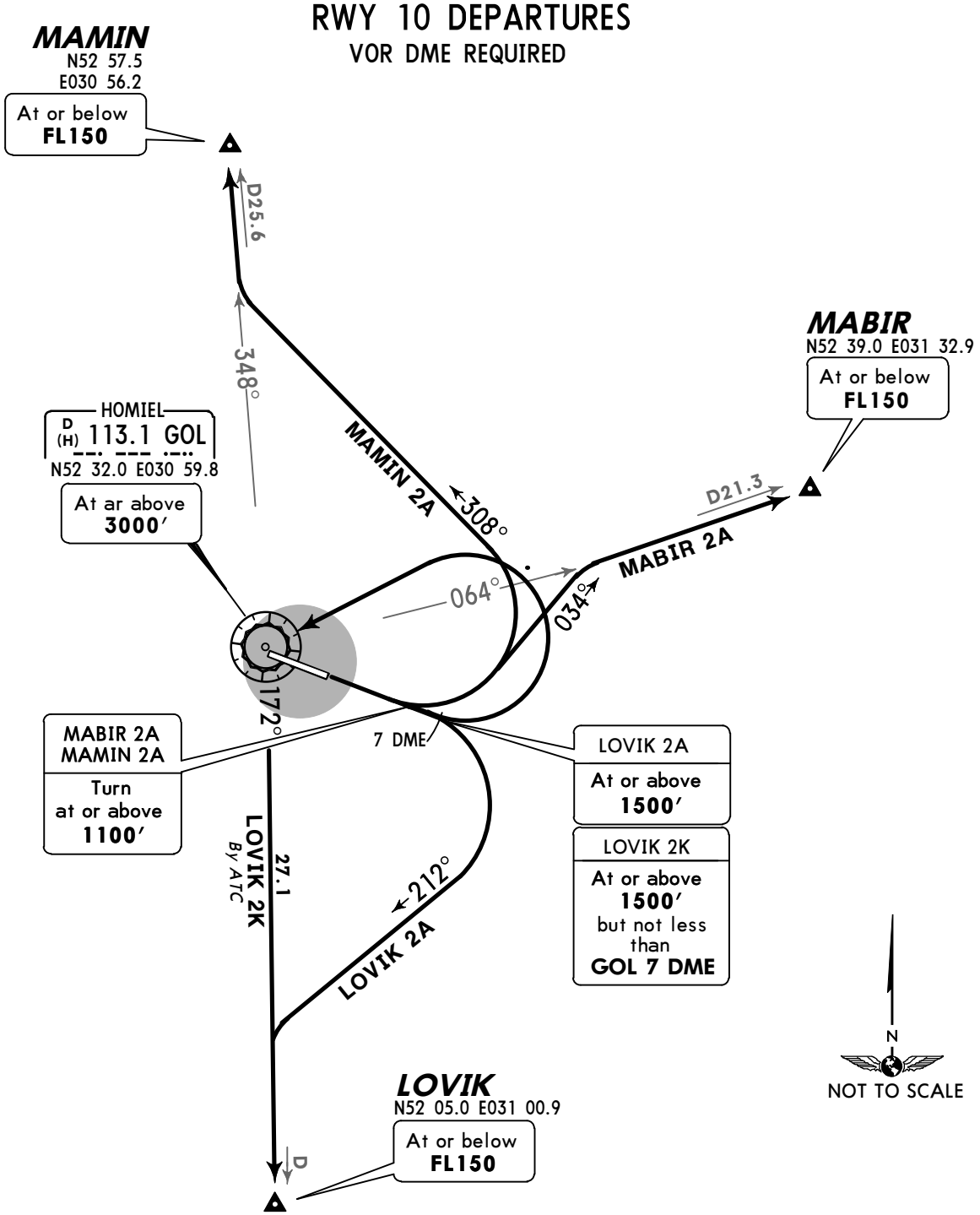


| SID | ROUTING |
|---|---|
| **LOVIK 2A** | Climb straight ahead to at or above 1500′, turn RIGHT, 212° track, intercept GOL R-172 to LOVIK. |
| **LOVIK 2K** By ATC | Climb straight ahead to at or above 1500′, not less than GOL 7 DME turn LEFT to GOL, GOL R-172 to LOVIK. |
| **MABIR 2A** | Climb straight ahead to at or above 1100′, turn LEFT, 034° track, intercept GOL R-064 to MABIR. |
| **MAMIN 2A** | Climb straight ahead to at or above 1100′, turn LEFT, 308° track, intercept GOL R-348 to MAMIN. |

*CHANGES:* MSA; SIDs renumbered & revised; GOL VORDME relocated.

© JEPPESEN, 2013. ALL RIGHTS RESERVED.

| Apt Elev 471′ | Trans level: By ATC Trans alt: 6000′<br>Procedures based on 240 KT. |
|---|---|

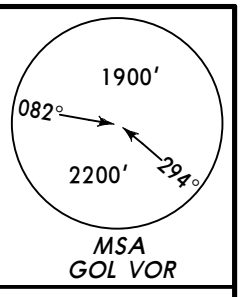


# LOVIK TWO BRAVO (LOVIK 2B) *[LOVI2B]*
# LOVIK TWO LIMA (LOVIK 2L) *[LOVI2L]*
# MABIR TWO BRAVO (MABIR 2B) *[MABI2B]*
# MAMIN TWO BRAVO (MAMIN 2B) *[MAMI2B]*

## RWY 28 DEPARTURES

VOR DME REQUIRED

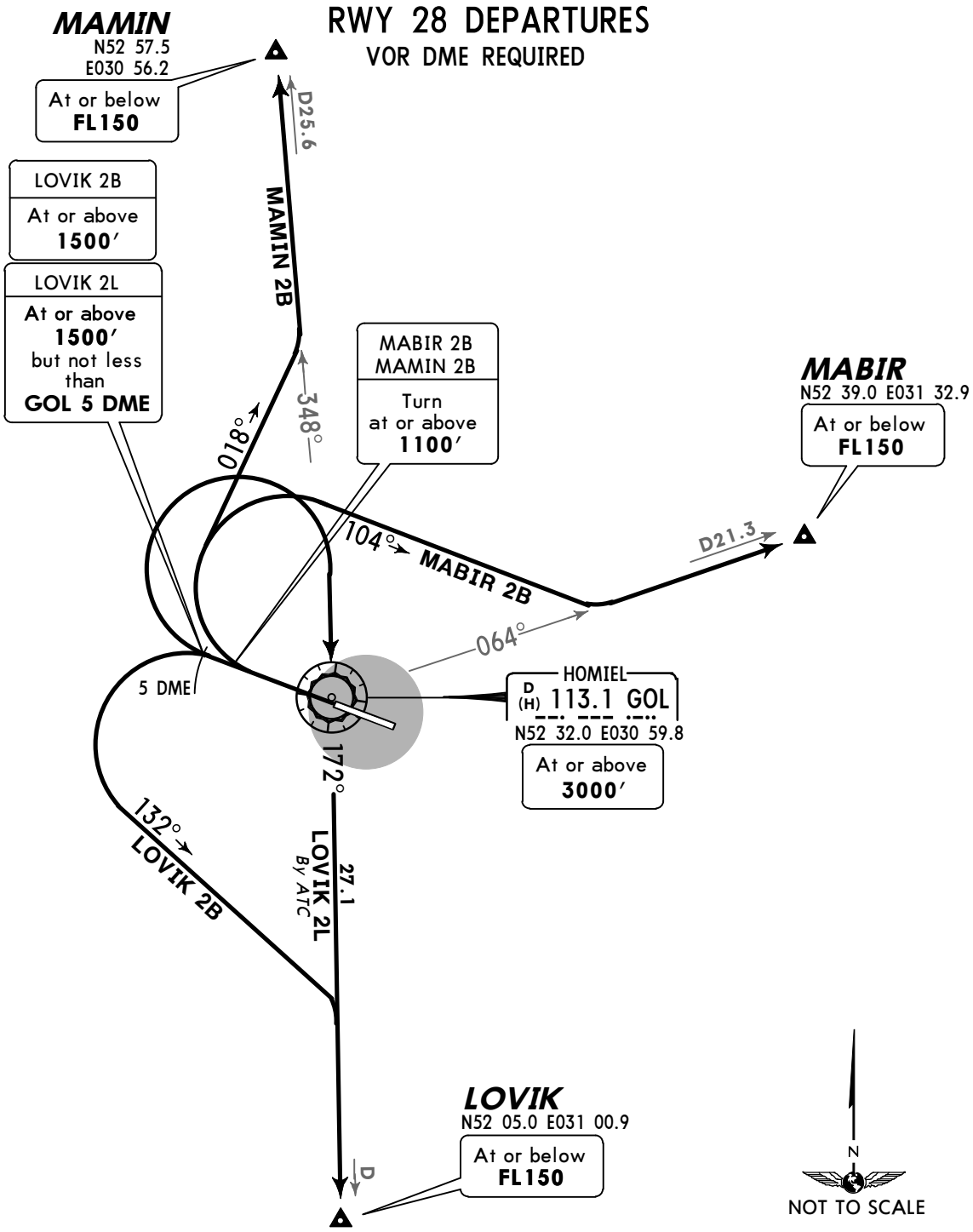


| SID | ROUTING |
|---|---|
| **LOVIK 2B** | Climb straight ahead to at or above 1500′, turn LEFT, 132° track, intercept GOL R-172 to LOVIK. |
| **LOVIK 2L** By ATC | Climb straight ahead to at or above 1500′, not less than GOL 5 DME, turn RIGHT to GOL, GOL R-172 to LOVIK. |
| **MABIR 2B** | Climb straight ahead to at or above 1100′, turn RIGHT, 104° track, intercept GOL R-064 to MABIR. |
| **MAMIN 2B** | Climb straight ahead to at or above 1100′, turn RIGHT, 018° track, intercept GOL R-348 to MAMIN. |

*CHANGES:* MSA; SIDs renumbered & revised; GOL VORDME relocated.

© JEPPESEN, 2013. ALL RIGHTS RESERVED.

| Apt Elev 471′ | Trans level: By ATC Trans alt: 6000′<br>Procedures based on 240 KT. |
|---|---|

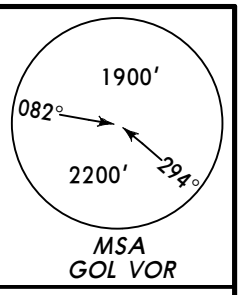


# GOGER TWO ALFA (GOGER 2A) *[GOGE2A]*
# GORUL TWO ALFA (GORUL 2A) *[GORU2A]*
# GORUL TWO KILO (GORUL 2K) *[GORU2K]*
# ROMAL TWO ALFA (ROMAL 2A) *[ROMA2A]*
## RWY 10 DEPARTURES
VOR DME REQUIRED

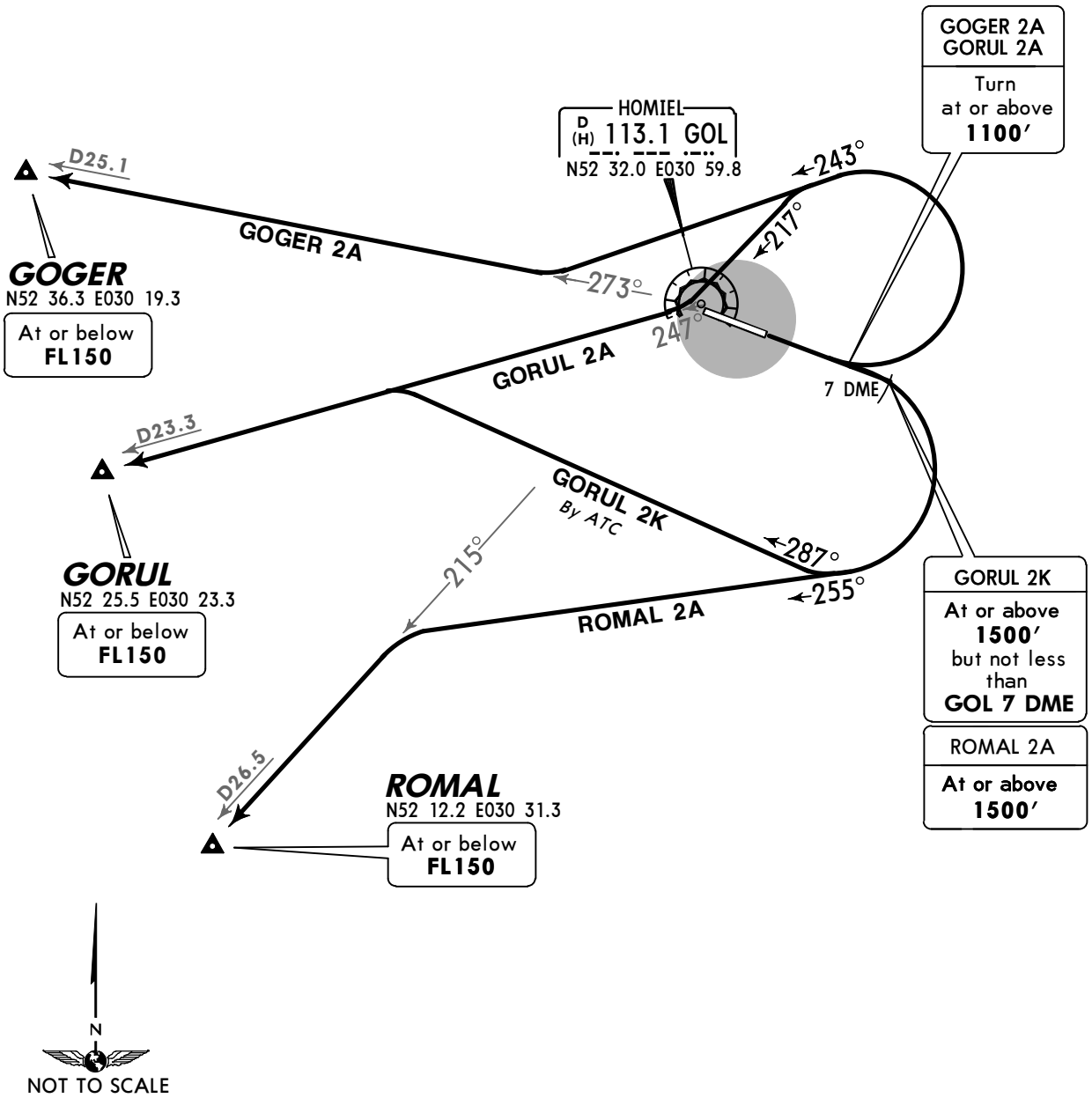


| SID | ROUTING |
|---|---|
| **GOGER 2A** | Climb straight ahead to at or above 1100′, turn LEFT, 243° track, intercept GOL R-273 to GOGER. |
| **GORUL 2A** | Climb straight ahead to at or above 1100′, turn LEFT, 217° track, intercept GOL R-247 to GORUL. |
| **GORUL 2K** By ATC | Climb straight ahead to at or above 1500′, not less than GOL 7 DME turn RIGHT, 287° track, intercept GOL R-247 to GORUL. |
| **ROMAL 2A** | Climb straight ahead to at or above 1500′, turn RIGHT, 255° track, intercept GOL R-215 to ROMAL. |

*CHANGES:* MSA; SIDs renumbered & revised; GOL VORDME relocated.

© JEPPESEN, 2013. ALL RIGHTS RESERVED.

| Apt Elev 471′ | Trans level: By ATC Trans alt: 6000′<br>Procedures based on 240 KT. |
|---|---|

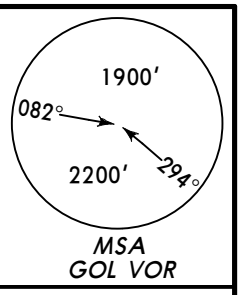


# GOGER TWO BRAVO (GOGER 2B) *[GOGE2B]*
# GORUL TWO BRAVO (GORUL 2B) *[GORU2B]*
# ROMAL TWO BRAVO (ROMAL 2B) *[ROMA2B]*
## RWY 28 DEPARTURES
VOR DME REQUIRED

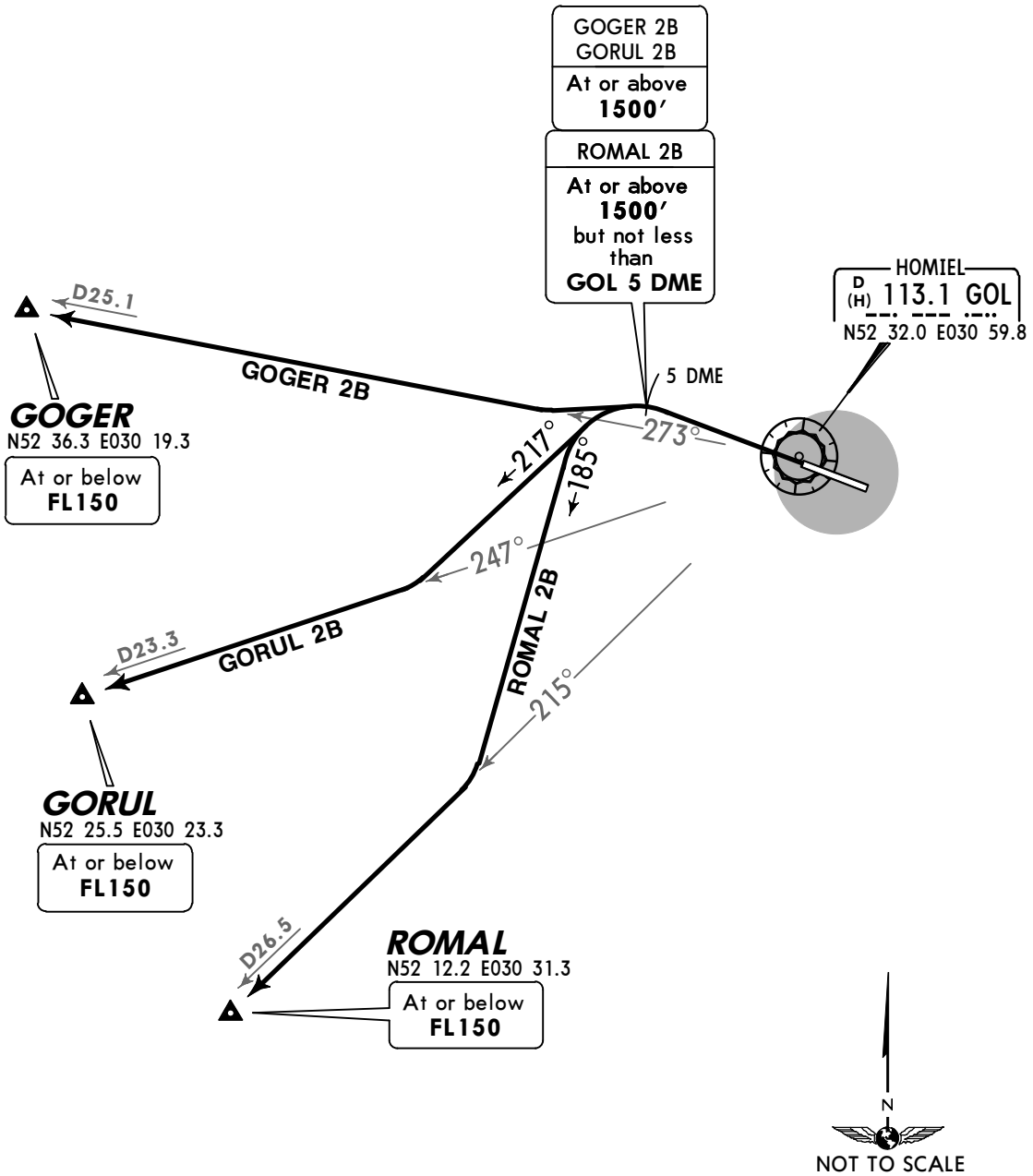


| SID | ROUTING |
|---|---|
| **GOGER 2B** | Climb straight ahead to at or above 1500′, turn LEFT, intercept GOL R-273 to GOGER. |
| **GORUL 2B** | Climb straight ahead to at or above 1500′, turn LEFT, 217° track, intercept GOL R-247 to GORUL. |
| **ROMAL 2B** | Climb straight ahead to at or above 1500′, not less than GOL 5 DME turn LEFT, 185° track, intercept GOL R-215 to ROMAL. |

*CHANGES:* MSA; SIDs renumbered & revised; GOL VORDME relocated.

© JEPPESEN, 2013. ALL RIGHTS RESERVED.

NOISE ABATEMENT

## ARRIVALS

Noise abatement procedures during approach phase shall be carried out by crews of all ACFT according to the Aeroplane Flight Manual unless there are unfavourable meteorological conditions, such as considerable wind speed, cumulo-nimbus clouds etc., in arrival and approach sectors. During instrument as well as visual approach, flying below the ILS glide path angle is not allowed.
No noise abatement procedures shall prescribe the exceeding of indicated air speed of descent.

## DEPARTURES

Noise abatement procedures during take-off and climbing phase shall be carried out by crews of all ACFT according to the Aeroplane Flight Manual, but not at the expense of flight safety in case of engines failure during take-off phase or in case of forecasted or expected wind shear or downward gusts.


© JEPPESEN, 2013. ALL RIGHTS RESERVED.

| ATIS | HOMIEL Tower (GND/TWR) |
|---|---|
| 119.55 (Russian 124.47) | 118.1 |

Taxiing and towing without permission of controller are prohibited.
Northern rwy shoulder can be used for emergency landing.
Birds.

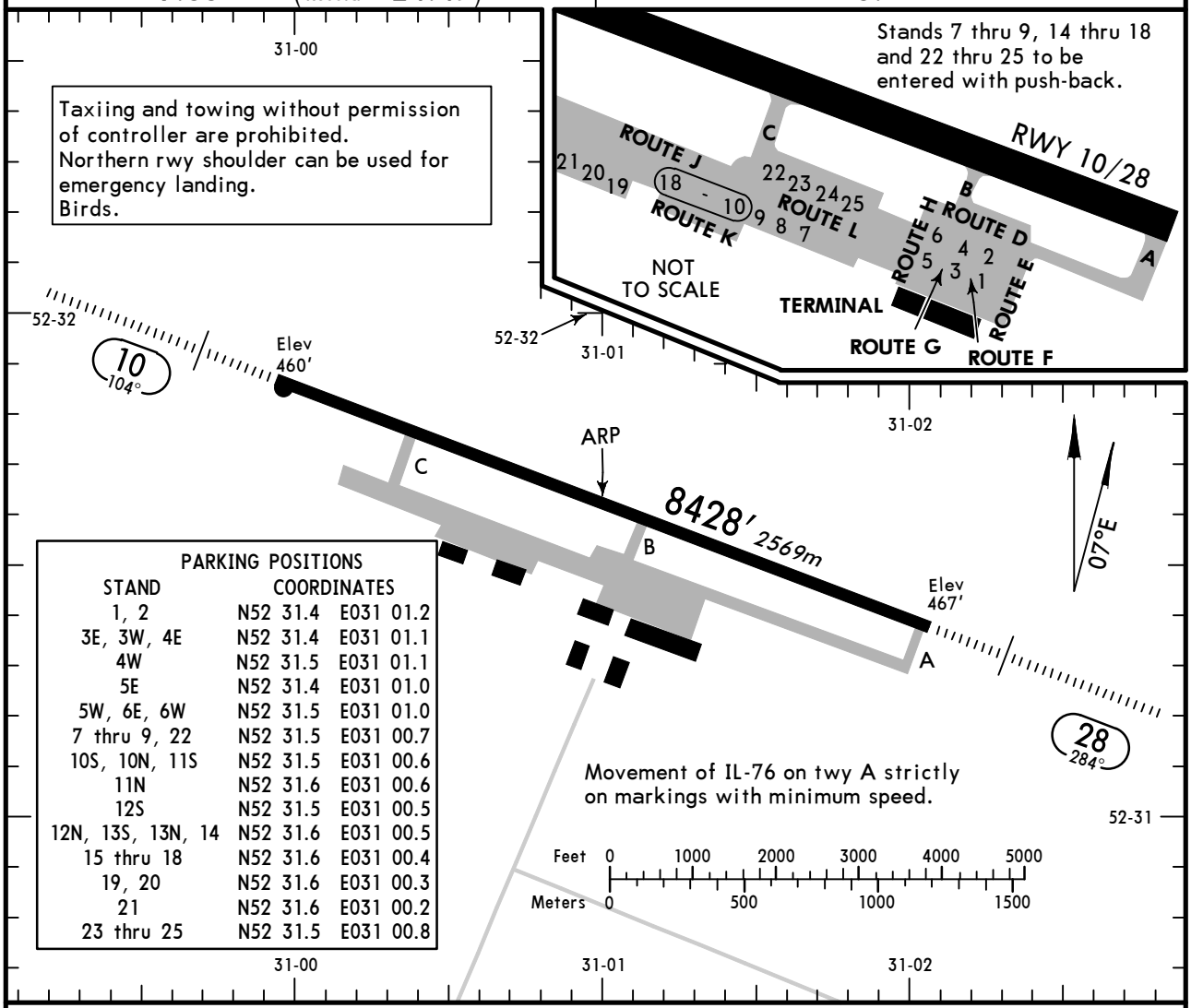


PARKING POSITIONS

| STAND | COORDINATES |
|---|---|
| 1, 2 | N52 31.4 E031 01.2 |
| 3E, 3W, 4E | N52 31.4 E031 01.1 |
| 4W | N52 31.5 E031 01.1 |
| 5E | N52 31.4 E031 01.0 |
| 5W, 6E, 6W | N52 31.5 E031 01.0 |
| 7 thru 9, 22 | N52 31.5 E031 00.7 |
| 10S, 10N, 11S | N52 31.5 E031 00.6 |
| 11N | N52 31.6 E031 00.6 |
| 12S | N52 31.5 E031 00.5 |
| 12N, 13S, 13N, 14 | N52 31.6 E031 00.5 |
| 15 thru 18 | N52 31.6 E031 00.4 |
| 19, 20 | N52 31.6 E031 00.3 |
| 21 | N52 31.6 E031 00.2 |
| 23 thru 25 | N52 31.5 E031 00.8 |

ADDITIONAL RUNWAY INFORMATION

| RWY | | USABLE LENGTHS LANDING BEYOND Threshold | Glide Slope | TAKE-OFF | WIDTH |
|---|---|---|---|---|---|
| 10<br>28 | HIRL *(60m)* HIALS PAPI-L (angle 2.67°) RVR | | 7334′ *2235m*<br>7456′ *2273m* | | 141′<br>*43m* |
| | | | | | |
| | | | | | |
| | | | | | |
| | | | | | |

TAKE-OFF

AIR CARRIER (JAA)

**All Rwys**

| | **LVP must be in force** RCLM (DAY only) or RL | RCLM (DAY only) or RL |
|---|---|---|
| A | *250m* | *400m* |
| B | | |
| C | | |
| D | *300m* | |

*CHANGES:* THR elevations. Obstacles. Parking positions.

© JEPPESEN 1999, 2013. ALL RIGHTS RESERVED.

| STRAIGHT-IN RWY | | A | B | C | D |
|---|---|---|---|---|---|
| 10 | ILS | **660**′(200′) | **660**′(200′) | **660**′(200′) | **661**′(201′) |
| | *FULL* | **R550m** | **R550m** | **R550m** | **R550m** |
| | *Limited* | R750m | R750m | R750m | R750m |
| | *ALS out* | R1200m | R1200m | R1200m | R1200m |
| | LOC | NOT AUTH | NOT AUTH | NOT AUTH | NOT AUTH |
| | VOR ❶ | **820**′(360′) | **820**′(360′) | **820**′(360′) | **820**′(360′) |
| | | **R900m** | **R900m** | **R900m** | **R900m** |
| | *ALS out* | R1500m | R1500m | R1600m | R1600m |
| | NDB ❶ | **820**′(360′) | **820**′(360′) | **820**′(360′) | **820**′(360′) |
| | | **R900m** | **R900m** | **R900m** | **R900m** |
| | *ALS out* | R1500m | R1500m | R1600m | R1600m |
| 28 | ILS | **667**′(200′) | **667**′(200′) | **667**′(200′) | **667**′(200′) |
| | *FULL* | **R550m** | **R550m** | **R550m** | **R550m** |
| | *Limited* | R750m | R750m | R750m | R750m |
| | *ALS out* | R1200m | R1200m | R1200m | R1200m |
| | LOC | NOT AUTH | NOT AUTH | NOT AUTH | NOT AUTH |
| | VOR ❶ | **780**′(313′) | **780**′(313′) | **780**′(313′) | **780**′(313′) |
| | | **R750m** | **R750m** | **R750m** | **R750m** |
| | *ALS out* | R1400m | R1400m | R1400m | R1400m |
| | NDB ❶ | **780**′(313′) | **780**′(313′) | **780**′(313′) | **780**′(313′) |
| | | **R750m** | **R750m** | **R750m** | **R750m** |
| | *ALS out* | R1400m | R1400m | R1400m | R1400m |

❶Continuous Descent Final Approach.

| CIRCLE-TO-LAND ❷ | 100 KT | 135 KT | 180 KT | 205 KT |
|---|---|---|---|---|
| | **910**′(439′) | **970**′(499′) | **1120**′(649′) | **1180**′(709′) |
| | V1500m | V1600m | V2400m | V3600m |

❷Not authorized clockwise between R-114 GOL and R-276 GOL

**TAKE-OFF RWY 10, 28**

| | LVP must be in Force<br>RCLM (DAY only) or RL | RCLM (DAY only) or RL | NIL (DAY only) |
|---|---|---|---|
| A, B, C | 250m | 400m | 500m |
| D | 300m | | |


© JEPPESEN, 2010, 2013. ALL RIGHTS RESERVED.

BRIEFING STRIP

| ATIS | HOMIEL Approach (R) | HOMIEL Tower | Ground |
|---|---|---|---|
| 119.55(Russian 124.47) | 126.1 | 118.1 | 118.1 |

| LOC IGM | Final Apch Crs | GS D5.4 GOL | ILS DA(H) | Apt Elev 471′ |
|---|---|---|---|---|
| *109.3 | 104° | 2100′(1640′) | Refer to Minimums | RWY 460′ |

**MISSED APCH:** Climb on 104° to 1100′ or above, then turn LEFT to POBIM climbing to 2000′ and follow ATC instructions.

Alt Set: hPa  Rwy Elev: 17 hPa  Trans level: By ATC  Trans alt: 6000′

**VOR DME required.**

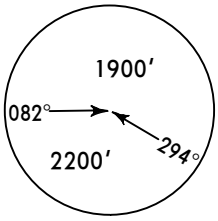


MSA
GOL VOR

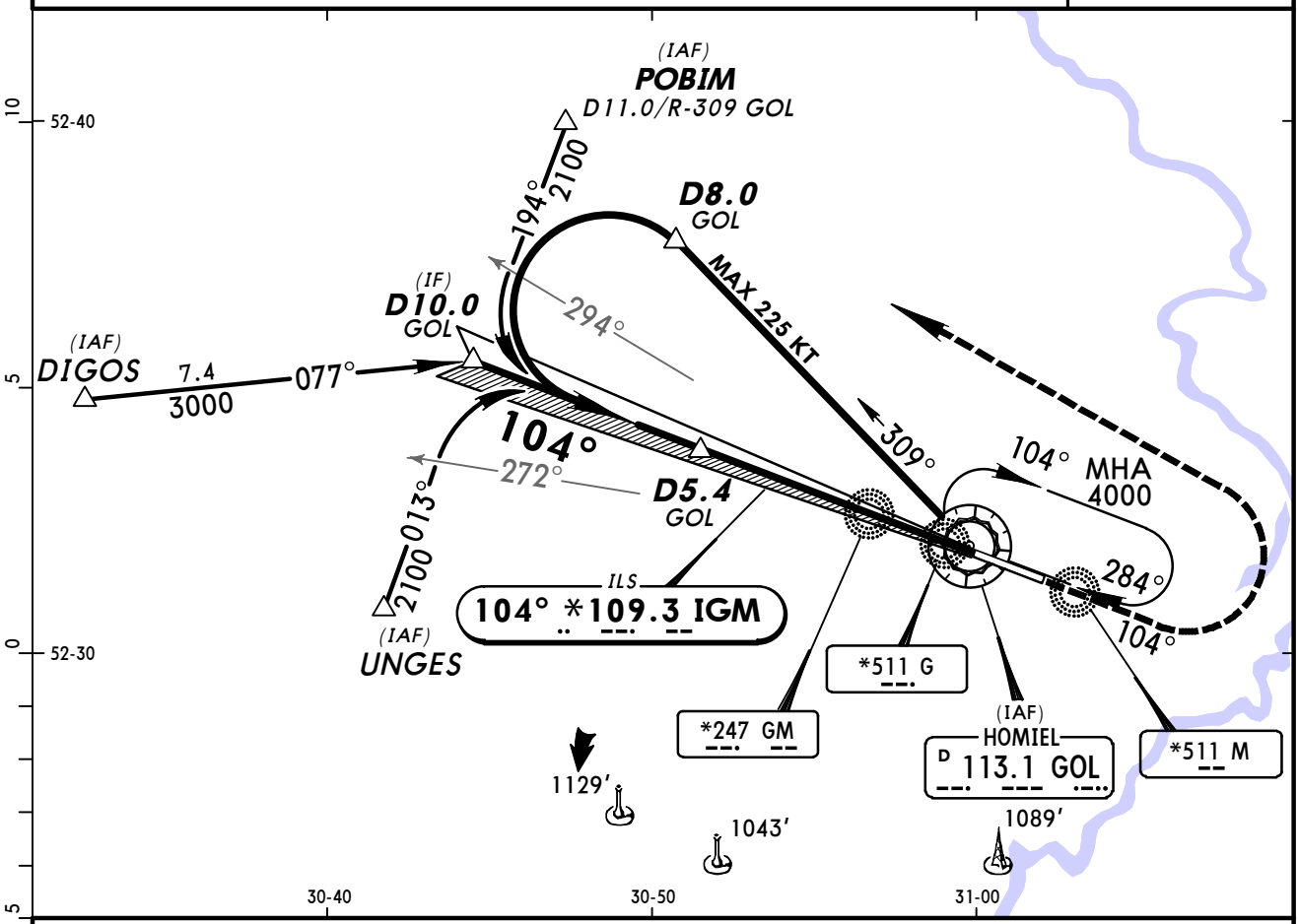


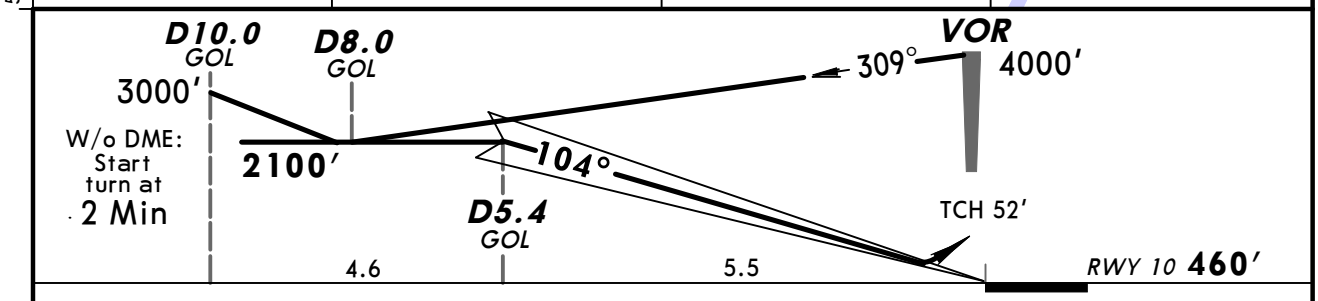


| Gnd speed-Kts | 70 | 90 | 100 | 120 | 140 | 160 |
|---|---|---|---|---|---|---|
| GS 2.70° | 334 | 430 | 478 | 573 | 669 | 764 |

HIALS
PAPI

1100′ or above on 104°

LT

POBIM

PANS OPS

| | STRAIGHT-IN LANDING RWY 10 ILS DA(H) ABC: 660′(200′) D: 661′(201′) FULL | ALS out | LOC (GS out) |
|---|---|---|---|
| A | RVR 720m VIS 800m | 1200m | NOT AUTHORIZED |
| B | | | |
| C | | | |
| D | | | |

CIRCLE-TO-LAND
Not authorized clockwise btn R-114 GOL and R-262 GOL

| Max Kts | MDA(H) | |
|---|---|---|
| 100 | 910′ (439′) | 1600m |
| 135 | 970′ (499′) | 1600m |
| 180 | 1120′ (649′) | 2400m |
| 205 | 1170′ (699′) | 3600m |

*CHANGES:* MSA. Procedure. Circling restriction.

© JEPPESEN 1999, 2013. ALL RIGHTS RESERVED.

BRIEFING STRIP

| ATIS | HOMIEL Approach (R) | HOMIEL Tower | Ground |
|---|---|---|---|
| 119.55 (Russian 124.47) | 126.1 | 118.1 | 118.1 |

| LOC IMV | Final Apch Crs | GS D7.0 GOL | ILS DA(H) | Apt Elev 471′ |
|---|---|---|---|---|
| *108.7 | 284° | 2100′ (1633′) | 667′ (200′) | RWY 467′ |

**MISSED APCH:** Climb on 284° to 1100′ or above, then turn RIGHT to INDAB climbing to 2000′ and follow ATC instructions.

Alt Set: hPa  Rwy Elev: 17 hPa  Trans level: By ATC  Trans alt: 6000′

**VOR DME required.**

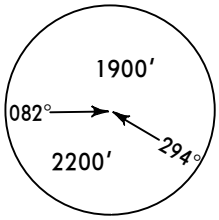


MSA
GOL VOR

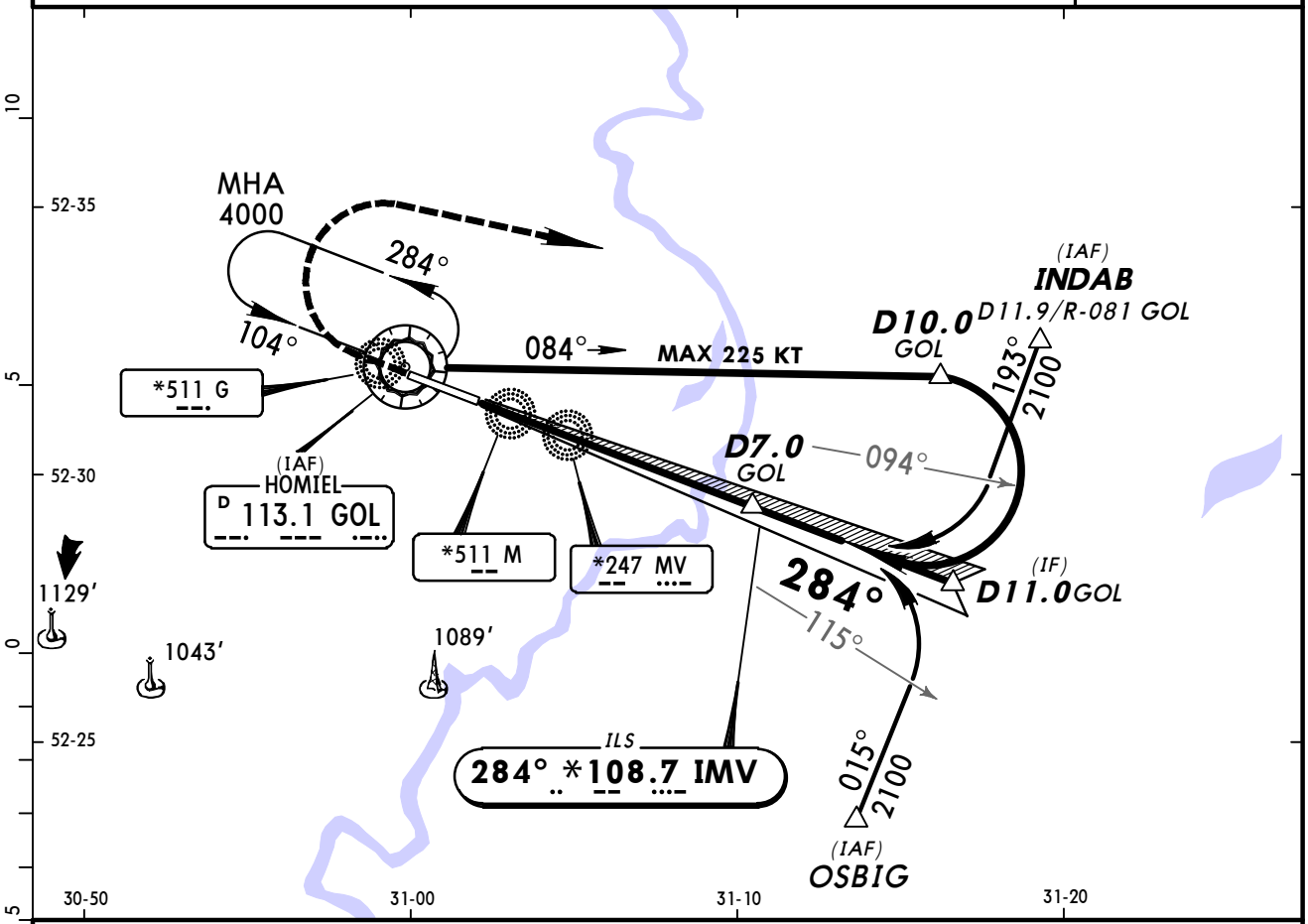


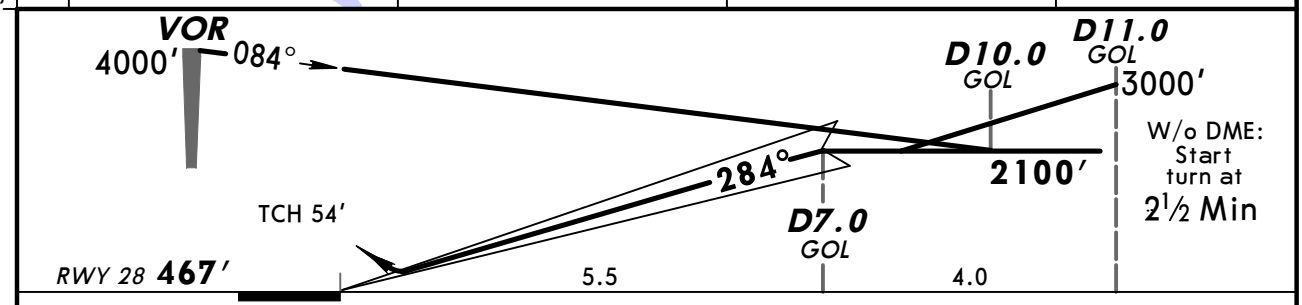


| Gnd speed-Kts | 70 | 90 | 100 | 120 | 140 | 160 |
|---|---|---|---|---|---|---|
| GS 2.70° | 334 | 430 | 478 | 573 | 669 | 764 |

HIALS
PAPI

1100′ or above on 284°  RT  INDAB

PANS OPS

| | STRAIGHT-IN LANDING RWY 28 ILS DA(H) 667′ (200′) FULL | ALS out | LOC (GS out) |
|---|---|---|---|
| A | RVR 720m VIS 800m | 1200m | NOT AUTHORIZED |
| B | | | |
| C | | | |
| D | | | |

CIRCLE-TO-LAND
Not authorized clockwise btn R-114 GOL and R-262 GOL

| Max Kts | MDA(H) | |
|---|---|---|
| 100 | 910′ (439′) | 1600m |
| 135 | 970′ (499′) | 1600m |
| 180 | 1120′ (649′) | 2400m |
| 205 | 1170′ (699′) | 3600m |

*CHANGES:* MSA. Procedure. Circling restriction.

© JEPPESEN 1999, 2013. ALL RIGHTS RESERVED.

BRIEFING STRIP

| ATIS | HOMIEL Approach (R) | HOMIEL Tower | Ground |
|---|---|---|---|
| 119.55 (Russian 124.47) | 126.1 | 118.1 | 118.1 |

| VOR | Final Apch Crs | Minimum Alt | MDA(H) | Apt Elev 471′ |
|---|---|---|---|---|
| GOL 113.1 | 100° | D5.0 2100′ (1640′) | 820′ (360′) | RWY 460′ |

**MISSED APCH:** Climb on 100° to 1100′ or above, then turn LEFT to POBIM climbing to 2000′ and follow ATC instructions.

Alt Set: hPa  Rwy Elev: 17 hPa  Trans level: By ATC  Trans alt: 6000′

**VOR DME required.**

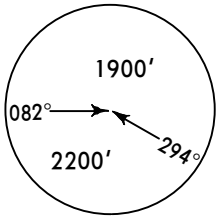


MSA
GOL VOR

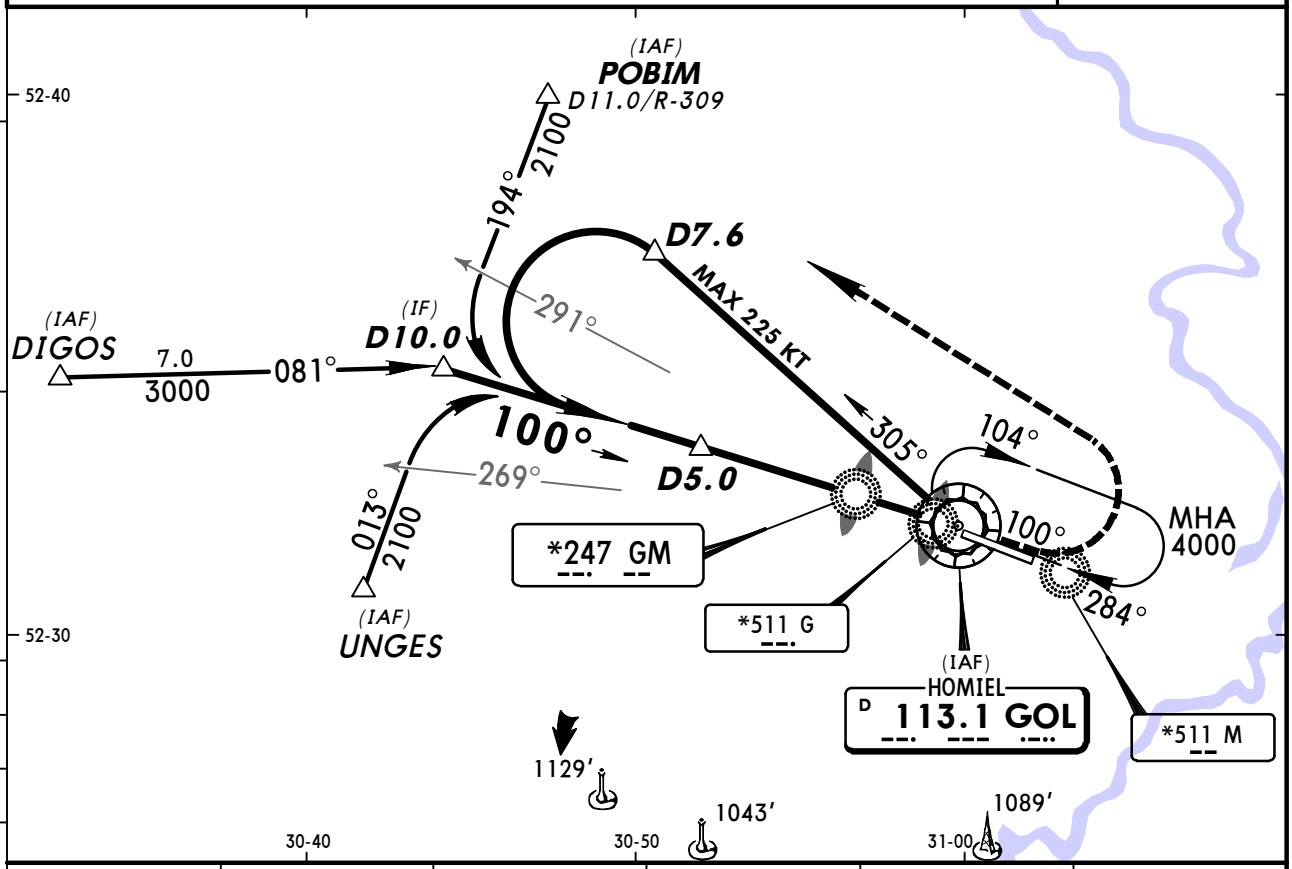


| GOL DME | 5.0 | 4.0 | 3.0 | 2.0 | 1.0 |
|---|---|---|---|---|---|
| ALTITUDE | 2100′ | 1810′ | 1490′ | 1180′ | 860′ |

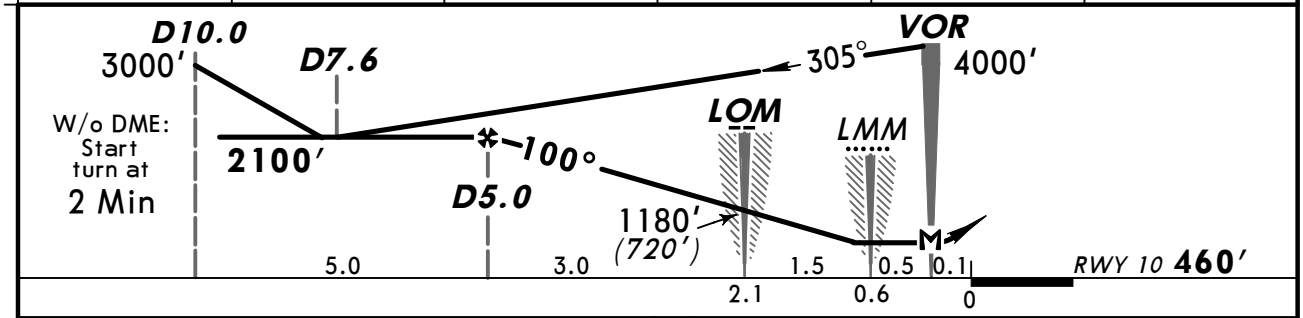


| Gnd speed-Kts | 70 | 90 | 100 | 120 | 140 | 160 |
|---|---|---|---|---|---|---|
| Descent Angle 3.00° | 372 | 478 | 531 | 637 | 743 | 849 |
| MAP at VOR | | | | | | |

HIALS
PAPI

1100′ or above on 100°

LT

POBIM

PANS OPS

STRAIGHT-IN LANDING RWY 10

MDA(H) 820′ (360′)

| | | ALS out |
|---|---|---|
| A | RVR 720m VIS 800m | RVR 1500m VIS 1600m |
| B | | |
| C | | |
| D | RVR 1500m VIS 1600m | RVR 1800m VIS 2000m |

CIRCLE-TO-LAND

Not authorized clockwise between R-114 GOL and R-262 GOL

| Max Kts | MDA(H) | |
|---|---|---|
| 100 | 910′ (439′) | 1600m |
| 135 | 970′ (499′) | 1600m |
| 180 | 1120′ (649′) | 2400m |
| 205 | 1170′ (699′) | 3600m |

*CHANGES:* MSA. Procedure. Circling restriction.

© JEPPESEN 2013. ALL RIGHTS RESERVED.

BRIEFING STRIP

| ATIS | HOMIEL Approach (R) | HOMIEL Tower | Ground |
|---|---|---|---|
| 119.55 (Russian 124.47) | 126.1 | 118.1 | 118.1 |

| VOR | Final Apch Crs | Minimum Alt | MDA(H) | Apt Elev 471′ |
|---|---|---|---|---|
| GOL 113.1 | 286° | D6.5 2100′(1633′) | 780′ (313′) | RWY 467′ |

**MISSED APCH:** Climb on 286° to 1100′ or above, then turn RIGHT to INDAB climbing to 2000′ and follow ATC instructions.

Alt Set: hPa  Rwy Elev: 17 hPa  Trans level: By ATC  Trans alt: 6000′

**VOR DME required.**

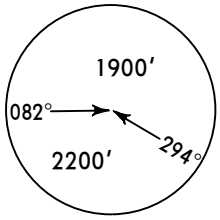


MSA
GOL VOR

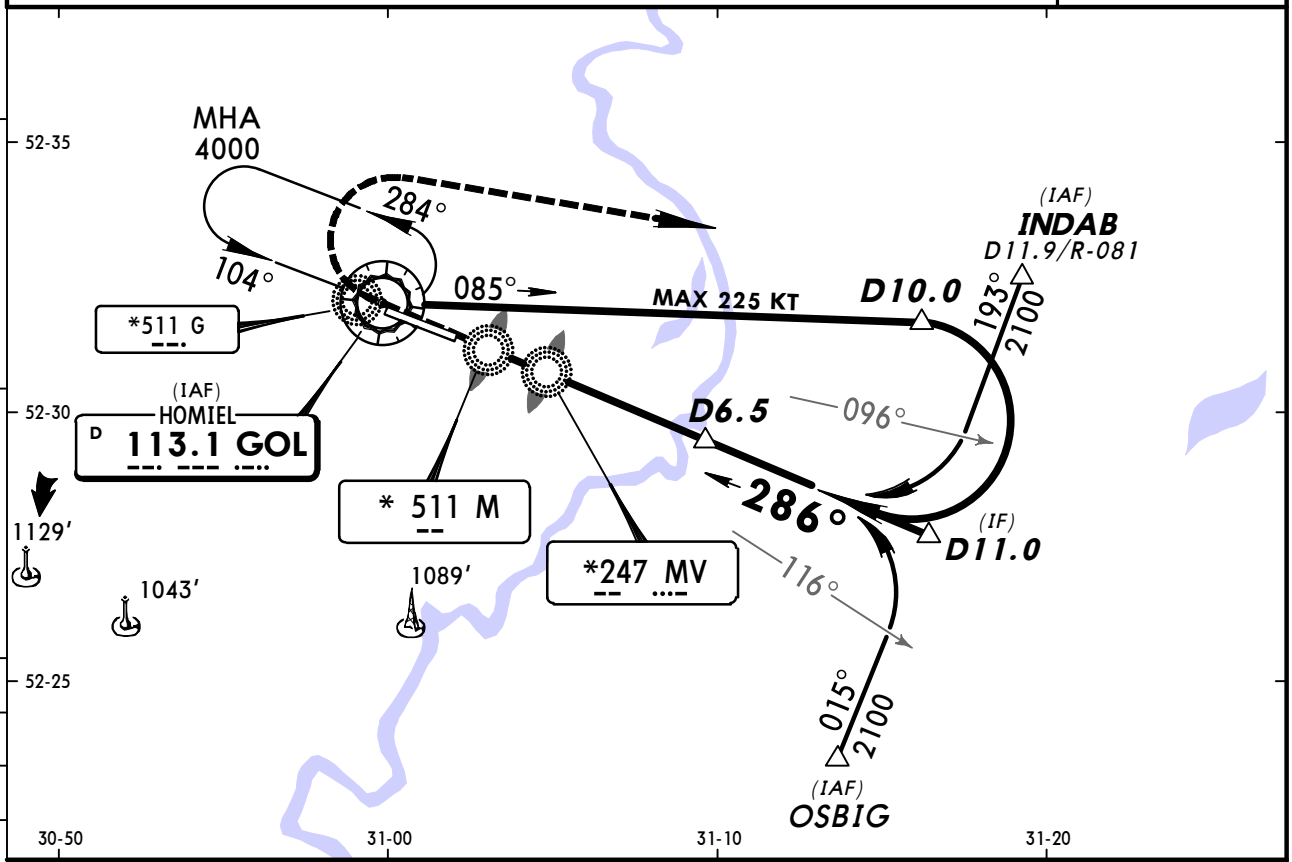


| GOL DME | 2.0 | 3.0 | 4.0 | 5.0 | 6.0 |
|---|---|---|---|---|---|
| ALTITUDE | 680′ | 990′ | 1310′ | 1620′ | 1940′ |

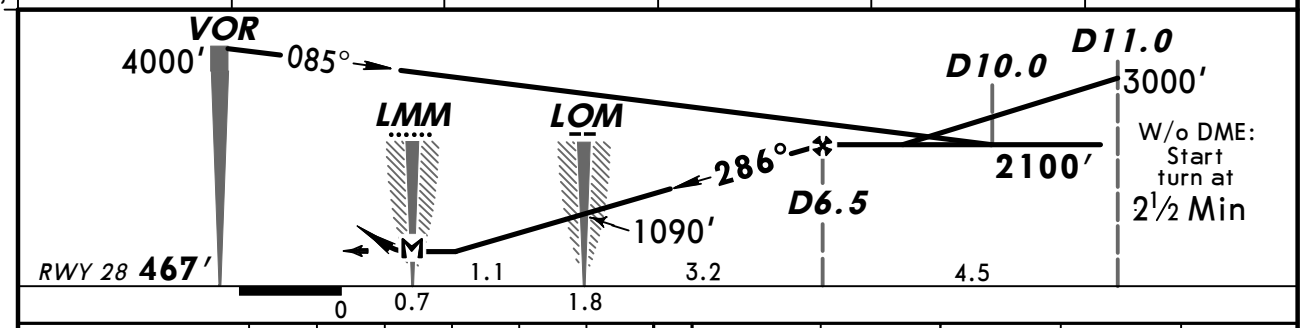


| Gnd speed-Kts | 70 | 90 | 100 | 120 | 140 | 160 |
|---|---|---|---|---|---|---|
| Descent Angle 3.00° | 372 | 478 | 531 | 637 | 743 | 849 |
| MAP at LMM | | | | | | |

HIALS
PAPI

1100′ or above on 286°

RT

INDAB

PANS OPS

STRAIGHT-IN LANDING RWY 28

MDA(H) 780′(313′)

| | FULL | ALS out |
|---|---|---|
| A | RVR 720m VIS 800m | RVR 1500m VIS 1600m |
| B | | |
| C | | |
| D | RVR 1500m VIS 1600m | |

CIRCLE-TO-LAND
Not authorized clockwise between R-114 GOL and R-262 GOL

| Max Kts | MDA(H) | |
|---|---|---|
| 100 | 910′ (439′) | 1600m |
| 135 | 970′ (499′) | 1600m |
| 180 | 1120′ (649′) | 2400m |
| 205 | 1170′ (699′) | 3600m |

*CHANGES:* NDB proc transferred to 16-2. MSA. Procedure. Circling restriction.

© JEPPESEN 1999, 2013. ALL RIGHTS RESERVED.

BRIEFING STRIP

| ATIS | HOMIEL Approach (R) | HOMIEL Tower | Ground |
|---|---|---|---|
| 119.55 (Russian 124.47) | 126.1 | 118.1 | 118.1 |

| NDB | Final Apch Crs | Minimum Alt | MDA(H) | Apt Elev 471′ |
|---|---|---|---|---|
| G *511 | 104° | D5.0 2100′ (1640′) | 820′ (360′) | RWY 460′ |

**MISSED APCH:** Climb on 104° to 1100′ or above, then turn LEFT to POBIM climbing to 2000′ and follow ATC instructions.

Alt Set: hPa  Rwy Elev: 17 hPa  Trans level: By ATC  Trans alt: 6000′

**VOR DME and NDB required.**

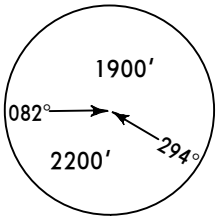


MSA
GOL VOR

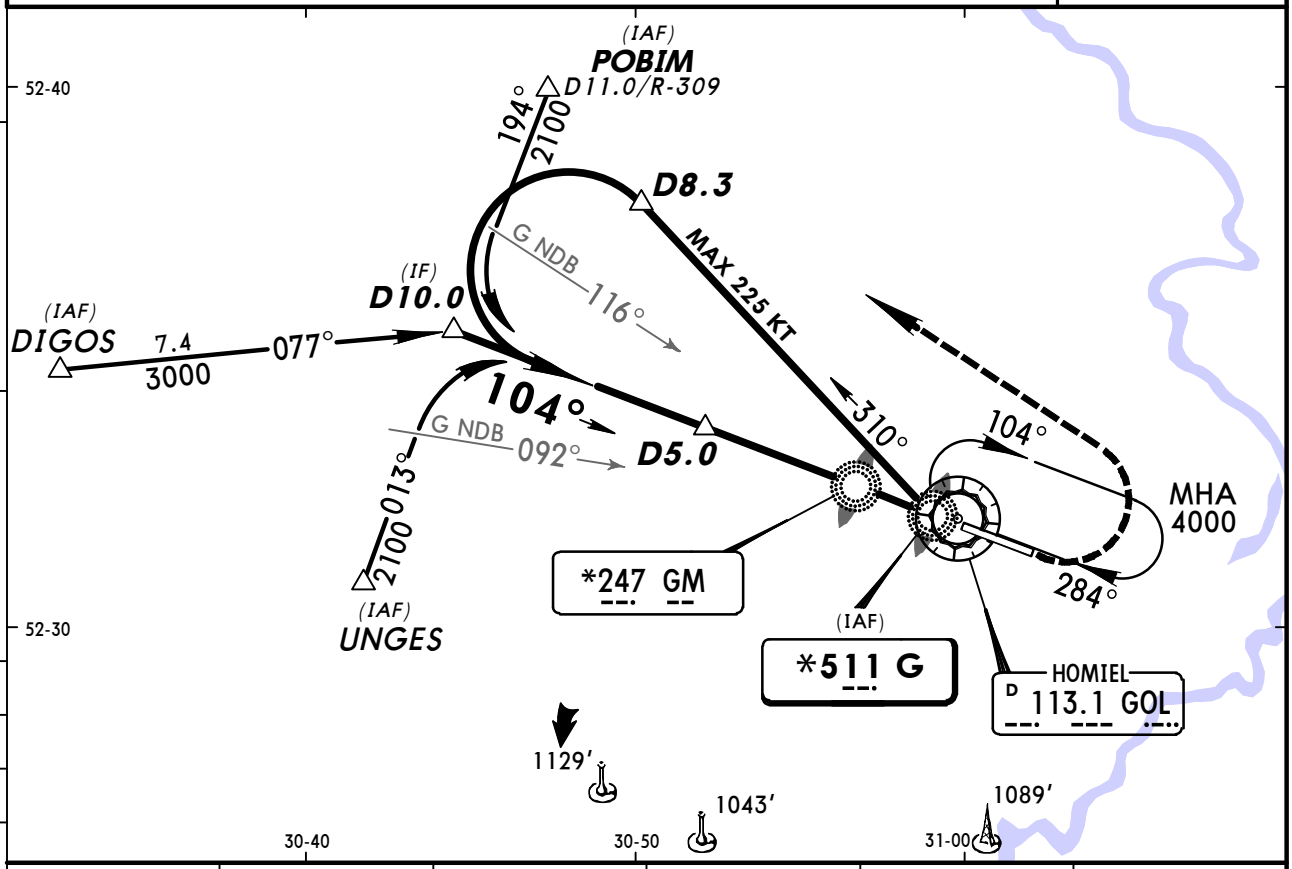


| GOL DME | 5.0 | 4.0 | 3.0 | 2.0 | 1.0 |
|---|---|---|---|---|---|
| ALTITUDE | 2100′ | 1810′ | 1490′ | 1180′ | 860′ |

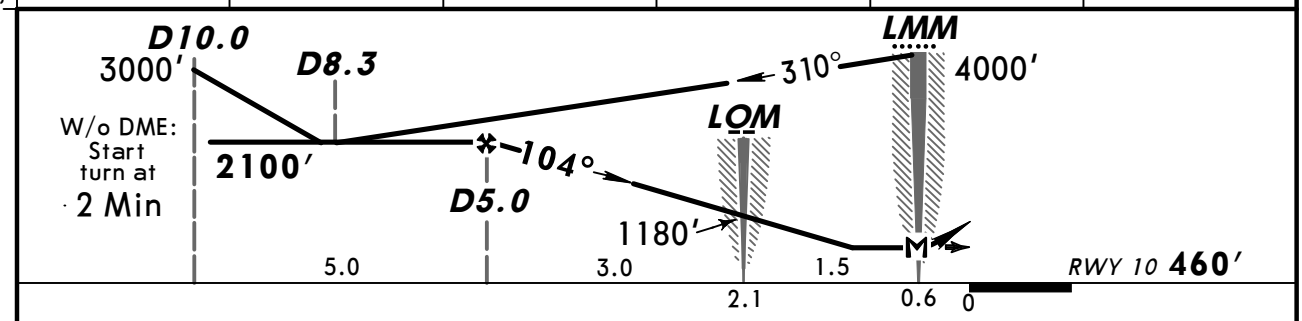


| Gnd speed-Kts | 70 | 90 | 100 | 120 | 140 | 160 |
|---|---|---|---|---|---|---|
| Descent Angle 3.00° | 372 | 478 | 531 | 637 | 743 | 849 |
| MAP at LMM | | | | | | |

HIALS
PAPI

1100′ or above on 104°

LT

POBIM

PANS OPS

STRAIGHT-IN LANDING RWY 10

MDA(H) 820′ (360′)

| | | ALS out |
|---|---|---|
| A | RVR 1200m | RVR 1500m VIS 1600m |
| B | | |
| C | | |
| D | RVR 1500m VIS 1600m | RVR 1800m VIS 2000m |

CIRCLE-TO-LAND

Not authorized clockwise between R-114 GOL and R-262 GOL

| Max Kts | MDA(H) | |
|---|---|---|
| 100 | 910′ (439′) | 1600m |
| 135 | 970′ (499′) | 1600m |
| 180 | 1120′ (649′) | 2400m |
| 205 | 1170′ (699′) | 3600m |

*CHANGES:* MSA. Procedure. Circling restriction.

© JEPPESEN 2001, 2013. ALL RIGHTS RESERVED.

BRIEFING STRIP

| ATIS | HOMIEL Approach (R) | HOMIEL Tower | Ground |
|---|---|---|---|
| 119.55 (Russian 124.47) | 126.1 | 118.1 | 118.1 |

| NDB M | Final Apch Crs | Minimum Alt D6.5 | MDA(H) | Apt Elev 471′ |
|---|---|---|---|---|
| *511 | 284° | 2100′ (1633′) | 780′ (313′) | RWY 467′ |

**MISSED APCH:** Climb on 284° to 1100′ or above, then turn RIGHT to INDAB climbing to 2000′ and follow ATC instructions.

Alt Set: hPa  Rwy Elev: 17 hPa  Trans level: By ATC  Trans alt: 6000′

**VOR DME and NDB required.**

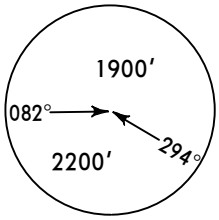


MSA
GOL VOR

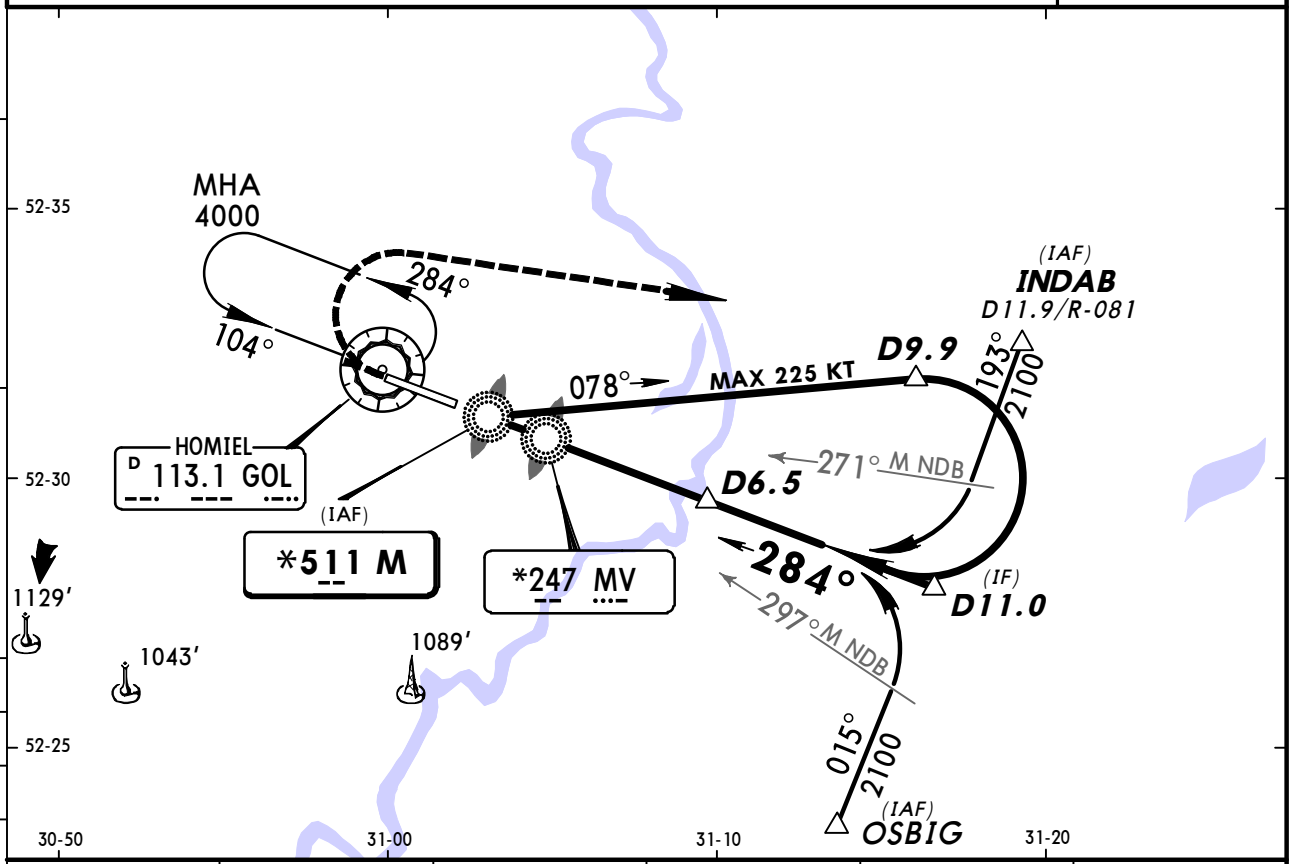


| GOL DME | 2.0 | 3.0 | 4.0 | 5.0 | 6.0 |
|---|---|---|---|---|---|
| ALTITUDE | 680′ | 990′ | 1310′ | 1620′ | 1940′ |

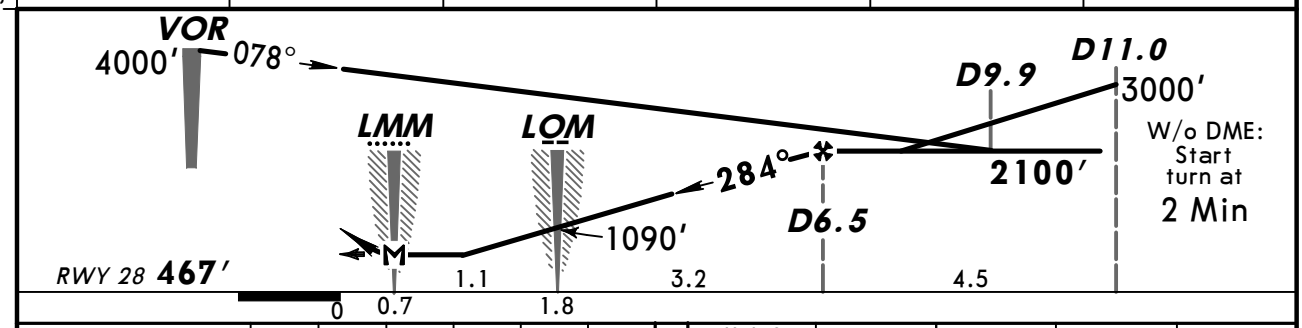


| Gnd speed-Kts | 70 | 90 | 100 | 120 | 140 | 160 |
|---|---|---|---|---|---|---|
| Descent Angle 3.00° | 372 | 478 | 531 | 637 | 743 | 849 |
| MAP at LMM | | | | | | |

HIALS
PAPI

1100′ or above on 284°

RT

INDAB

PANS OPS

STRAIGHT-IN LANDING RWY 28

MDA(H) 780′ (313′)

| | | ALS out |
|---|---|---|
| A | RVR 1200m | RVR 1500m VIS 1600m |
| B | | |
| C | | |
| D | RVR 1500m VIS 1600m | |

CIRCLE-TO-LAND

Not authorized clockwise between R-114 GOL and R-262 GOL

| Max Kts | MDA(H) | |
|---|---|---|
| 100 | 910′ (439′) | 1600m |
| 135 | 970′ (499′) | 1600m |
| 180 | 1120′ (649′) | 2400m |
| 205 | 1170′ (699′) | 3600m |

*CHANGES:* Procedure transferred from 13-2. MSA. Procedure. Circling restriction.

© JEPPESEN 1999, 2013. ALL RIGHTS RESERVED.

(c) JEPPESEN SANDERSON, INC., 2014, ALL RIGHTS RESERVED

JEPPESEN
JeppView for Windows

## Chart changes since cycle 26-2013

ADD = added chart, REV = revised chart, DEL = deleted chart.

| ACT | PROCEDURE IDENT | INDEX | REV DATE | EFF DATE |
|---|---|---|---|---|

**HOMIEL, (HOMIEL - UMGG)**

(c) JEPPESEN SANDERSON, INC., 2014, ALL RIGHTS RESERVED


# TERMINAL CHART CHANGE NOTICES

## No Chart Change Notices for Airport UMGG