(c) JEPPESEN SANDERSON, INC., 2014, ALL RIGHTS RESERVED

List of pages in this Trip Kit

Trip Kit Index
Airport Information For UKCC
Terminal Charts For UKCC
Revision Letter For Cycle 01-2014
Change Notices
Notebook

(c) JEPPESEN SANDERSON, INC., 2014, ALL RIGHTS RESERVED

General Information

Location: Donets'k Ukr
IATA Code: DOK
Lat/Long: N48° 04.5' E037° 43.5'
Elevation: 783 ft

Airport Use: Public
Magnetic Variation: 7.7°E

Fuel Types: Jet A-1
Repair Types: Minor Airframe, Minor Engine
Customs: Yes
Airport Type: IFR
Landing Fee: No
Control Tower: Yes
Jet Start Unit: Yes
LLWS Alert: No
Beacon: No

Sunrise: 0519 Z
Sunset: 1351 Z,

Runway Information

Runway: 08
Length x Width: 13123 ft x 157 ft
Surface Type: concrete
TDZ-Elev: 709 ft
Lighting: Edge, ALS, Centerline, TDZ

Runway: 26
Length x Width: 13123 ft x 157 ft
Surface Type: concrete
TDZ-Elev: 783 ft
Lighting: Edge, ALS, Centerline

Communication Information

ATIS 130.9
ATIS 121.3 Non-English
Donets'k Tower 118.3
Donets'k Ground Control 119.0
Donets'k Radar Approach Control 134.0
Donets'k Radar Approach Control 126.35

DONETS'K Approach (R)	Apt Elev	Alt Set: hPa (MM on request)
134.0	783'	Trans level: By ATC Trans alt: 10010'

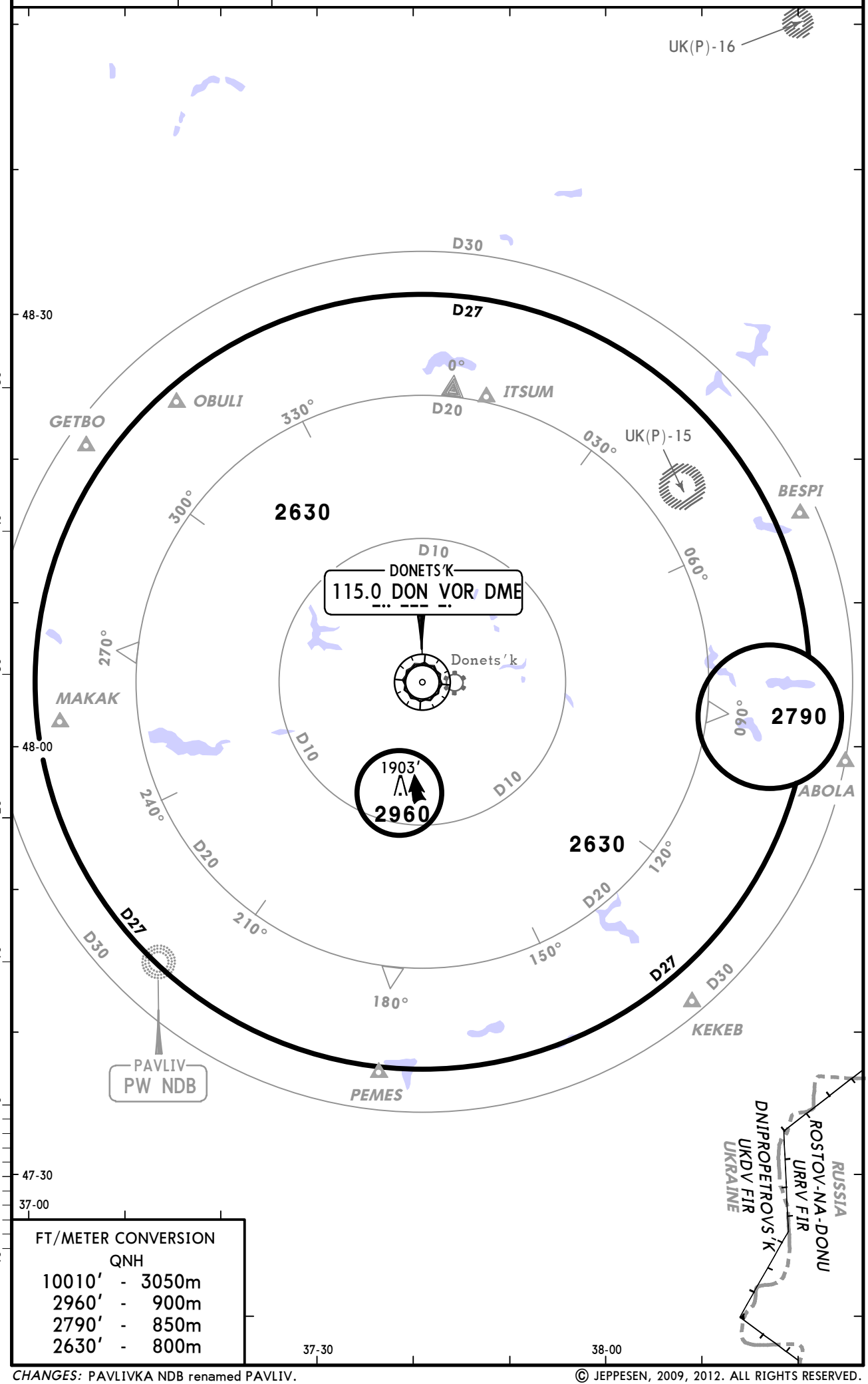

FT/METER CONVERSION QNH	
10010'	3050m
2960'	900m
2790'	850m
2630'	800m

CHANGES: PAVLIVKA NDB renamed PAVLIV.

© JEPPESEN, 2009, 2012. ALL RIGHTS RESERVED.

ATIS	Apt Elev	
130.9 (Russian 121.3)	783'	Alt Set: hPa (MM on request) Trans level: By ATC Trans alt: 10010'

BELOL TWO LIMA (BELOL 2L) *[BELO2L]*
LIPSO TWO LIMA (LIPSO 2L) *[LIPS2L]*
PAVLIV TWO LIMA (PW 2L)
RWY 08 ARRIVALS

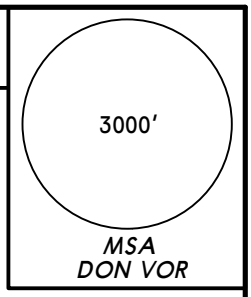

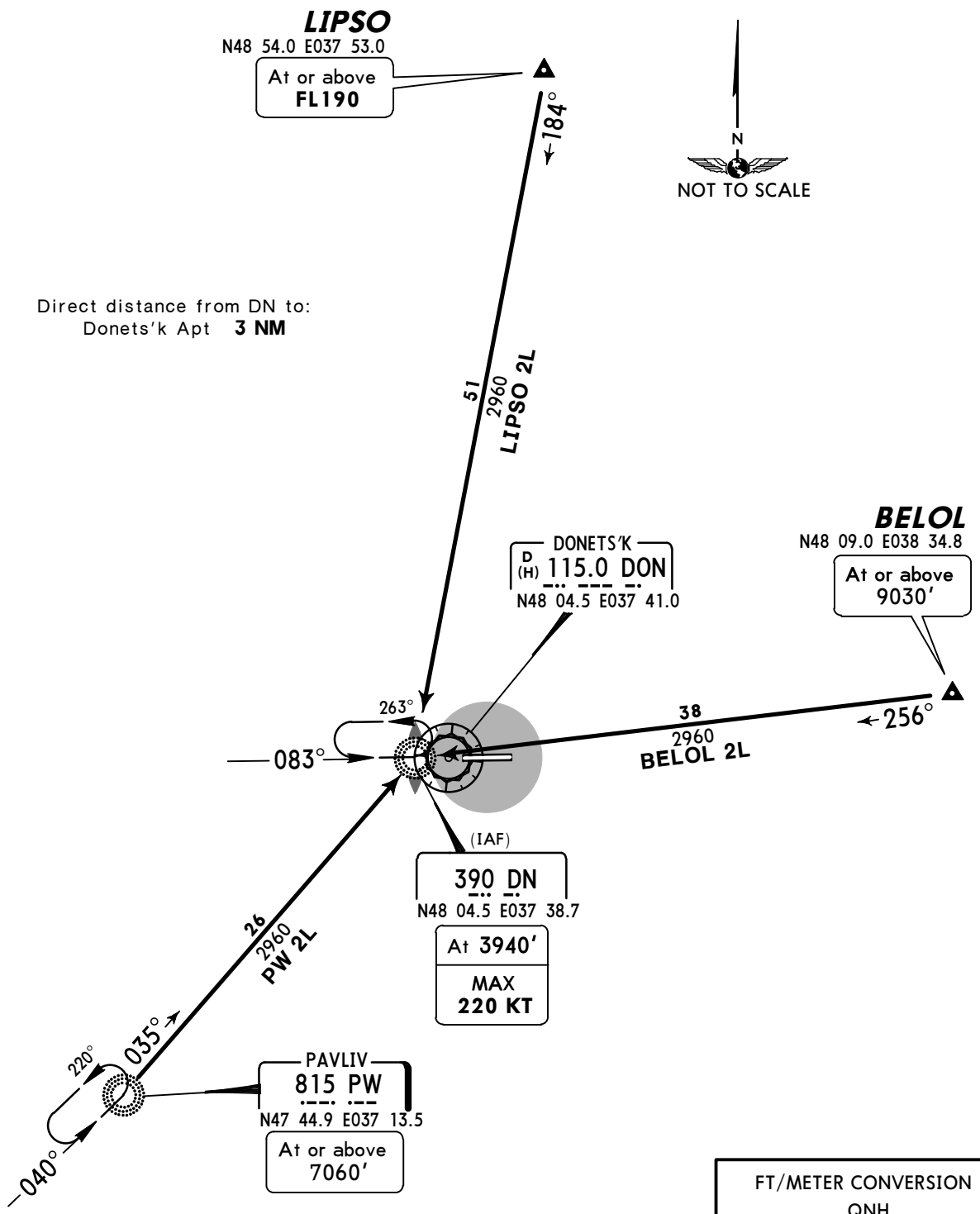

FT/METER CONVERSION
QNH

10010'	-	3050m
9030'	-	2750m
7060'	-	2150m
3940'	-	1200m

STAR	ROUTING
BELOL 2L	Intercept 256° bearing to DN.
LIPSO 2L	Intercept 184° bearing to DN.
PW 2L	Intercept 035° bearing to DN.

CHANGES: ATIS commissioned.

© JEPPESEN, 2011, 2012. ALL RIGHTS RESERVED.

ATIS	Apt Elev	
130.9 (Russian 121.3)	783'	Alt Set: hPa (MM on request) Trans level: By ATC Trans alt: 10010'

BELOL TWO NOVEMBER (BELOL 2N) *[BELO2N]*
LIPSO TWO NOVEMBER (LIPSO 2N) *[LIPS2N]*
PAVLIV TWO NOVEMBER (PW 2N)
RWY 26 ARRIVALS

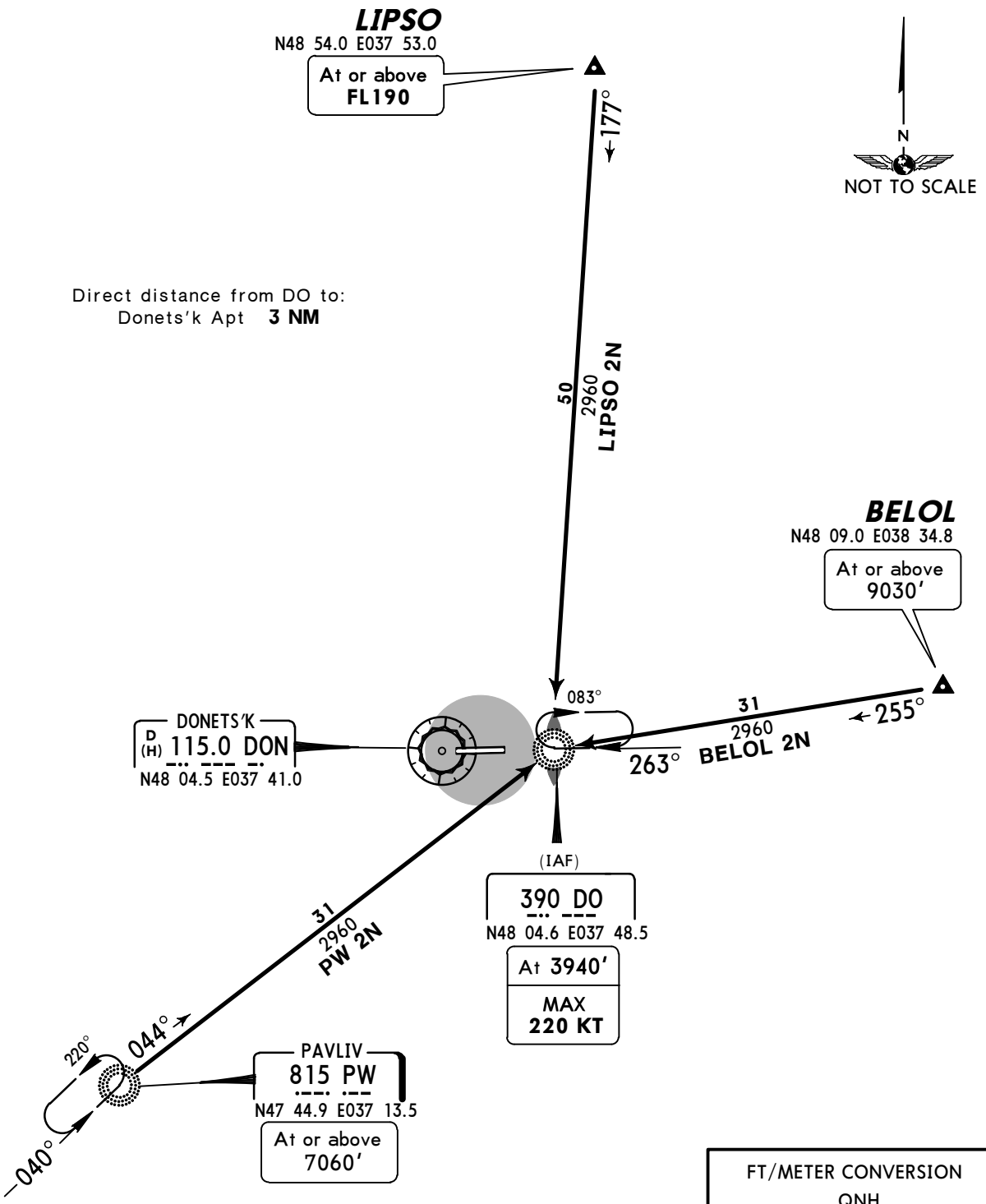

FT/METER CONVERSION
QNH

10010'	-	3050m
9030'	-	2750m
7060'	-	2150m
3940'	-	1200m

STAR	ROUTING
BELOL 2N	Intercept 255° bearing to DO.
LIPSO 2N	Intercept 177° bearing to DO.
PW 2N	Intercept 044° bearing to DO.

CHANGES: ATIS commissioned.

© JEPPESEN, 2011, 2012. ALL RIGHTS RESERVED.

ATIS	Apt Elev	
130.9 (Russian 121.3)	783'	Alt Set: hPa (MM on request) Trans level: By ATC Trans alt: 10010'

KOSIR ONE LIMA (KOSIR 1L) *[KOSI1L]*
PENAK ONE LIMA (PENAK 1L) *[PENA1L]*
RWY 08 ARRIVALS

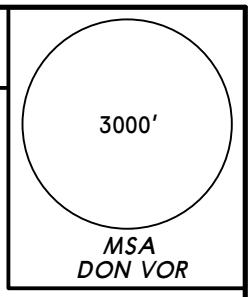

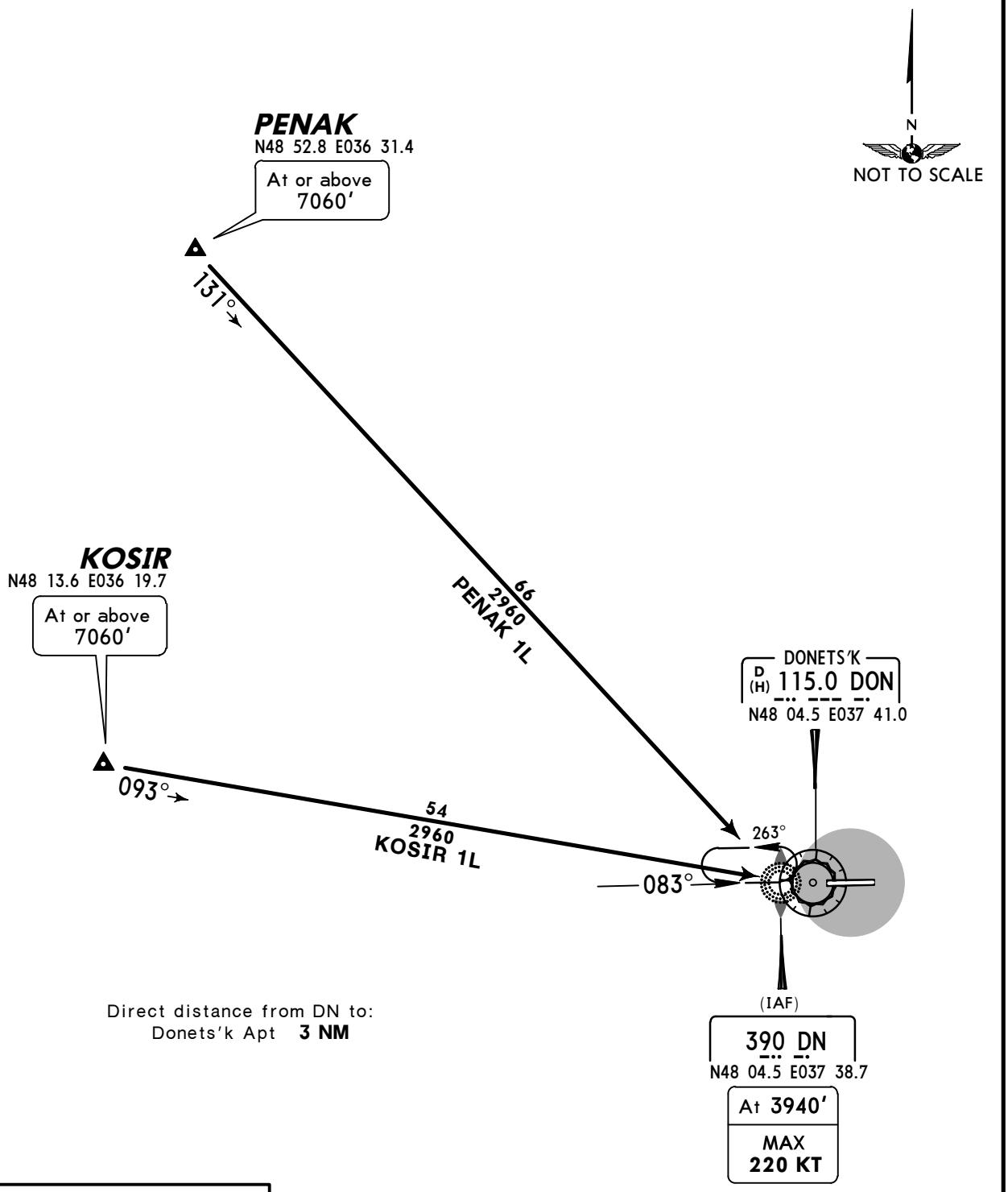

Direct distance from DN to:
Donets'k Apt **3 NM**

FT/METER CONVERSION QNH		
10010'	-	3050m
7060'	-	2150m
3940'	-	1200m

STAR	ROUTING
KOSIR 1L	Intercept 093° bearing to DN.
PENAK 1L	Intercept 131° bearing to DN.

CHANGES: STAR GUBKI 2L withdrawn.

© JEPPESEN, 2011, 2012. ALL RIGHTS RESERVED.

ATIS	Apt Elev	
130.9 (Russian 121.3)	783'	Alt Set: hPa (MM on request) Trans level: By ATC Trans alt: 10010'

KOSIR ONE NOVEMBER (KOSIR 1N) *[KOSI1N]*
PENAK ONE NOVEMBER (PENAK 1N) *[PENA1N]*
RWY 26 ARRIVALS

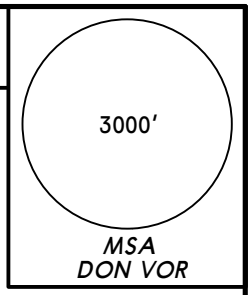

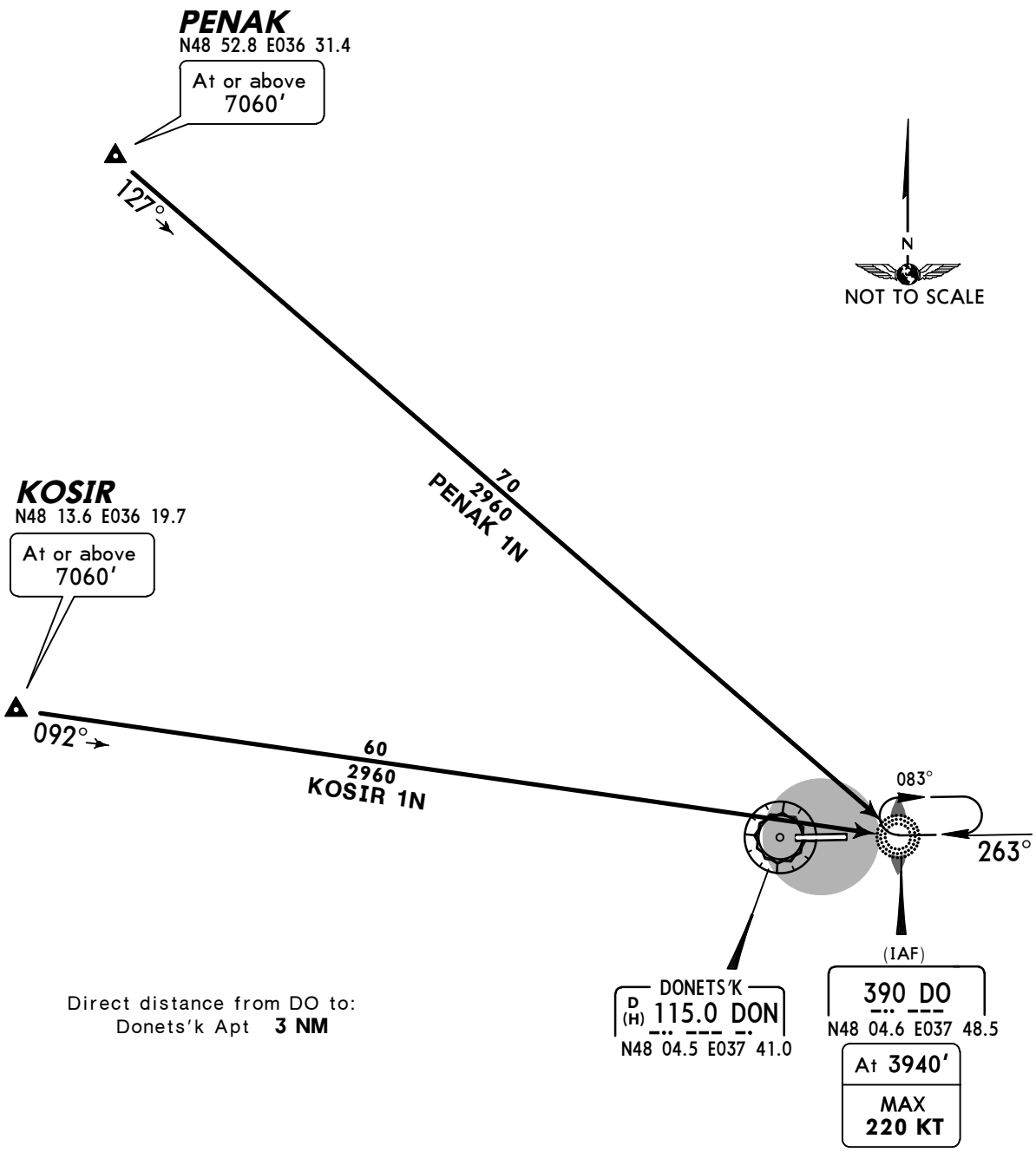

Direct distance from DO to:
Donets'k Apt **3 NM**

FT/METER CONVERSION
QNH

10010'	-	3050m
7060'	-	2150m
3940'	-	1200m

STAR	ROUTING
KOSIR 1N	Intercept 092° bearing to DO.
PENAK 1N	Intercept 127° bearing to DO.

CHANGES: STAR GUBKI 2N withdrawn.

© JEPPESEN, 2011, 2012. ALL RIGHTS RESERVED.

ATIS	Apt Elev	
130.9 (Russian 121.3)	783'	Alt Set: hPa (MM on request) Trans level: By ATC Trans alt: 10010' EXPECT RADAR vectors to final.

BELOL FOUR ROMEO (BELOL 4R) *[BELO4R]*
LIPSO THREE ROMEO (LIPSO 3R) *[LIPS3R]*
RWY 08 RNAV TRANSITIONS

RNAV (GNSS)
RNAV 1 (P-RNAV) APPROVAL REQUIRED
OTHERWISE ADVISE ATC

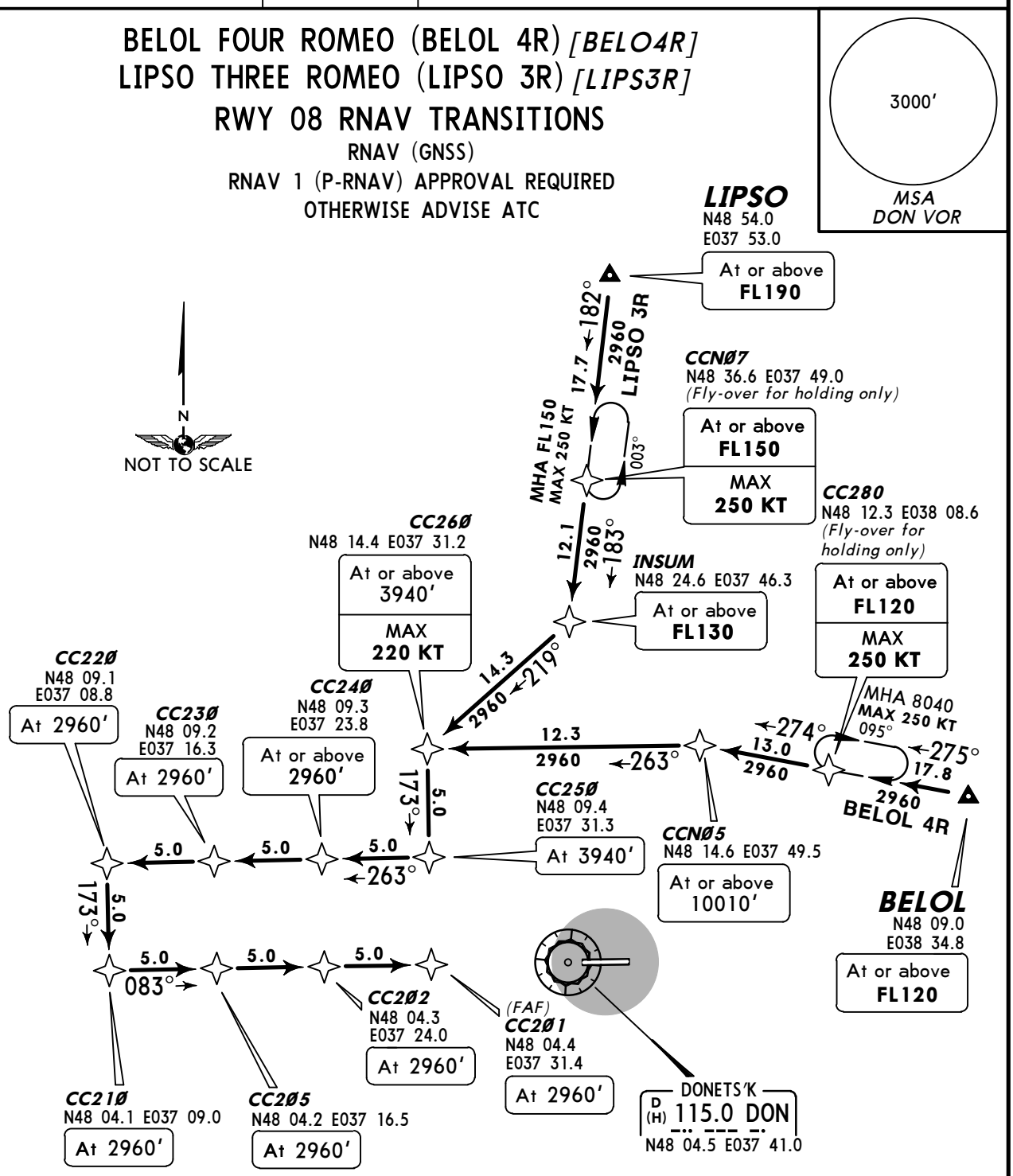

Direct distance from CC201 to:
Donets'k Apt 8 NM

FT/METER CONVERSION		
QNH		
10010'	-	3050m
8040'	-	2450m
3940'	-	1200m
2960'	-	900m

TRANSITION	ROUTING
BELOL 4R	BELOL (FL120+) - CC280 (FL120+; K250-) - CCN05 (10010'+) - CC260 (3940+; K220-) - CC250 (3940') - CC240 (2960'+) - CC230 (2960') - CC220 (2960') - CC210 (2960') - CC205 (2960') - CC202 (2960') - CC201 (2960').
LIPSO 3R	LIPSO (FL190+) - CCN07 (FL150+; K250-) - INSUM (FL130+) - CC260 (3940+; K220-) - CC250 (3940') - CC240 (2960'+) - CC230 (2960') - CC220 (2960') - CC210 (2960') - CC205 (2960') - CC202 (2960') - CC201 (2960').

CHANGES: RNAV STAR BELOL 3R renumbered 4R & revised; LIPSO 3R revised.

© JEPPESEN, 2011, 2013. ALL RIGHTS RESERVED.

ATIS	Apt Elev	
130.9 (Russian 121.3)	783'	Alt Set: hPa (MM on request) Trans level: By ATC Trans alt: 10010' EXPECT RADAR vectors to final.

3000'
MSA
DON VOR

BELOL TWO TANGO (BELOL 2T) *[BELO2T]*
RWY 26 RNAV TRANSITION
RNAV (GNSS)
RNAV 1 (P-RNAV) APPROVAL REQUIRED
OTHERWISE ADVISE ATC

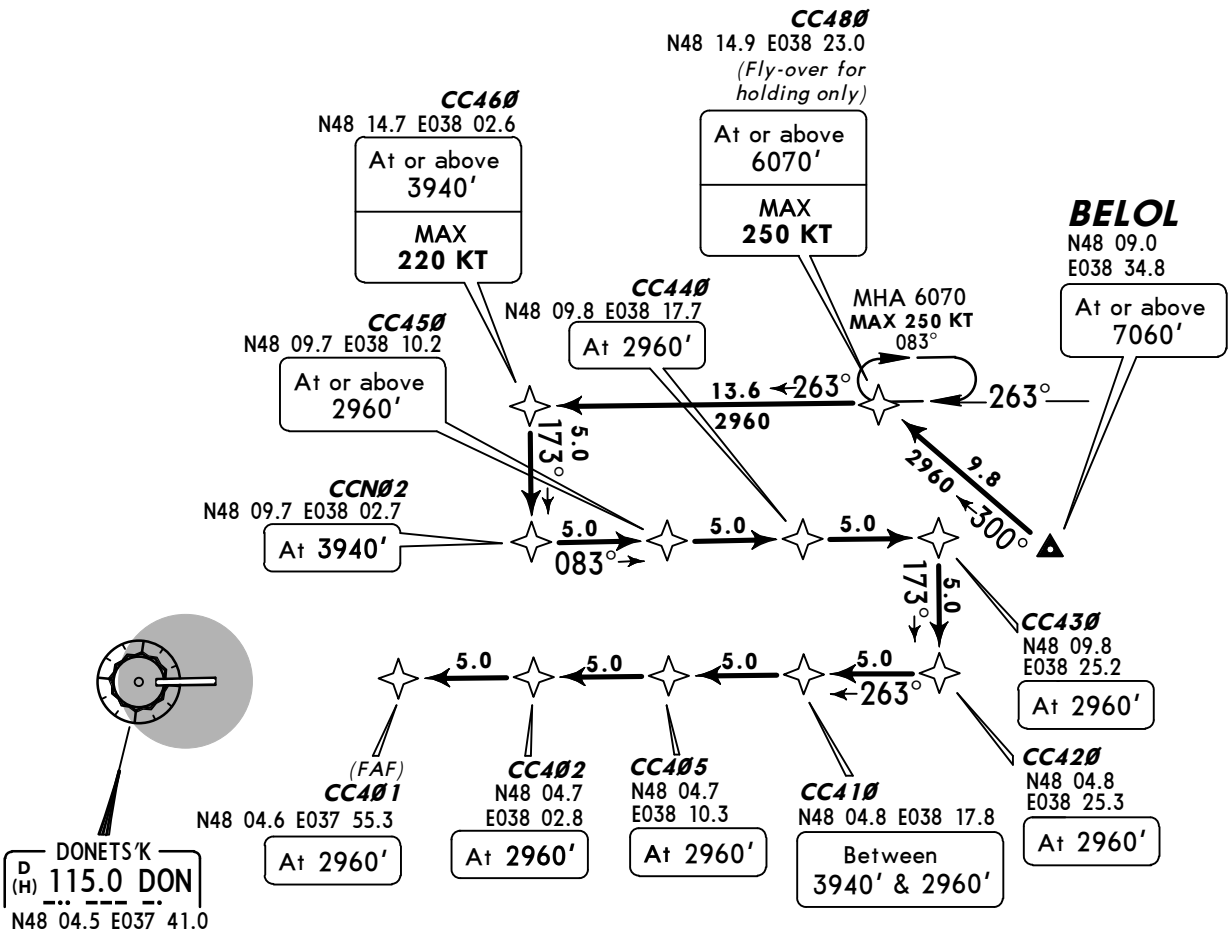

Direct distance from CC401 to:
Donets'k Apt 8NM

N
NOT TO SCALE

FT/METER CONVERSION QNH	
10010'	3050m
7060'	2150m
6070'	1850m
3940'	1200m
2960'	900m

ROUTING

BELOL (7060'+) - CC480 (6070+; K250-) - CC460 (3940+; K220-) - CCN02 (3940') - CC450 (2960'+) - CC440 (2960') - CC430 (2960') - CC420 (2960') - CC410 (3940-; 2960'+) - CC405 (2960') - CC402 (2960') - CC401 (2960').

CHANGES: None.

© JEPPESEN, 2011, 2013. ALL RIGHTS RESERVED.

ATIS	Apt Elev	
130.9(Russian 121.3)	783'	Alt Set: hPa (MM on request) Trans level: By ATC Trans alt: 10010' EXPECT RADAR vectors to final.

PAVLIV TWO ROMEO (PW 2R)
RWY 08 RNAV TRANSITION

RNAV (GNSS)
RNAV 1 (P-RNAV) APPROVAL REQUIRED
OTHERWISE ADVISE ATC

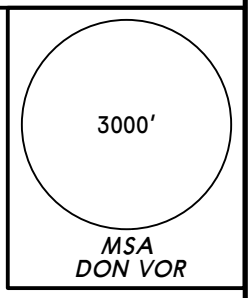

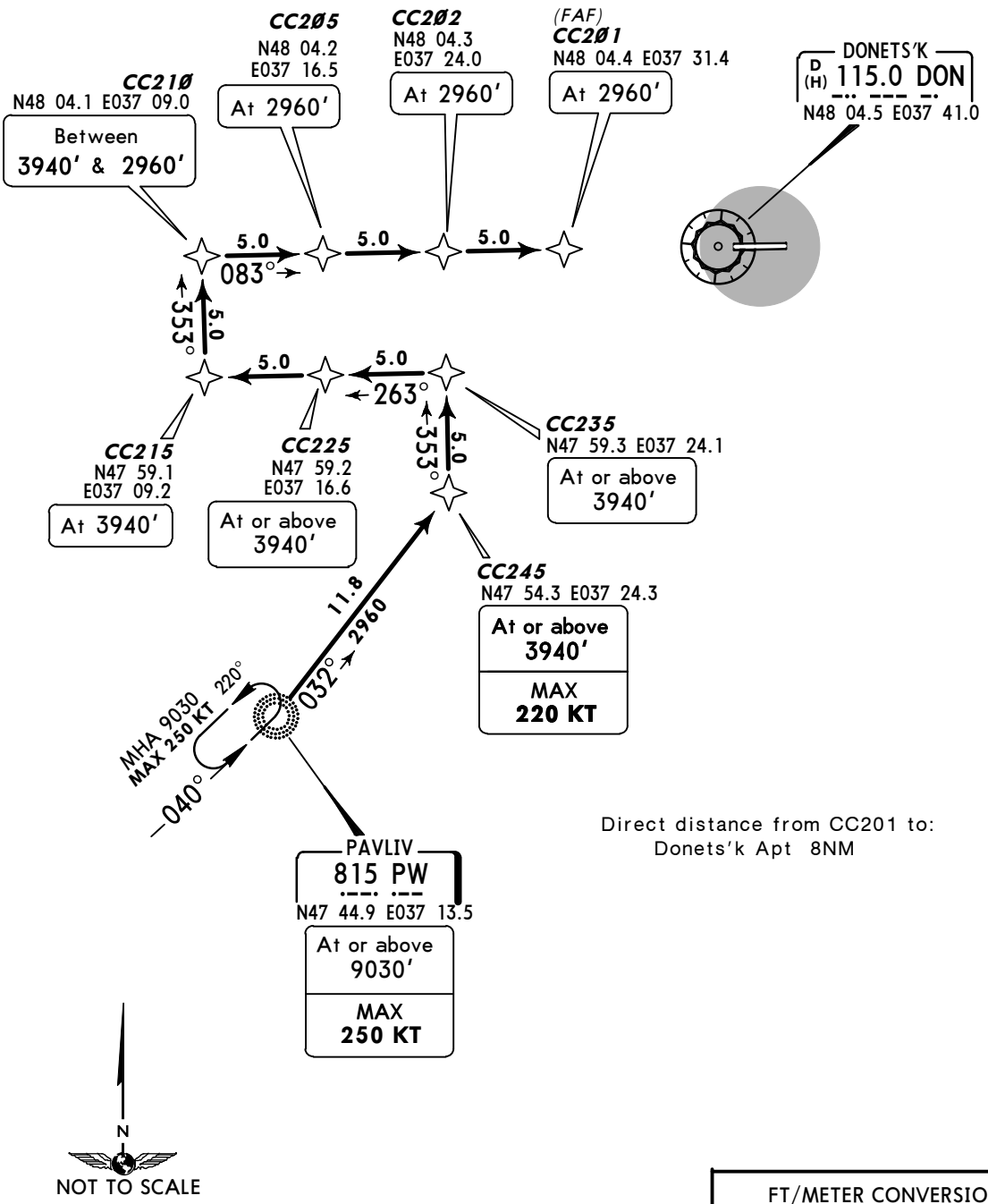

Direct distance from CC201 to:
Donets'k Apt 8NM

FT/METER CONVERSION
QNH

10010'	-	3050m
9030'	-	2750m
3940'	-	1200m
2960'	-	900m

ROUTING

PW (9030'+; K250-) - CC245 (3940'+; K220-) - CC235 (3940'+) - CC225 (3940'+) - CC215 (3940') - CC210 (3940'-; 2960'+) - CC205 (2960') - CC202 (2960') - CC201 (2960').

CHANGES: Crossings at CC210 & PW revised.

© JEPPESEN, 2012, 2013. ALL RIGHTS RESERVED.

ATIS	Apt Elev	
130.9 (Russian 121.3)	783'	Alt Set: hPa (MM on request) Trans level: By ATC Trans alt: 10010' EXPECT RADAR vectors to final.

3000'
MSA
DON VOR

PAVLIV TWO TANGO (PW 2T)
RWY 26 RNAV TRANSITION

RNAV (GNSS)
RNAV 1 (P-RNAV) APPROVAL REQUIRED
OTHERWISE ADVISE ATC

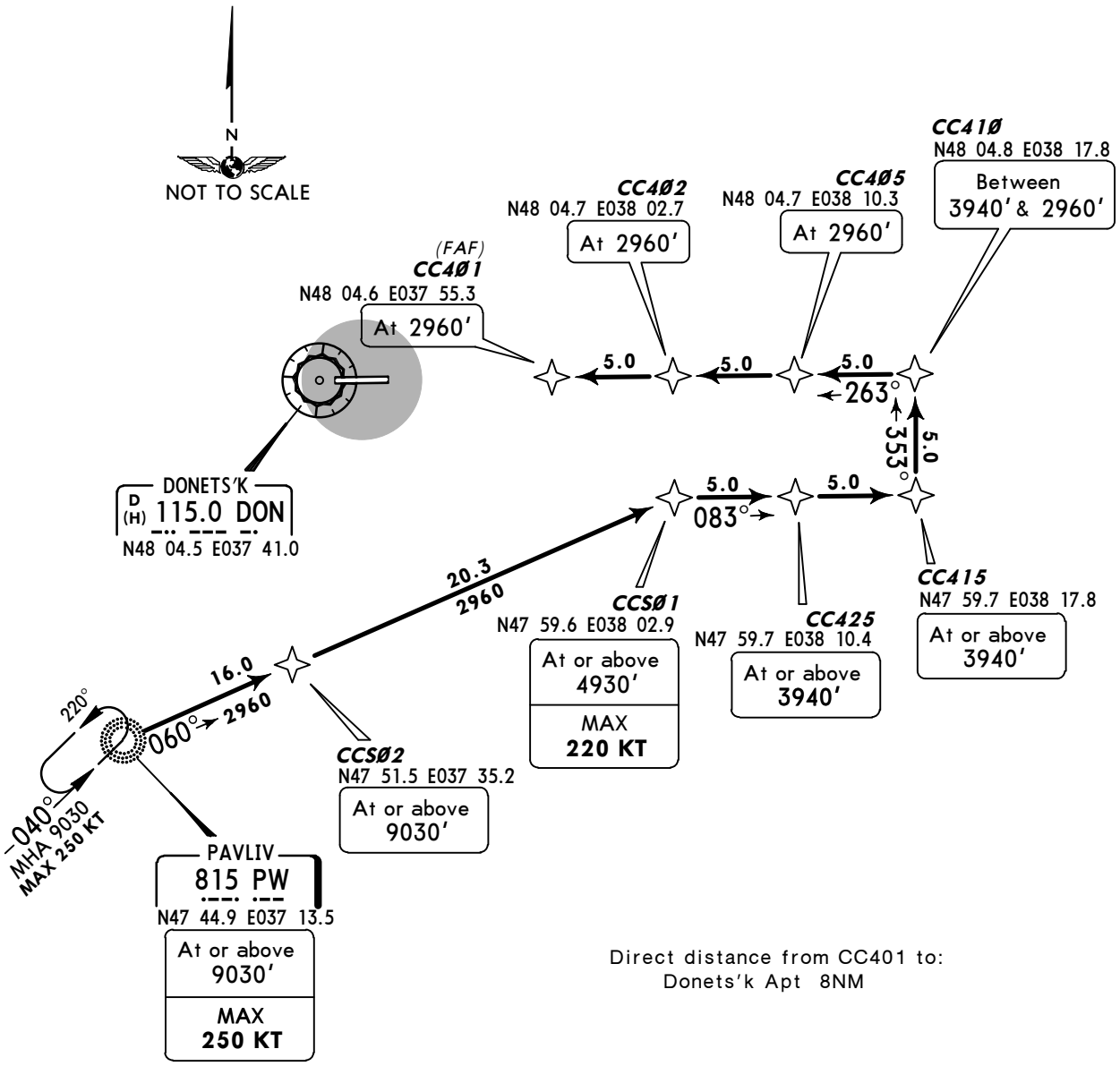

Direct distance from CC401 to:
Donets'k Apt 8NM

FT/METER CONVERSION QNH		
10010'	-	3050m
9030'	-	2750m
4930'	-	1500m
3940'	-	1200m
2960'	-	900m

ROUTING

PW (9030'+; K250-) - CCS02 (9030'+) - CCS01 (4930'+; K220-) - CC425 (3940'+) - CC415 (3940'+) - CC410 (3940'-; 2960'+) - CC405 (2960') - CC402 (2960') - CC401 (2960').

CHANGES: None.

© JEPPESEN, 2012, 2013. ALL RIGHTS RESERVED.

ATIS	Apt Elev	
130.9 (Russian 121.3)	783'	Alt Set: hPa (MM on request) Trans level: By ATC Trans alt: 10010' EXPECT RADAR vectors to final.

3000'
MSA
DON VOR

KOSIR TWO ROMEO (KOSIR 2R) *[KOSI2R]*
PENAK TWO ROMEO (PENAK 2R) *[PENA2R]*
RWY 08 RNAV TRANSITIONS

RNAV (GNSS)
RNAV 1 (P-RNAV) APPROVAL REQUIRED
OTHERWISE ADVISE ATC

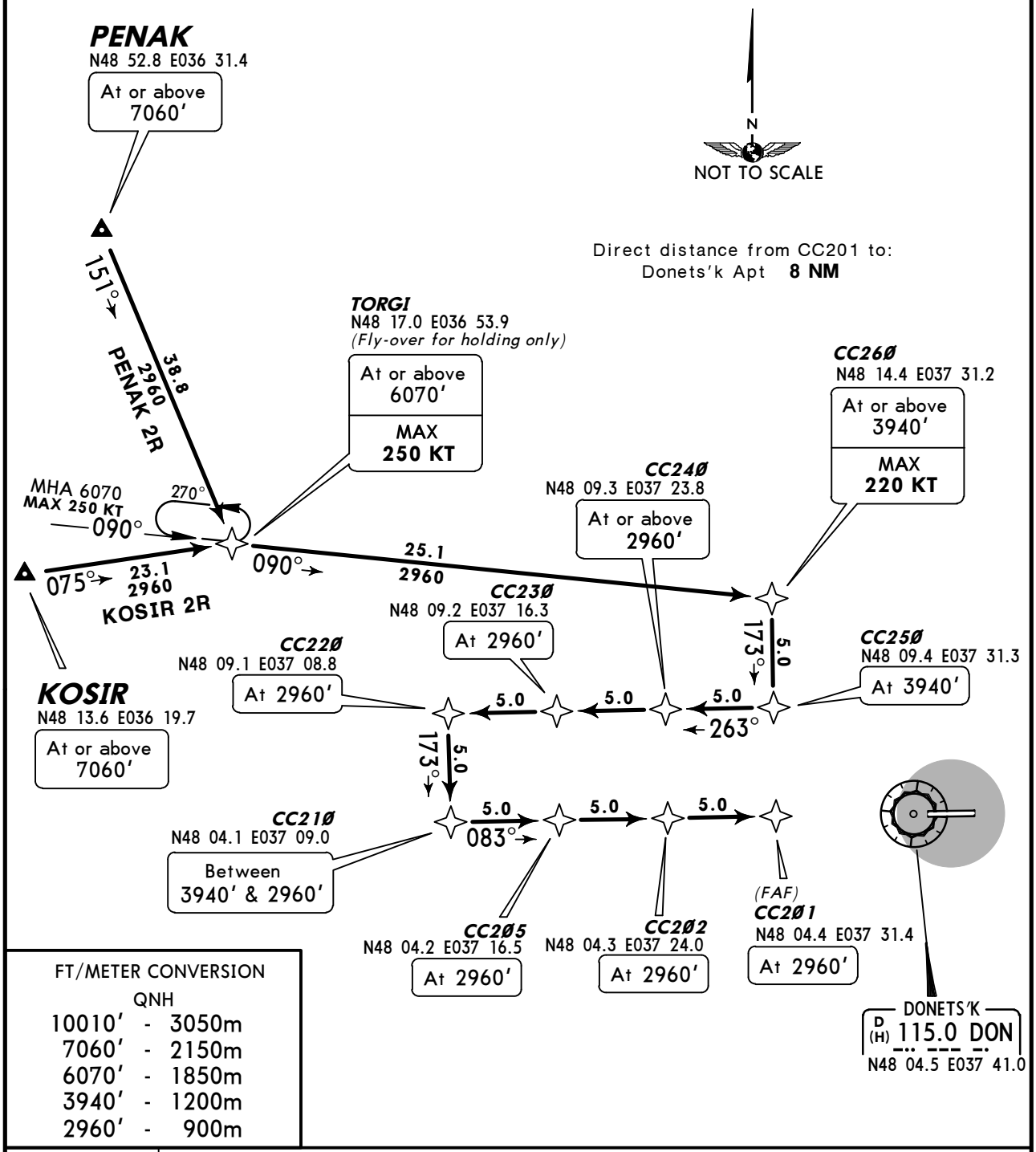

FT/METER CONVERSION
QNH

10010'	-	3050m
7060'	-	2150m
6070'	-	1850m
3940'	-	1200m
2960'	-	900m

TRANSITION	ROUTING
KOSIR 2R	KOSIR (7060'+) - TORGI (6070'+; K250-).
PENAK 2R	PENAK (7060'+) - TORGI (6070'+; K250-).

ROUTING

TORGI (6070'+; K250-) - CC260 (3940+; K220-) - CC250 (3940') - CC240 (2960'+) - CC230 (2960') - CC220 (2960') - CC210 (3940-; 2960'+) - CC205 (2960') - CC202 (2960') - CC201 (2960').

CHANGES: RNAV sensor.

© JEPPESEN, 2012, 2013. ALL RIGHTS RESERVED.

ATIS	Apt Elev	
130.9 (Russian 121.3)	783'	Alt Set: hPa (MM on request) Trans level: By ATC Trans alt: 10010' EXPECT RADAR vectors to final.

3000'
MSA
DON VOR

KOSIR THREE TANGO (KOSIR 3T) *[KOSI3T]*
LIPSO THREE TANGO (LIPSO 3T) *[LIPS3T]*
PENAK THREE TANGO (PENAK 3T) *[PENA3T]*
RWY 26 RNAV TRANSITIONS

RNAV (GNSS)
RNAV 1 (P-RNAV) APPROVAL REQUIRED
OTHERWISE ADVISE ATC

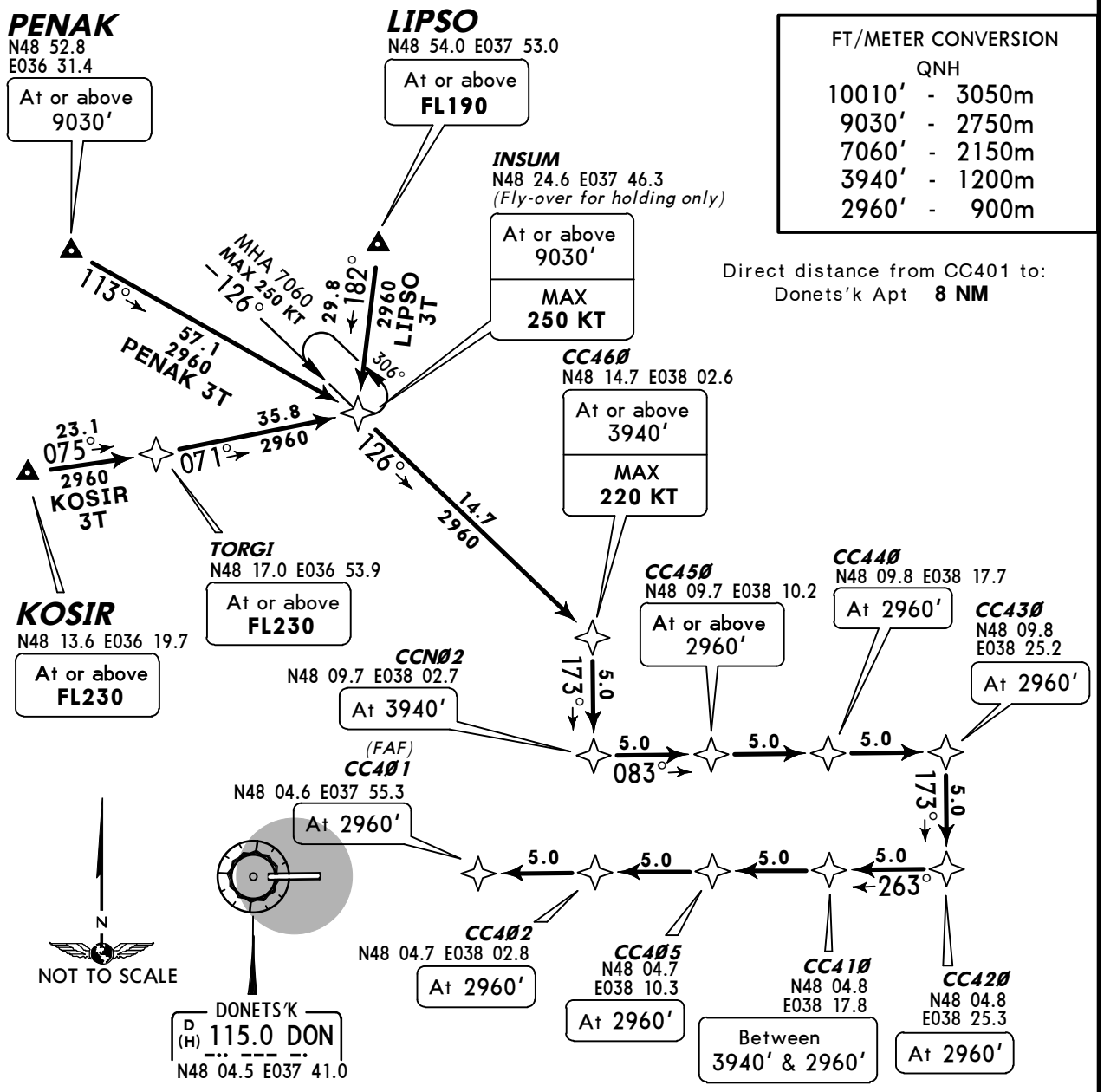

FT/METER CONVERSION
QNH

10010'	-	3050m
9030'	-	2750m
7060'	-	2150m
3940'	-	1200m
2960'	-	900m

Direct distance from CC401 to:
Donets'k Apt **8 NM**

TRANSITION	ROUTING
KOSIR 3T	KOSIR (FL230+) - TORGI (FL230+) - INSUM (9030'+; K250-).
LIPSO 3T	LIPSO(FL190+) - INSUM (9030'+; K250-).
PENAK 3T	PENAK (9030'+) - INSUM (9030'+; K250-).

ROUTING

INSUM (9030'+; K250-) - CC460 (3940+; K220-) - CCN02 (3940') - CC450 (2960'+) - CC440 (2960') - CC430 (2960') - CC420 (2960') - CC410 (3940-; 2960'+) - CC405 (2960') - CC402 (2960') - CC401 (2960').

CHANGES: RNAV sensor.

© JEPPESEN, 2012, 2013. ALL RIGHTS RESERVED.

Apt Elev	Trans level: By ATC Trans alt: 10010'
783'	

ABOLA ONE PAPA (ABOLA 1P) [ABOL1P]
LIPSO THREE PAPA (LIPSO 3P) [LIPS3P]
PEMES ONE PAPA (PEMES 1P) [PEME1P]
PETOG TWO PAPA (PETOG 2P) [PETO2P]
RWY 08 RNAV DEPARTURES

RNAV (GNSS)

RNAV 1 (P-RNAV) APPROVAL REQUIRED
OTHERWISE ADVISE ATC

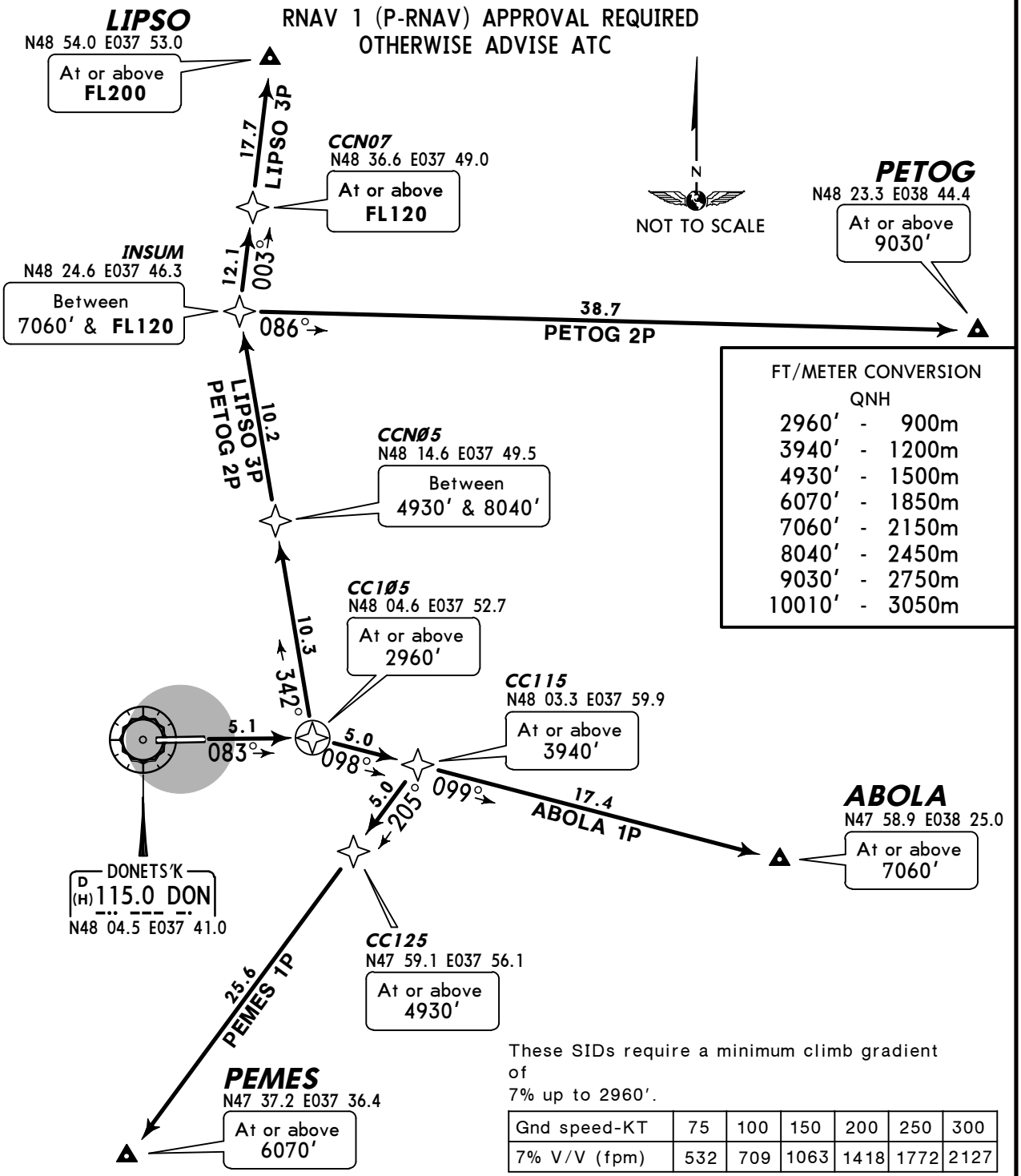

FT/METER CONVERSION
QNH

2960'	-	900m
3940'	-	1200m
4930'	-	1500m
6070'	-	1850m
7060'	-	2150m
8040'	-	2450m
9030'	-	2750m
10010'	-	3050m

These SIDs require a minimum climb gradient of
7% up to 2960'.

Gnd speed-KT	75	100	150	200	250	300
7% V/V (fpm)	532	709	1063	1418	1772	2127

If unable to comply advise ATC.

SID	ROUTING
ABOLA 1P	CC105 (2960'+) - CC115 (3940'+) - ABOLA (7060'+).
LIPSO 3P	CC105 (2960'+) - CCN05 (4930'+; 8040'-) - INSUM (7060'+; FL120-) - CCN07 (FL120+) - LIPSO (FL200+).
PEMES 1P	CC105 (2960'+) - CC115 (3940'+) - CC125 (4930'+) - PEMES (6070'+).
PETOG 2P	CC105 (2960'+) - CCN05 (4930'+; 8040'-) - INSUM (7060'+; FL120-) - PETOG (9030'+).

CHANGES: RNAV SID PETOG 2B crossing at INSUM revised.

© JEPPESEN, 2011, 2013. ALL RIGHTS RESERVED.

Apt Elev	Trans level: By ATC Trans alt: 10010'
783'	

3000'
MSA
DON VOR

ABOLA ONE SIERRA (ABOLA 1S) [ABOL1S]
LIPSO THREE SIERRA (LIPSO 3S) [LIPS3S]
PEMES ONE SIERRA (PEMES 1S) [PEME1S]
PETOG ONE SIERRA (PETOG 1S) [PETO1S]
RWY 26 RNAV DEPARTURES

RNAV (GNSS)
RNAV 1 (P-RNAV) APPROVAL REQUIRED
OTHERWISE ADVISE ATC

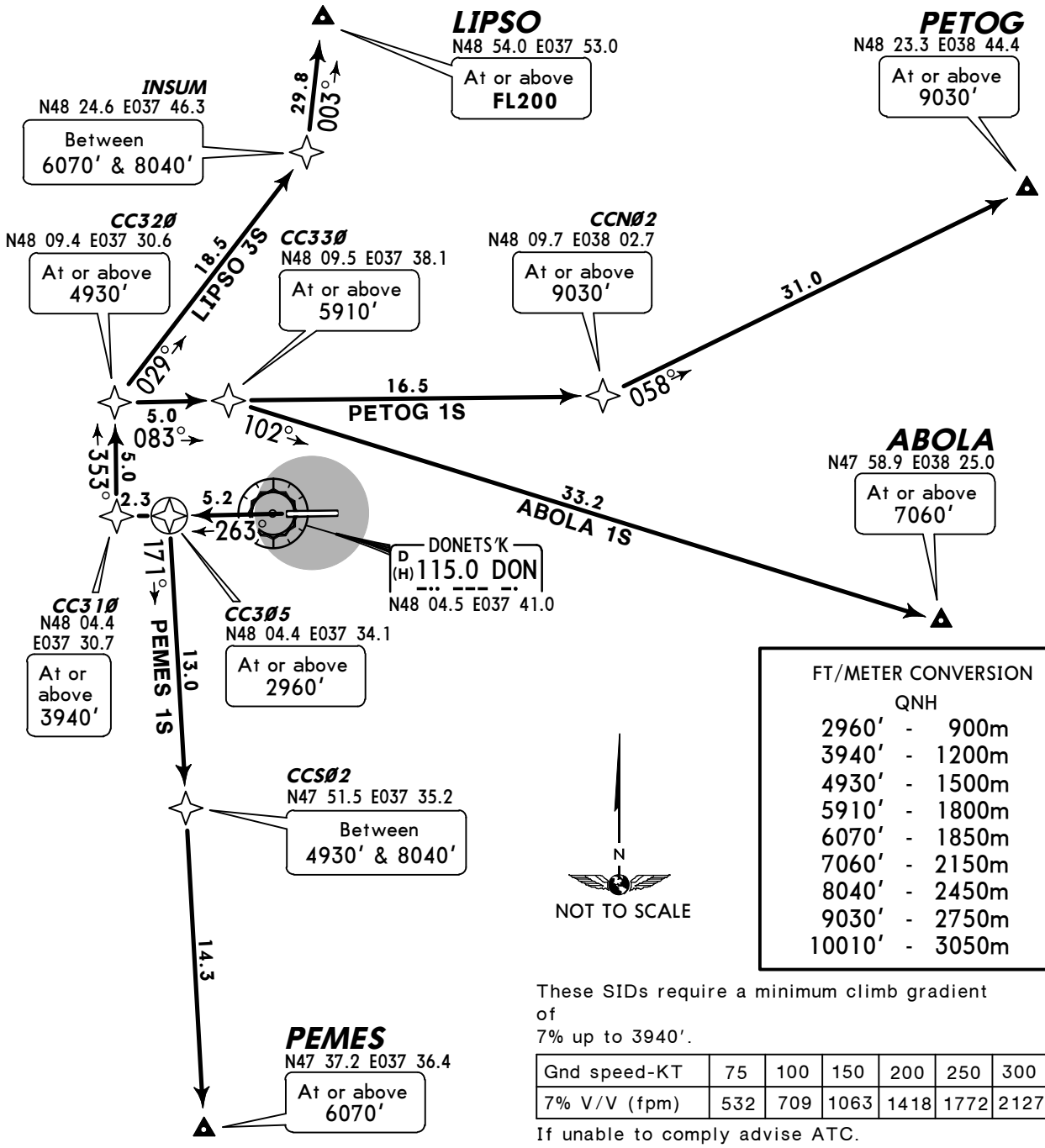

FT/METER CONVERSION
QNH

2960'	-	900m
3940'	-	1200m
4930'	-	1500m
5910'	-	1800m
6070'	-	1850m
7060'	-	2150m
8040'	-	2450m
9030'	-	2750m
10010'	-	3050m

These SIDs require a minimum climb gradient of
7% up to 3940'.

Gnd speed-KT	75	100	150	200	250	300
7% V/V (fpm)	532	709	1063	1418	1772	2127

If unable to comply advise ATC.

SID	ROUTING
ABOLA 1S	CC305 (2960'+) - CC310 (3940'+) - CC320 (4930'+) - CC330 (5910'+) - ABOLA (7060'+).
LIPSO 3S	CC305 (2960'+) - CC310 (3940'+) - CC320 (4930'+) - INSUM (6070'+; 8040'-) - LIPSO (FL200+).
PEMES 1S	CC305 (2960'+) - CCS02 (4930'+; 8040'-) - PEMES (6070'+).
PETOG 1S	CC305 (2960'+) - CC310 (3940'+) - CC320 (4930'+) - CC330 (5910'+) - CCN02 (9030'+) - PETOG (9030'+).

CHANGES: None.

© JEPPESEN, 2011, 2013. ALL RIGHTS RESERVED.

Apt Elev	Trans level: By ATC Trans alt: 10010'
783'	

KOSIR ONE PAPA (KOSIR 1P) *[KOSI1P]*
MAKAK ONE PAPA (MAKAK 1P) *[MAKA1P]*
PENAK TWO PAPA (PENAK 2P) *[PENA2P]*
TAGAN TWO PAPA (TAGAN 2P) *[TAGA2P]*
RWY 08 RNAV DEPARTURES

RNAV (GNSS)
RNAV 1 (P-RNAV) APPROVAL REQUIRED
OTHERWISE ADVISE ATC

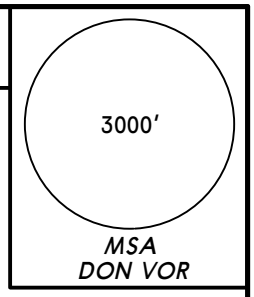

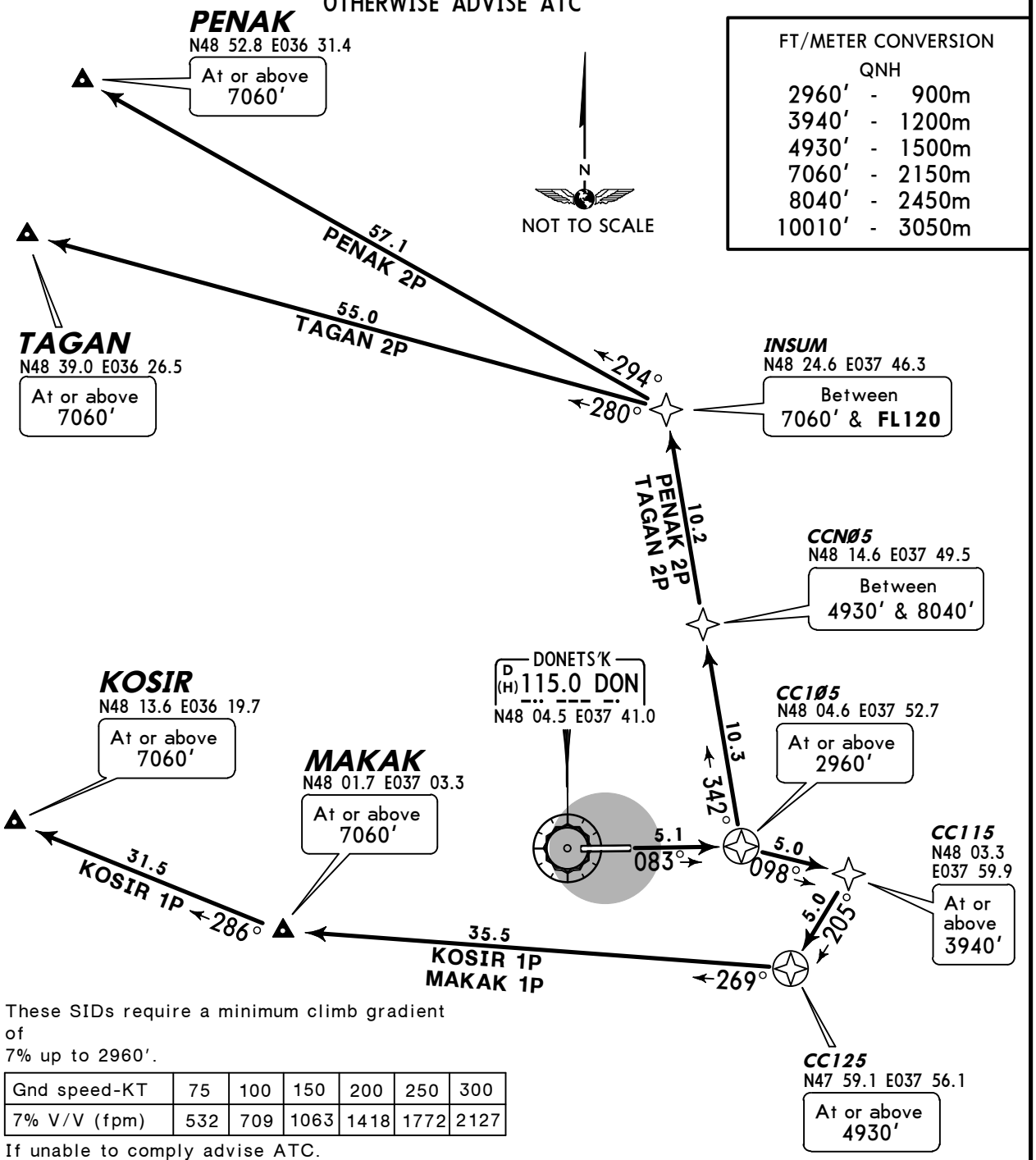

FT/METER CONVERSION		
QNH		
2960'	-	900m
3940'	-	1200m
4930'	-	1500m
7060'	-	2150m
8040'	-	2450m
10010'	-	3050m

These SIDs require a minimum climb gradient of
7% up to 2960'.

Gnd speed-KT	75	100	150	200	250	300
7% V/V (fpm)	532	709	1063	1418	1772	2127

If unable to comply advise ATC.

SID	ROUTING
KOSIR 1P	CC105 (2960'+) - CC115 (3940'+) - CC125 (4930'+) - MAKAK (7060'+) - KOSIR (7060'+).
MAKAK 1P	CC105 (2960'+) - CC115 (3940'+) - CC125 (4930'+) - MAKAK (7060'+).
PENAK 2P	CC105 (2960'+) - CCN05 (4930'+; 8040'-) - INSUM (7060'+; FL120-) - PENAK (7060'+).
TAGAN 2P	CC105 (2960'+) - CCN05 (4930'+; 8040'-) - INSUM (7060'+; FL120-) - TAGAN (7060'+).

CHANGES: Crossing at INSUM revised.

© JEPPESEN, 2011, 2013. ALL RIGHTS RESERVED.

Apt Elev 783′	Trans level: By ATC Trans alt: 10010′

KOSIR ONE SIERRA (KOSIR 1S) *[KOSI1S]*
MAKAK ONE SIERRA (MAKAK 1S) *[MAKA1S]*
PENAK ONE SIERRA (PENAK 1S) *[PENA1S]*
TAGAN ONE SIERRA (TAGAN 1S) *[TAGA1S]*
RWY 26 RNAV DEPARTURES

RNAV (GNSS)
RNAV 1 (P-RNAV) APPROVAL REQUIRED
OTHERWISE ADVISE ATC

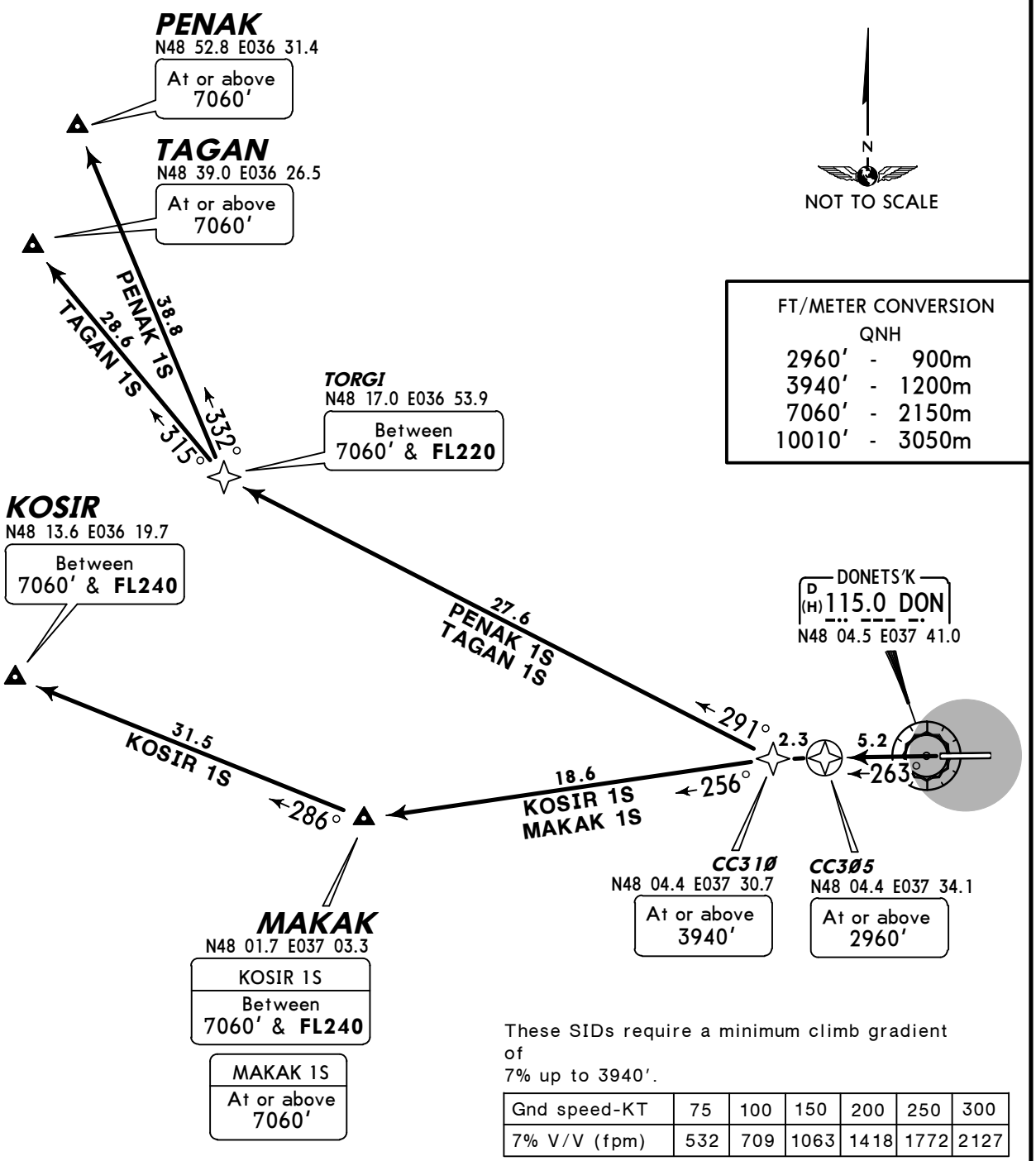

FT/METER CONVERSION QNH		
2960′	-	900m
3940′	-	1200m
7060′	-	2150m
10010′	-	3050m

These SIDs require a minimum climb gradient of
7% up to 3940′.

Gnd speed-KT	75	100	150	200	250	300
7% V/V (fpm)	532	709	1063	1418	1772	2127

If unable to comply advise ATC.

SID	ROUTING
KOSIR 1S	CC305 (2960′+) - CC310 (3940′+) - MAKAK (7060′+; FL240-) - KOSIR (7060′+; FL240-).
MAKAK 1S	CC305 (2960′+) - CC310 (3940′+) - MAKAK (7060′+).
PENAK 1S	CC305 (2960′+) - CC310 (3940′+) - TORGI (7060′+; FL220-) - PENAK (7060′+).
TAGAN 1S	CC305 (2960′+) - CC310 (3940′+) - TORGI (7060′+; FL220-) - TAGAN (7060′+).

CHANGES: None.

© JEPPESEN, 2011, 2013. ALL RIGHTS RESERVED.

Apt Elev 783′	Trans level: By ATC Trans alt: 10010′

3000′
MSA
DON VOR

ABOLA ONE KILO (ABOLA 1K) [ABOL1K]
LIPSO TWO KILO (LIPSO 2K) [LIPS2K]
PEMES ONE KILO (PEMES 1K) [PEME1K]
PETOG ONE KILO (PETOG 1K) [PETO1K]
RWY 08 DEPARTURES

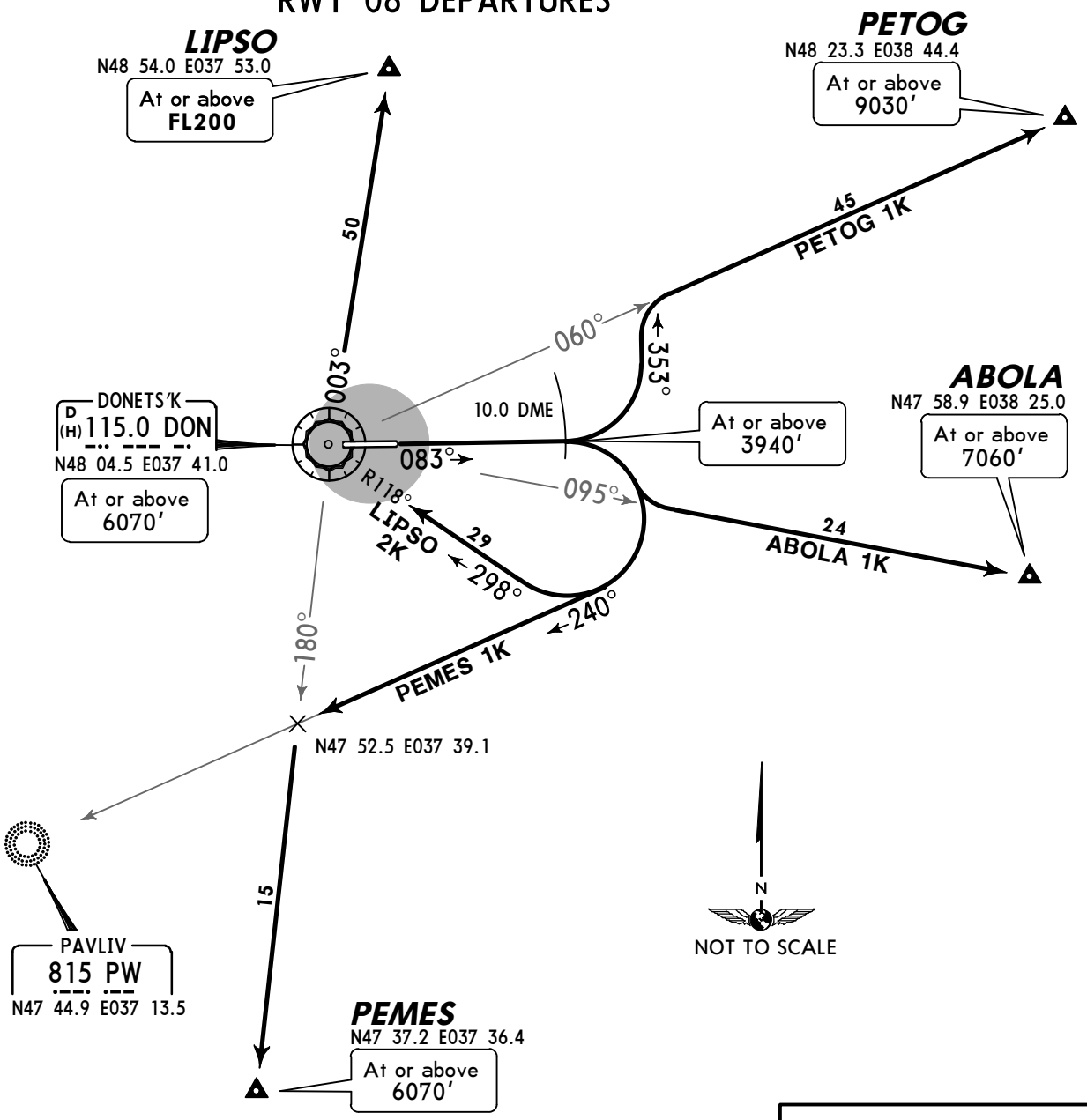

These SIDs require a minimum climb gradient of
7% up to 3940′.

Gnd speed-KT	75	100	150	200	250	300
7% V/V (fpm)	532	709	1063	1418	1772	2127

If unable to comply advise ATC.

FT/METER CONVERSION
QNH

3940′	-	1200m
6070′	-	1850m
7060′	-	2150m
9030′	-	2750m
10010′	-	3050m

SID	ROUTING
ABOLA 1K	Climb on 083° track to at or above 3940′ at DON 10.0 DME, turn RIGHT, intercept DON R-095 to ABOLA.
LIPSO 2K	Climb on 083° track to at or above 3940′ at DON 10.0 DME, turn RIGHT, intercept DON R-118 inbound to DON, turn RIGHT, DON R-003 to LIPSO.
PEMES 1K	Climb on 083° track to at or above 3940′ at DON 10.0 DME, turn RIGHT, intercept 240° bearing towards PW, intercept DON R-180 to PEMES.
PETOG 1K	Climb on 083° track to at or above 3940′ at DON 10.0 DME, turn LEFT, 353° track, intercept DON R-060 to PETOG.

CHANGES: SID LIPSO 1K renumbered 2K & revised.

© JEPPESEN, 2011, 2012. ALL RIGHTS RESERVED.

Apt Elev 783′	Trans level: By ATC Trans alt: 10010′

3000′
MSA
DON VOR

ABOLA ONE MIKE (ABOLA 1M) [ABOL1M]
LIPSO TWO MIKE (LIPSO 2M) [LIPS2M]
PEMES ONE MIKE (PEMES 1M) [PEME1M]
PETOG ONE MIKE (PETOG 1M) [PETO1M]
RWY 26 DEPARTURES

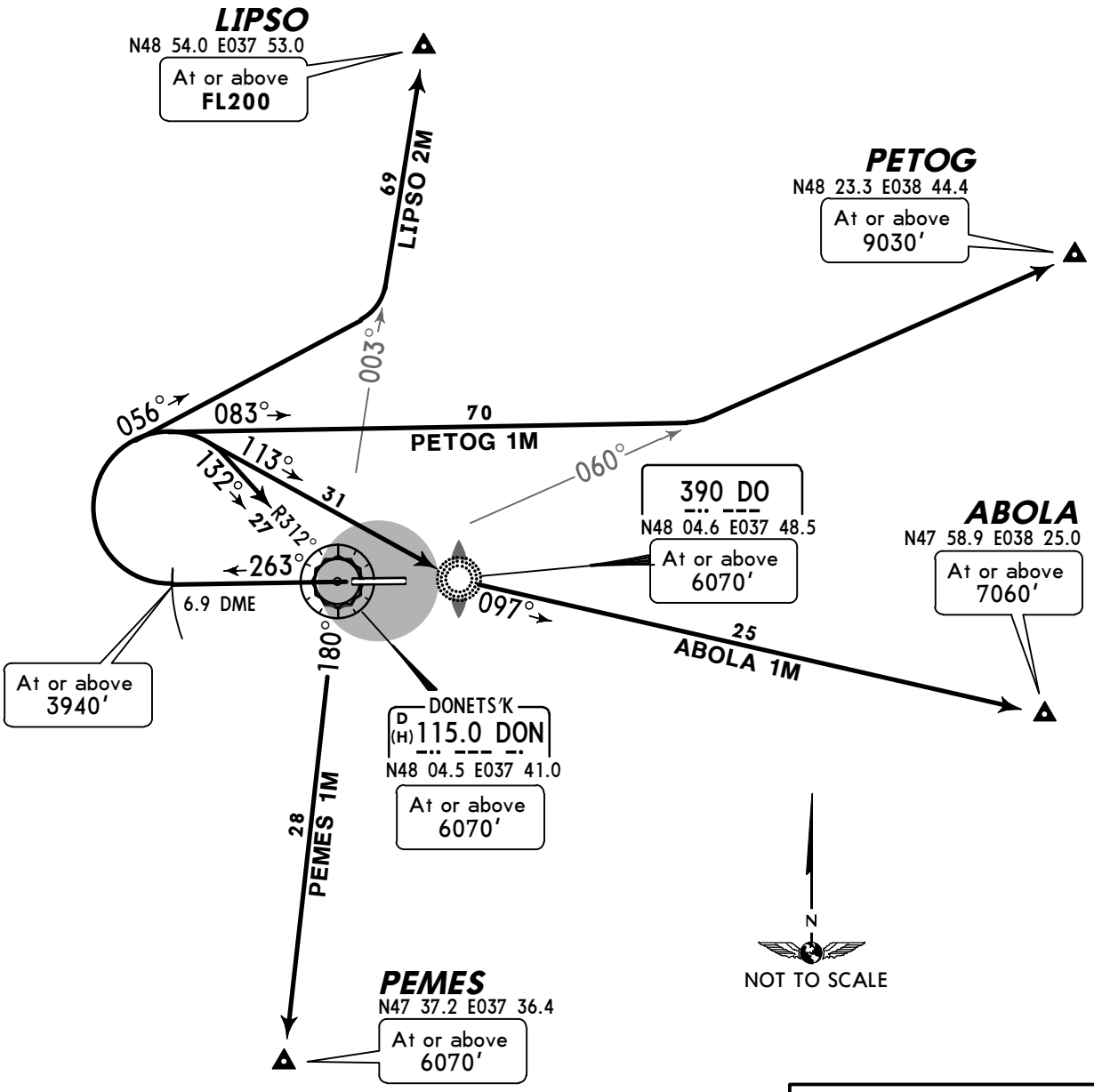

These SIDs require a minimum climb gradient of
7% up to 3940′.

Gnd speed-KT	75	100	150	200	250	300
7% V/V (fpm)	532	709	1063	1418	1772	2127

If unable to comply advise ATC.

FT/METER CONVERSION
QNH

3940′	-	1200m
6070′	-	1850m
7060′	-	2150m
9030′	-	2750m
10010′	-	3050m

SID	ROUTING
ABOLA 1M	Climb on 263° track to at or above 3940′ at DON 6.9 DME, turn RIGHT, intercept 113° bearing to DO, turn LEFT, 097° bearing to ABOLA.
LIPSO 2M	Climb on 263° track to at or above 3940′ at DON 6.9 DME, turn RIGHT, 056° track, intercept DON R-003 to LIPSO.
PEMES 1M	Climb on 263° track to at or above 3940′ at DON 6.9 DME, turn RIGHT, intercept DON R-312 inbound to DON, turn RIGHT, DON R-180 to PEMES.
PETOG 1M	Climb on 263° track to at or above 3940′ at DON 6.9 DME, turn RIGHT, 083° track, intercept DON R-060 to PETOG.

CHANGES: SID LIPSO 1M renumbered 2M & revised.

© JEPPESEN, 2011, 2012. ALL RIGHTS RESERVED.

Apt Elev 783′	Trans level: By ATC Trans alt: 10010′

KOSIR ONE KILO (KOSIR 1K) *[KOSI1K]*
MAKAK ONE KILO (MAKAK 1K) *[MAKA1K]*
PENAK TWO KILO (PENAK 2K) *[PENA2K]*
TAGAN TWO KILO (TAGAN 2K) *[TAGA2K]*
RWY 08 DEPARTURES

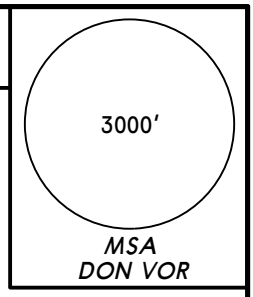

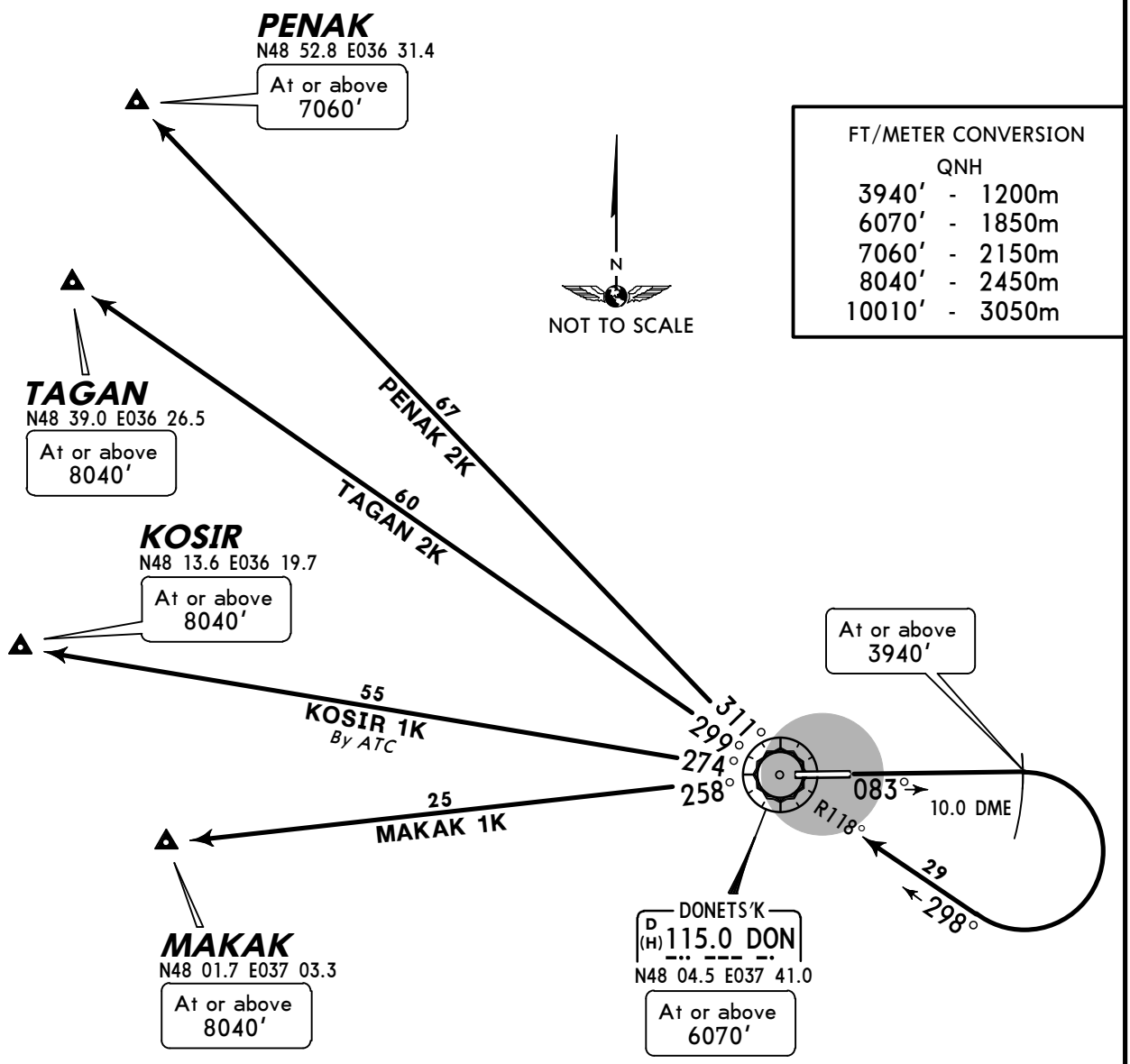

FT/METER CONVERSION QNH		
3940′	-	1200m
6070′	-	1850m
7060′	-	2150m
8040′	-	2450m
10010′	-	3050m

These SIDs require a minimum climb gradient of
7% up to 3940′.

Gnd speed-KT	75	100	150	200	250	300
7% V/V (fpm)	532	709	1063	1418	1772	2127

If unable to comply advise ATC.

SID	ROUTING
KOSIR 1K *By ATC*	Climb on 083° track to at or above 3940′ at DON 10.0 DME, turn RIGHT, intercept DON R-118 inbound to DON, turn LEFT, DON R-274 to KOSIR.
MAKAK 1K	Climb on 083° track to at or above 3940′ at DON 10.0 DME, turn RIGHT, intercept DON R-118 inbound to DON, turn LEFT, DON R-258 to MAKAK.
PENAK 2K	Climb on 083° track to at or above 3940′ at DON 10.0 DME, turn RIGHT, intercept DON R-118 inbound to DON, turn RIGHT, DON R-311 to PENAK.
TAGAN 2K	Climb on 083° track to at or above 3940′ at DON 10.0 DME, turn RIGHT, intercept DON R-118 inbound to DON, turn RIGHT, DON R-299 to TAGAN.

CHANGES: Crossing altitude at TAGAN revised.

© JEPPESEN, 2011, 2012. ALL RIGHTS RESERVED.

Apt Elev 783′	Trans level: By ATC Trans alt: 10010′

KOSIR ONE MIKE (KOSIR 1M) *[KOSI1M]*
MAKAK ONE MIKE (MAKAK 1M) *[MAKA1M]*
PENAK TWO MIKE (PENAK 2M) *[PENA2M]*
TAGAN TWO MIKE (TAGAN 2M) *[TAGA2M]*
RWY 26 DEPARTURES

3000′
MSA DON VOR

FT/METER CONVERSION
QNH

3940′	-	1200m
7060′	-	2150m
8040′	-	2450m
10010′	-	3050m

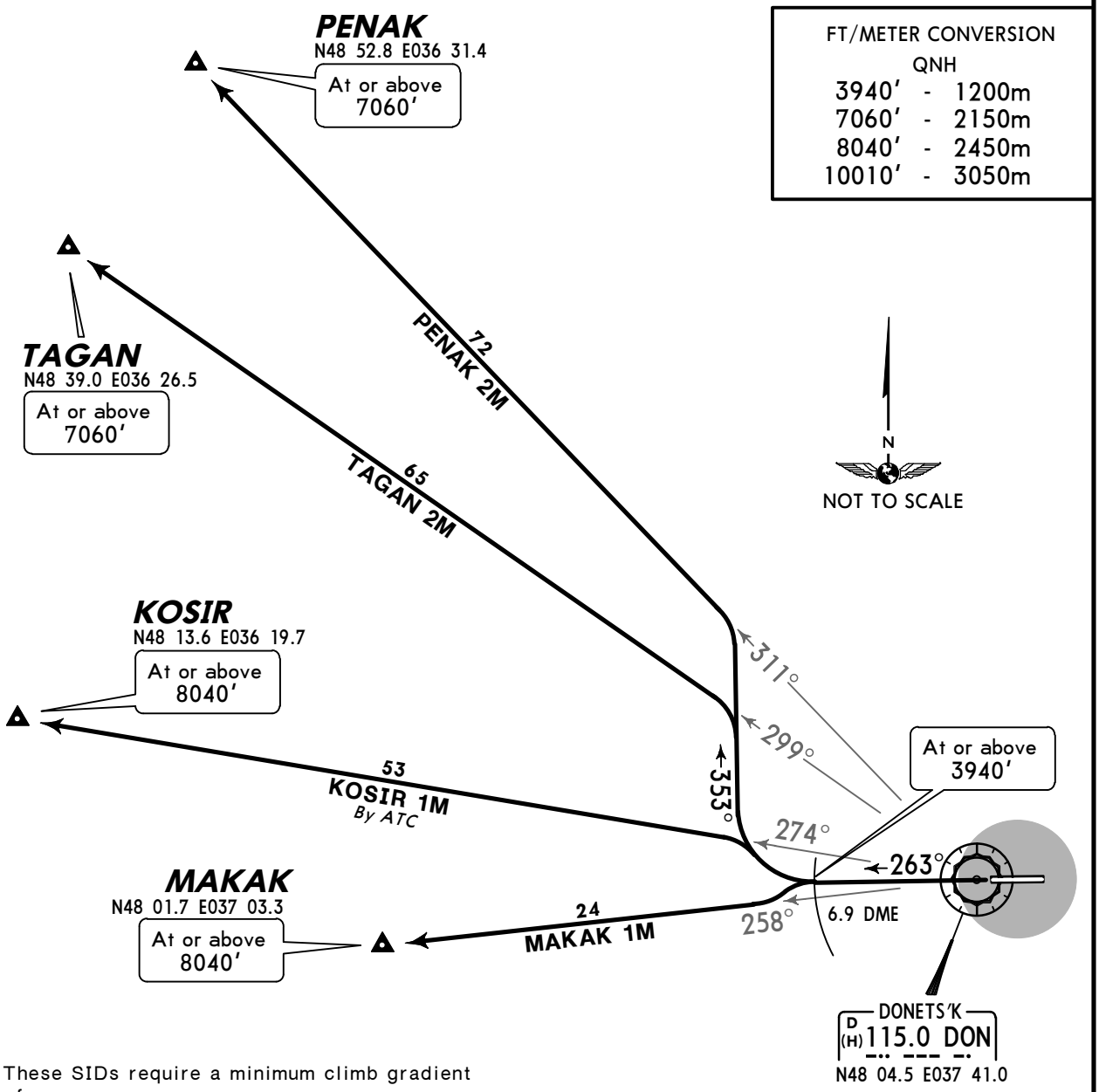

These SIDs require a minimum climb gradient of
7% up to 3940′.

Gnd speed-KT	75	100	150	200	250	300
7% V/V (fpm)	532	709	1063	1418	1772	2127

If unable to comply advise ATC.

SID	ROUTING
KOSIR 1M *By ATC*	Climb on 263° track to at or above 3940′ at DON 6.9 DME, turn RIGHT, intercept DON R-274 to KOSIR.
MAKAK 1M	Climb on 263° track to at or above 3940′ at DON 6.9 DME, turn LEFT, intercept DON R-258 to MAKAK.
PENAK 2M	Climb on 263° track to at or above 3940′ at DON 6.9 DME, turn RIGHT, 353° track, intercept DON R-311 to PENAK.
TAGAN 2M	Climb on 263° track to at or above 3940′ at DON 6.9 DME, turn RIGHT, 353° track, intercept DON R-299 to TAGAN.

CHANGES: None.

© JEPPESEN, 2011, 2012. ALL RIGHTS RESERVED.

NOISE ABATEMENT

GENERAL

Strict adherence to established schemes of SID/STARs.

DEPARTURES

While taking-off from RWY 08 and departing SOUTH the crosswind leg turn executed on height at or above 3940'.

TAKE-OFF RESTRICTIONS RWY 08/26:

Take-off to 1590'	- maintain take-off power of all engines, - take-off flaps, - V_2 + 10 KT.
Between 1590' - 3790'	- correct and maintain engine's capacity according to schedule power control in order to noise abatement, which is given in Flight Operation Manual. Maintain rate of climb V_2 + (10+20 KT) and take-off flaps and slats position.
At 3790'	- Maintain a positive rate of climb, perform acceleration and retract flaps and slats according to schedule and at make acceleration to rate of climb to enroute flight.

© JEPPESEN, 2012. ALL RIGHTS RESERVED.

ATIS	DONETS'K Ground	Tower
130.9 (Russian 121.3)	119.0	118.3

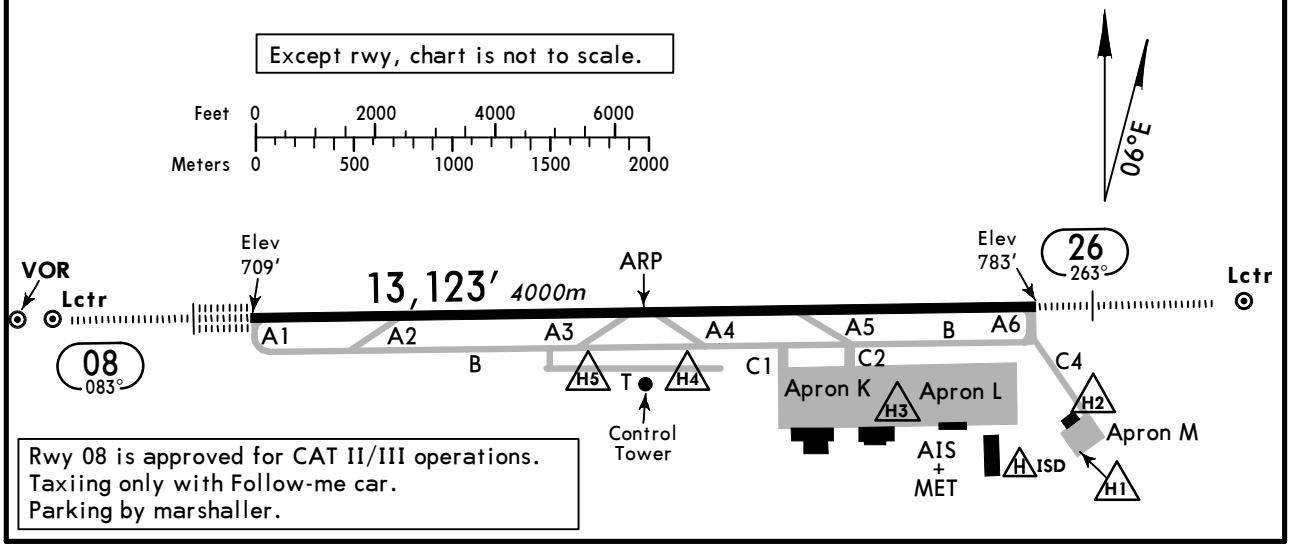

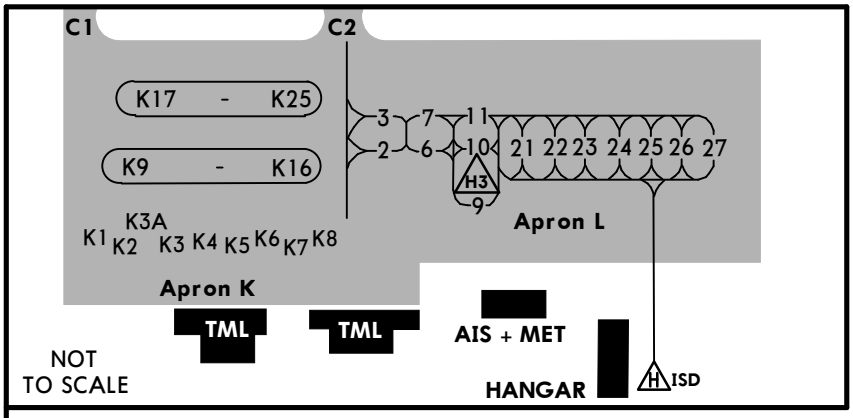

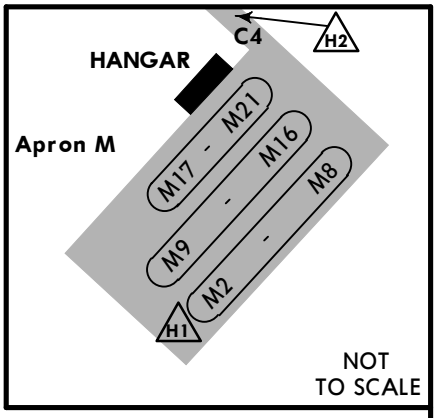

ADDITIONAL RUNWAY INFORMATION

RWY		USABLE LENGTHS LANDING BEYOND Threshold	Glide Slope	TAKE-OFF	WIDTH
08	HIRL *(60m)* CL *(15m)* HIALS-II TDZ ❶ RVR		12,151′ *3704m*	❷	197′ *60m*
26	HIRL *(60m)* CL *(15m)* HIALS ❶ RVR		12,029′ *3666m*		

❶ PAPI-L (3.0°)

❷ TAKE-OFF RUN AVAILABLE

RWY 08:

From rwy head	13,123′ (4000m)
twy A2 int	9843′ (3000m)
twy A3 int	6562′ (2000m)

RWY 26:

From rwy head	13,123′ (4000m)
twy A5 int	9843′ (3000m)
twy A4 int	6562′ (2000m)

LOW VISIBILITY PROCEDURE (LVP)

LVP shall be applied when TDZ, MID or END RVR is less than 600m and/or cloud base is below 98′/30m.
Pilots will be informed by ATC about beginning of LVP.
- After landing pilots should report 'RWY vacated'.
- Taxiing and parking is performed with follow-me car.
- Taxiing on TWY and apron is permitted only for one aircraft at a time.

JAR-OPS

TAKE-OFF ❶

	All Rwys LVP must be in force			
	RL, CL & mult. RVR req	RL & CL	RCLM (DAY only) or RL	NIL (DAY only)
A	*150m*	*200m*	*250m*	*500m*
B				
C				
D	*200m*	*250m*	*300m*	

❶ Operators applying U.S. Ops Specs: CL required below 300m.

CHANGES: Stands.

© JEPPESEN, 1998, 2013. ALL RIGHTS RESERVED.

STRAIGHT-IN RWY		A	B	C	D
08	CAT 3A ILS	**RA50′ R200m**	**RA50′ R200m**	**RA50′ R200m**	**RA50′ R200m**
	CAT 2 ILS	**809′**(100′) **RA107′R300m**	**809′**(100′) **RA107′R300m**	**809′**(100′) **RA107′R300m**	**809′**(100′) **RA107′R300m**
	ILS *FULL* *Limited* *ALS out*	**909′**(200′) **R550m** R750m R1200m	**909′**(200′) **R550m** R750m R1200m	**909′**(200′) **R550m** R750m R1200m	**909′**(200′) **R550m** R750m R1200m
	LOC	NOT AUTH	NOT AUTH	NOT AUTH	NOT AUTH
	VOR ❶ *ALS out*	**1170′**(461′) **R1500m** R1500m	**1170′**(461′) **R1500m** R1500m	**1170′**(461′) **R1500m** C2200m	**1170′**(461′) **R1500m** C2200m
	NDB ❶❷ *ALS out*	**1170′**(461′) **R1500m** R1500m	**1170′**(461′) **R1500m** R1500m	**1170′**(461′) **R1500m** C2200m	**1170′**(461′) **R1500m** C2200m
	NDB ❸ *ALS out*	**1220′**(511′) **R1800m** C2600m	**1220′**(511′) **R1800m** C2600m	**1220′**(511′) **R2000m** C2800m	**1220′**(511′) **R2000m** C2800m
26	ILS *FULL* *Limited* *ALS out*	**983′**(200′) **R550m** R750m R1200m	**983′**(200′) **R550m** R750m R1200m	**983′**(200′) **R550m** R750m R1200m	**983′**(200′) **R550m** R750m R1200m
	LOC	NOT AUTH	NOT AUTH	NOT AUTH	NOT AUTH
	VOR ❶❹ *ALS out*	**1220′**(437′) **R1300m** R1500m	**1220′**(437′) **R1300m** R1500m	**1220′**(437′) **R1300m** R2000m	**1220′**(437′) **R1300m** R2000m
	VOR ❶❺ *ALS out*	**1420′**(637′) **R1500m** R1500m	**1420′**(637′) **R1500m** R1500m	**1420′**(637′) **C2200m** C2400m	**1420′**(637′) **C2200m** C2400m
	2 NDB ❶ *ALS out*	**1220′**(437′) **R1300m** R1500m	**1220′**(437′) **R1300m** R1500m	**1220′**(437′) **R1300m** R2000m	**1220′**(437′) **R1300m** R2000m
	O NDB ❶❷ *ALS out*	**1420′**(637′) **R1500m** R1500m	**1420′**(637′) **R1500m** R1500m	**1420′**(637′) **C2200m** C2400m	**1420′**(637′) **C2200m** C2400m
	O NDB ❸ *ALS out*	**1480′**(697′) **C2700m** C3400m	**1480′**(697′) **C2700m** C3400m	**1480′**(697′) **C2900m** C3600m	**1480′**(697′) **C2900m** C3600m

❶ Continuous Descent Final Approach.
❷ with DME.
❸ w/o DME.
❹ with D5.0.
❺ w/o D5.0

© JEPPESEN, 2010, 2012. ALL RIGHTS RESERVED.

CIRCLE-TO-LAND ❶	100 KT	135 KT	180 KT	205 KT
After apch to rwy 08 ❷	**1280**′(571′)	**1420**′(711′)	**1510**′(801′)	**1690**′(981′)
After ILS 26	**1280**′(497′)	**1420**′(637′)	**1510**′(727′)	**1690**′(907′)
After VOR 26	**1420**′(637′)	**1420**′(637′)	**1510**′(727′)	**1690**′(907′)
After NDB 26	**1480**′(697′)	**1480**′(697′)	**1510**′(727′)	**1690**′(907′)
	V1500m	V1600m	V2400m	V3600m

❶Not authorized South of airport btn R-110 & R-230 DON.
❷Circling height based on rwy 08 thresh elev of 709′.

TAKE-OFF RWY 08, 26

LVP must be in Force

	RL, CL & mult. RVR req	RL & CL	RCLM (DAY only) or RL	NIL (DAY only)
A, B, C	150m	200m	250m	500m
D	200m	250m	300m	

© JEPPESEN, 2010, 2012. ALL RIGHTS RESERVED.

BRIEFING STRIP

ATIS	DONETS'K Approach Radar (APP)	DONETS'K Tower	Ground
130.9 (Russian 121.3)	134.0	118.3	119.0

LOC IDN	Final Apch Crs	GS LOM	ILS DA(H)	Apt Elev / RWY
109.3	083°	1444' (735')	909' (200')	783' / 709'

MISSED APCH: ❶ Climb on track 083° to 2960', then as directed.
WITH COMM FAILURE: ❷ Climb on track 083° to 3940', then turn LEFT to DN NDB, then according to chart.

Alt Set: hPa (MM on req) Rwy Elev: 27 hPa Trans level: by ATC Trans alt: 10010'

3000'
MSA DON VOR

FT/METER CONVERSION
QNH
10010' - 3050m
3940' - 1200m
2960' - 900m

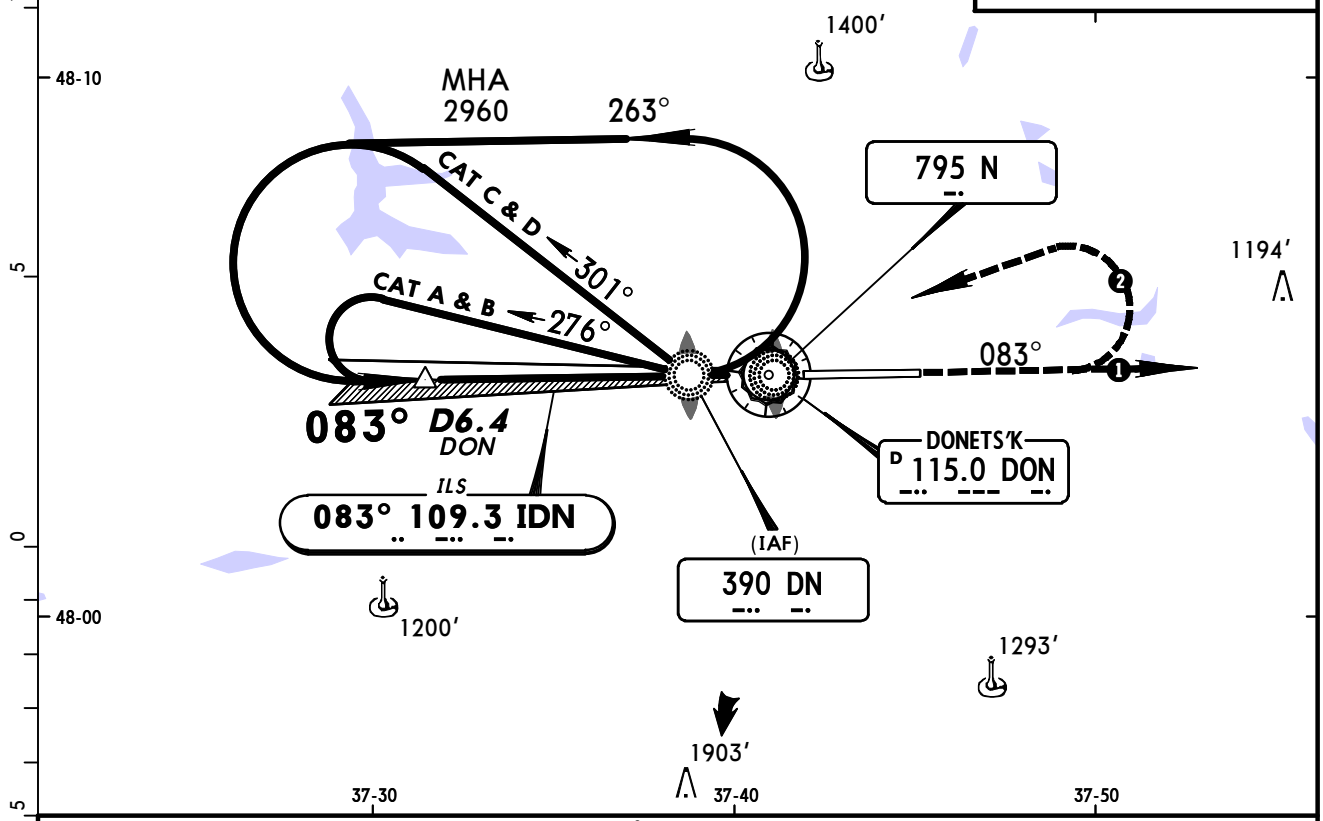

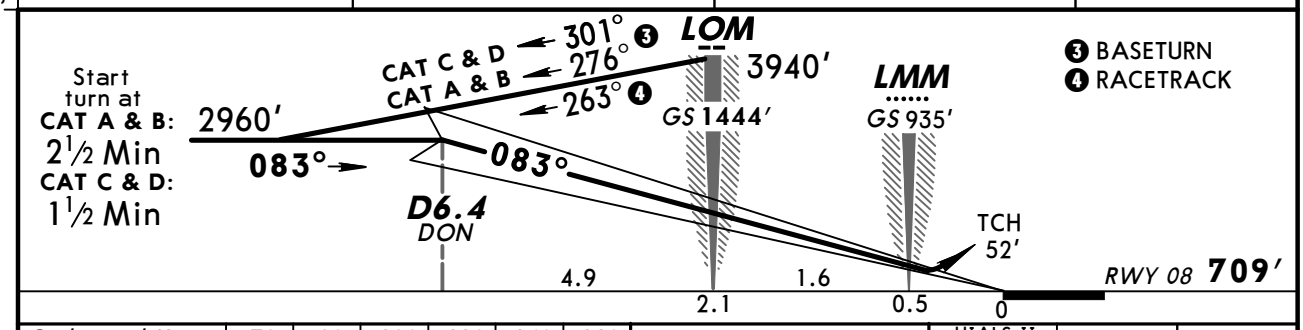

Gnd speed-Kts	70	90	100	120	140	160
ILS GS 3.00°	372	478	531	637	743	849

HIALS-II
PAPI
2960' on 083°

PANS OPS

JAR-OPS STRAIGHT-IN LANDING RWY 08

	ILS DA(H) 909' (200') FULL	ILS DA(H) 909' (200') ALS out	LOC (GS out)
A	RVR 550m	RVR 1000m	NOT AUTHORIZED
B			
C			
D			

CIRCLE-TO-LAND ❶
Not authorized South of airport btn R-110 DON & R-230 DON clockwise

Max Kts	MDA(H)	VIS
100	1280' (571')	1500m
135	1420' (711')	1600m
180	1510' (801')	2400m
205	1690' (981')	3600m

❶ Circling height based on rwy 08 thresh elevation of 709'.

CHANGES: Communications.

© JEPPESEN, 1999, 2012. ALL RIGHTS RESERVED.

ATIS	DONETS'K Approach Radar (APP)	DONETS'K Tower	Ground
130.9 (Russian 121.3)	134.0	118.3	119.0

BRIEFING STRIP ™

LOC IDN	Final Apch Crs	GS LOM	CAT II ILS RA 107′ DA(H) 809′(100′)	Apt Elev 783′ RWY 709′
109.3	083°	1444′ (735′)		

MISSED APCH: ❶ Climb on track 083° to 2960′, then as directed.
WITH COMM FAILURE: ❷ Climb on track 083° to 3940′, then turn LEFT to DN NDB, then according to chart.

Alt Set: hPa (MM on req) Rwy Elev: 27 hPa Trans level: by ATC Trans alt: 10010′
Special Aircrew and Aircraft Certification Required.

3000′
MSA DON VOR

FT/METER CONVERSION
QNH
10010′ - 3050m
3940′ - 1200m
2960′ - 900m

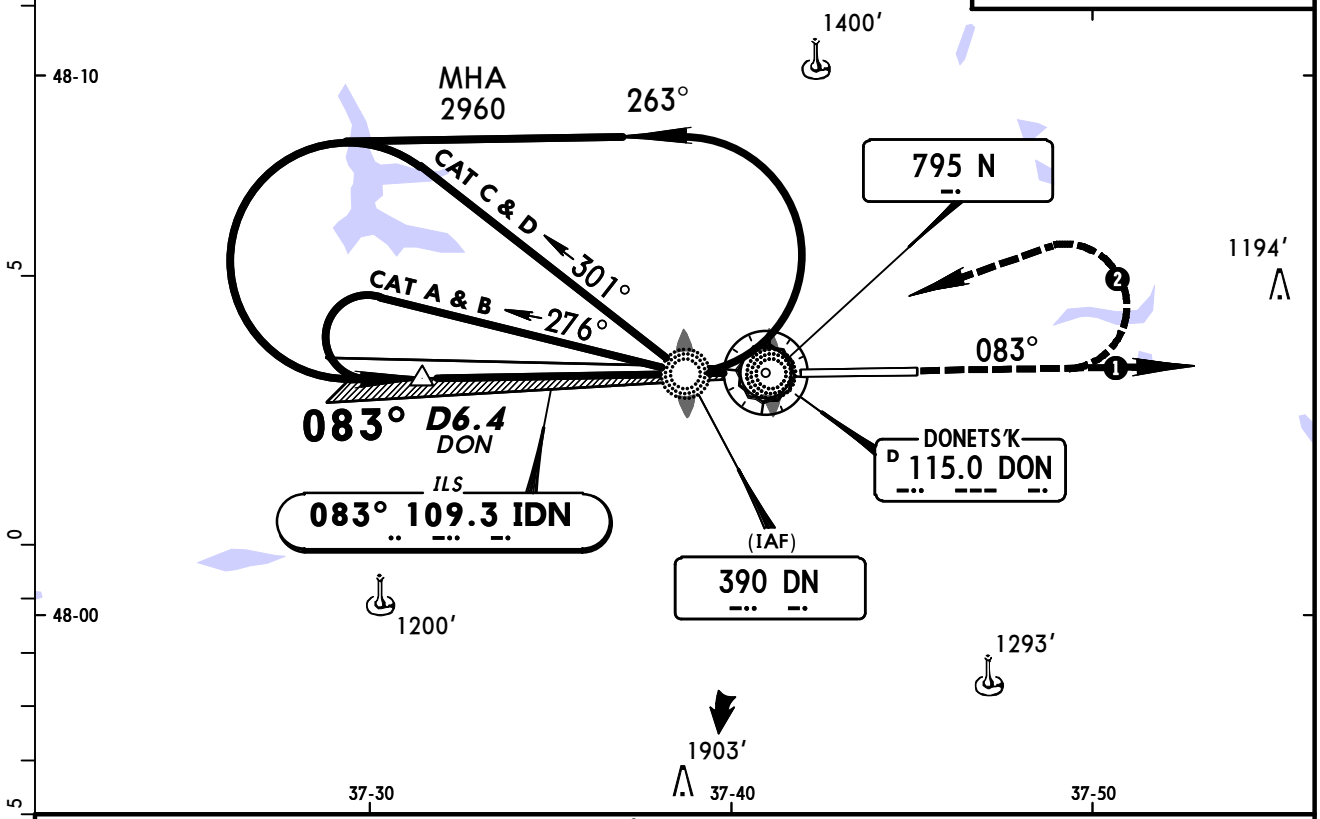

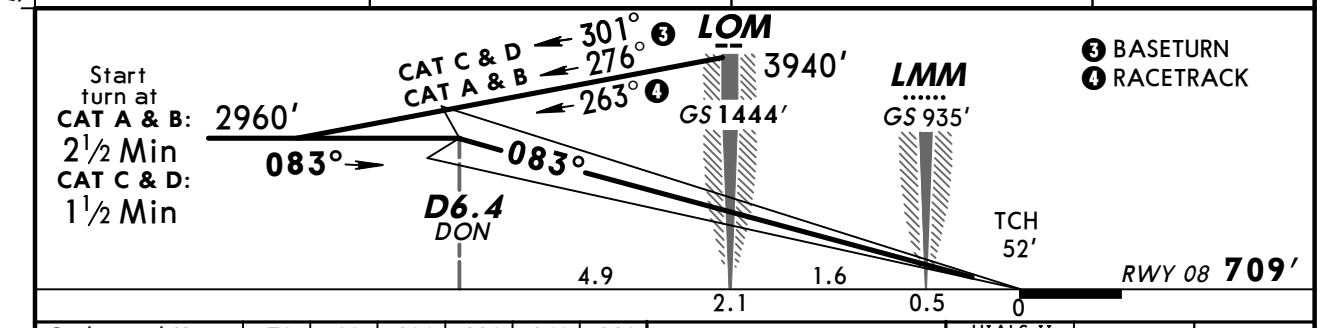

Gnd speed-Kts	70	90	100	120	140	160
GS 3.00°	372	478	531	637	743	849

HIALS-II
PAPI
2960′ on 083°

JAR-OPS

STRAIGHT-IN LANDING RWY **08**
CAT II ILS

ABCD
RA 107′
DA(H) **809′**(100′)

PANS OPS

RVR 300m ❶

❶ Operators applying U.S. Ops Specs: Autoland or HUD required below 350m.

CHANGES: Communications.

© JEPPESEN, 2012. ALL RIGHTS RESERVED.

BRIEFING STRIP ™

ATIS	DONETS'K Approach Radar (APP)	DONETS'K Tower	Ground
130.9 (Russian 121.3)	134.0	118.3	119.0

LOC IDO	Final Apch Crs	GS LOM	ILS DA(H)	Apt Elev / RWY
111.7	263°	1542′ (751′)	983′ (200′)	783′ / 783′

MISSED APCH: ❶ Climb on track 263° to 2960′, then as directed.
WITH COMM FAILURE: ❷ Climb on track 263° to 3940′, then turn RIGHT to DO NDB, then according to chart.

Alt Set: hPa (MM on req) Rwy Elev: 29 hPa Trans level: by ATC Trans alt: 10010′

3000′
MSA DON VOR

FT/METER CONVERSION
QNH

10010′	-	3050m
3940′	-	1200m
2960′	-	900m

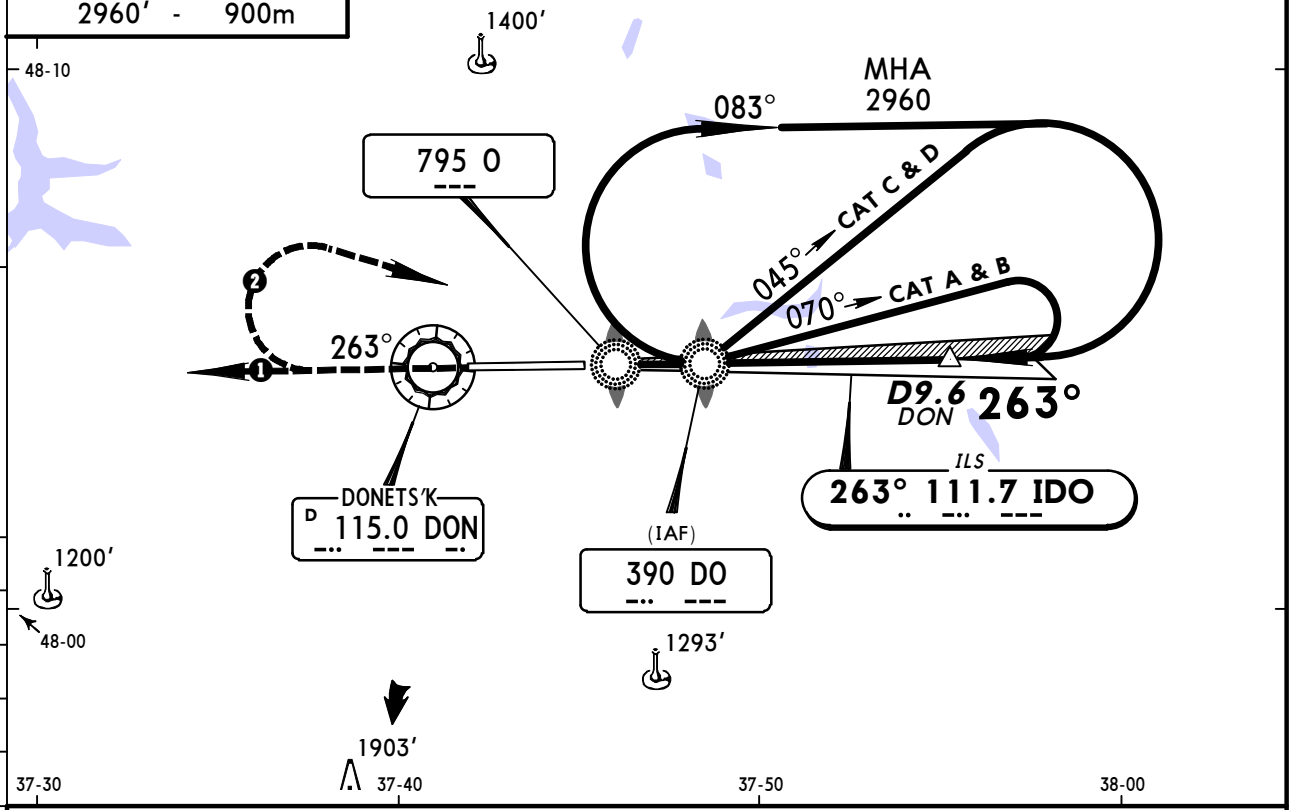

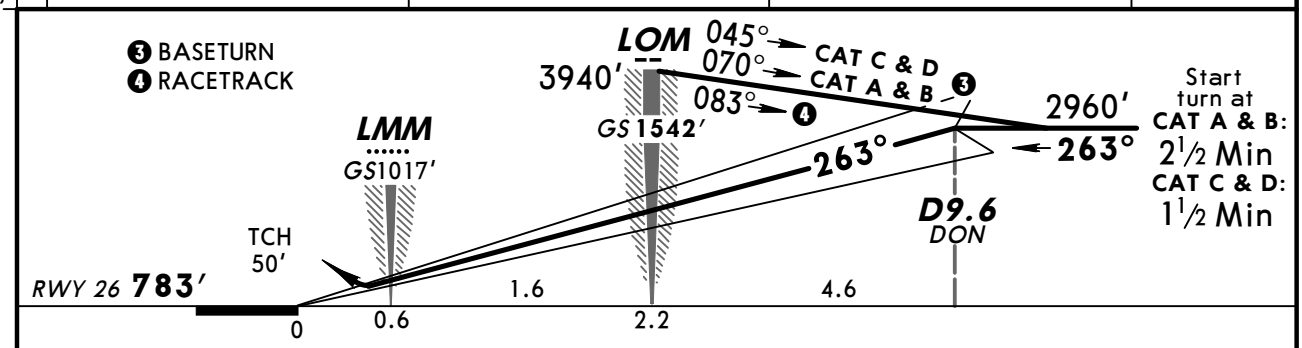

Gnd speed-Kts	70	90	100	120	140	160
ILS GS 3.00°	372	478	531	637	743	849

HIALS
PAPI
2960′ on 263°

JAR-OPS STRAIGHT-IN LANDING RWY **26**

	ILS DA(H) 983′ (200′) FULL	ILS DA(H) 983′ (200′) ALS out	LOC (GS out)
A	RVR 550m	RVR 1000m	NOT AUTHORIZED
B			
C			
D			

CIRCLE-TO-LAND
Not authorized South of airport btn R-110 DON & R-230 DON clockwise

Max Kts	MDA(H)	VIS
100	1280′ (497′)	1500m
135	1420′ (637′)	1600m
180	1510′ (727′)	2400m
205	1690′ (907′)	3600m

PANS OPS

CHANGES: Communications.

© JEPPESEN, 1999, 2012. ALL RIGHTS RESERVED.

BRIEFING STRIP

ATIS	DONETS'K Approach Radar (APP)	DONETS'K Tower	Ground
130.9 (Russian 121.3)	134.0	118.3	119.0

VOR	Final Apch Crs	Minimum Alt	MDA(H)	Apt Elev / RWY
DON 115.0	083°	D6.4 2960′ (2251′)	1170′ (461′)	Apt Elev 783′ RWY 709′

MISSED APCH: ❶ Climb on track 083° to 2960′, then as directed.
WITH COMM FAILURE: ❷ Climb on track 083° to 3940′, then turn LEFT to DN NDB, then according to chart.

Alt Set: hPa (MM on req) Rwy Elev: 27 hPa Trans level: by ATC Trans alt: 10010′

3000′
MSA DON VOR

FT/METER CONVERSION
QNH
10010′ - 3050m
3940′ - 1200m
2960′ - 900m

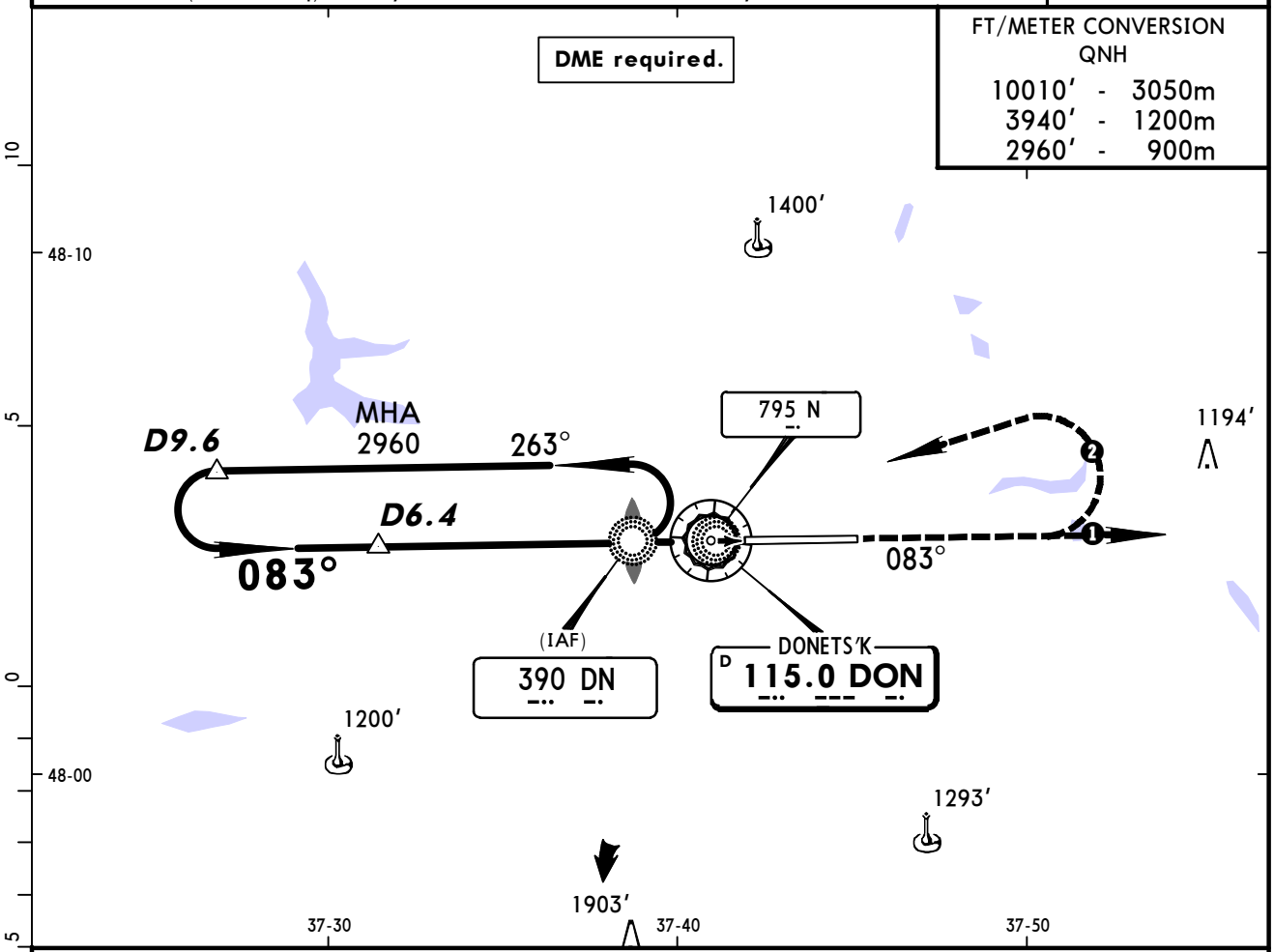

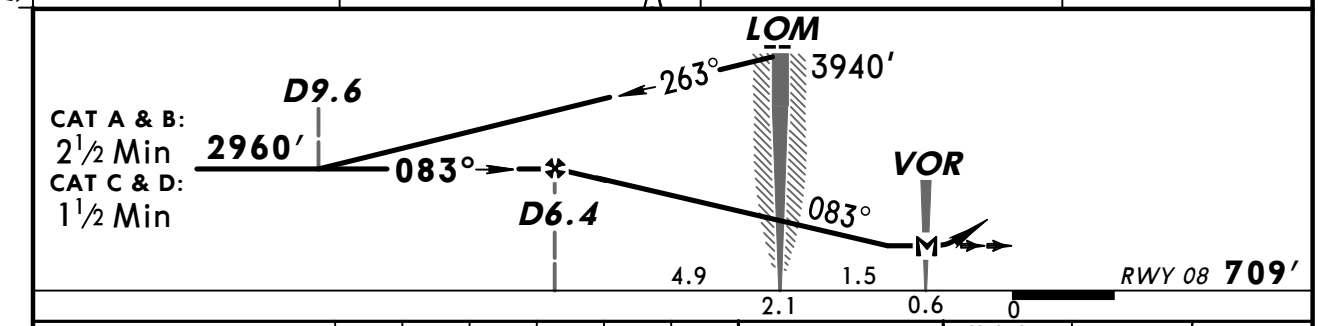

Gnd speed-Kts		70	90	100	120	140	160
Descent Angle	3.00°	372	478	531	637	743	849
MAP at VOR							

HIALS-II
PAPI
2960′ on 083°

PANS OPS

JAR-OPS STRAIGHT-IN LANDING RWY **08**

MDA(H) **1170′** (461′)

		ALS out
A	RVR 1000m	RVR 1500m
B	RVR 1200m	
C		RVR 2000m
D	RVR 1600m	

CIRCLE-TO-LAND ❶

Not authorized South of airport between R-110 & R-230 clockwise

Max Kts	MDA(H)	VIS
100	1280′ (571′)	1500m
135	1420′ (711′)	1600m
180	1510′ (801′)	2400m
205	1690′ (981′)	3600m

❶ Circling height based on rwy 08 thresh elevation of 709′.

CHANGES: Communications.

© JEPPESEN, 2008, 2012. ALL RIGHTS RESERVED.

BRIEFING STRIP

ATIS	DONETS'K Approach Radar (APP)	DONETS'K Tower	Ground
130.9 (Russian 121.3)	134.0	118.3	119.0

VOR	Final Apch Crs	Minimum Alt	MDA(H)	Apt Elev 783'
DON 115.0	263°	D9.6 2960' (2177')	(CONDITIONAL) 1220' (437')	RWY 783'

MISSED APCH: ❶ Climb on track 263° to 2960', then as directed.
WITH COMM FAILURE: ❷ Climb on track 263° to 3940', then turn RIGHT to DO NDB, then according to chart.

Alt Set: hPa (MM on req) Rwy Elev: 29 hPa Trans level: by ATC Trans alt: 10010'

3000'
MSA DON VOR

FT/METER CONVERSION
QNH

10010'	-	3050m
3940'	-	1200m
2960'	-	900m
1550'	-	470m

DME required.

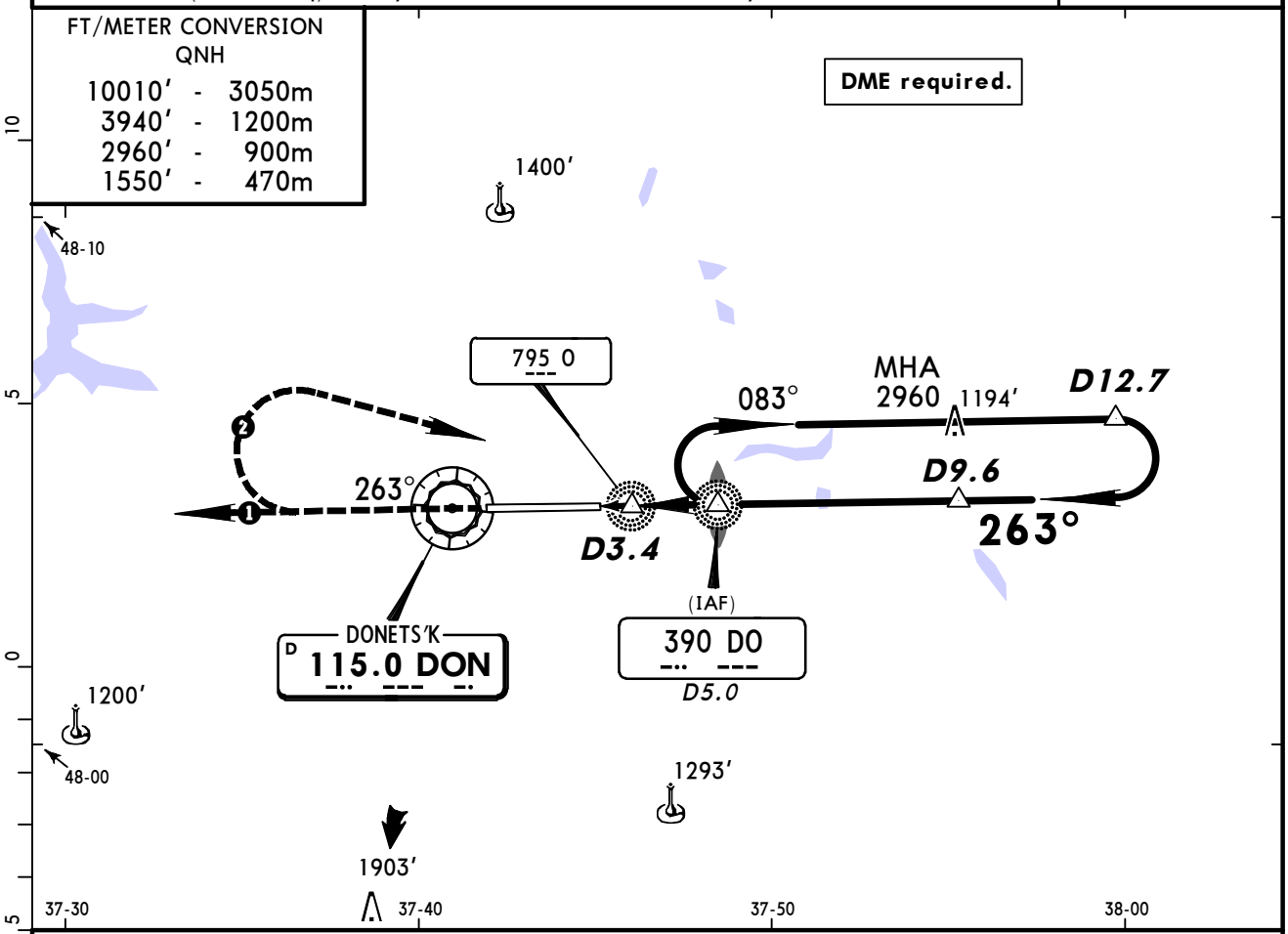

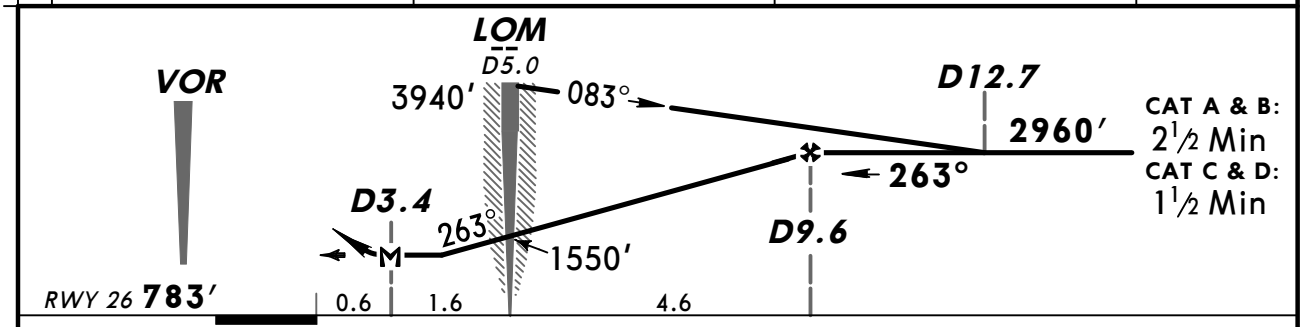

CAT A & B: 2½ Min
CAT C & D: 1½ Min

Gnd speed-Kts		70	90	100	120	140	160
Descent Angle	3.00°	372	478	531	637	743	849
MAP at D3.4							

HIALS
PAPI

2960' on 263°

PANS OPS

JAR-OPS STRAIGHT-IN LANDING RWY 26

	With D5.0 MDA(H) 1220' (437')		W/o D5.0 MDA(H) 1420' (637')	
		ALS out		ALS out
A	RVR 900m	RVR 1500m	RVR 1000m	RVR 1500m
B	RVR 1000m		RVR 1200m	
C		RVR 1800m		RVR 2000m
D	RVR 1400m	RVR 2000m	RVR 1600m	

CIRCLE-TO-LAND
Not authorized South of airport between R-110 & R-230 clockwise

Max Kts	MDA(H)	VIS
100	1420' (637')	1500m
135	1420' (637')	1600m
180	1510' (727')	2400m
205	1690' (907')	3600m

CHANGES: Communications.

© JEPPESEN, 2008, 2012. ALL RIGHTS RESERVED.

BRIEFING STRIP

ATIS	DONETS'K Approach Radar (APP)	DONETS'K Tower	Ground
130.9 (Russian 121.3)	134.0	118.3	119.0

NDB	Final Apch Crs	Minimum Alt	MDA(H)	Apt Elev 783'
DN 390	083°	D6.4 2960' (2251')	(CONDITIONAL) 1170' (461')	RWY 709'

MISSED APCH: ❶ Climb on track 083° to 2960', then as directed.
WITH COMM FAILURE: ❷ Climb on track 083° to 3940', then turn LEFT to DN NDB, then according to chart.

Alt Set: hPa (MM on req) Rwy Elev: 27 hPa Trans level: by ATC Trans alt: 10010'

3000'
MSA DON VOR

FT/METER CONVERSION
QNH
10010' - 3050m
3940' - 1200m
2960' - 900m

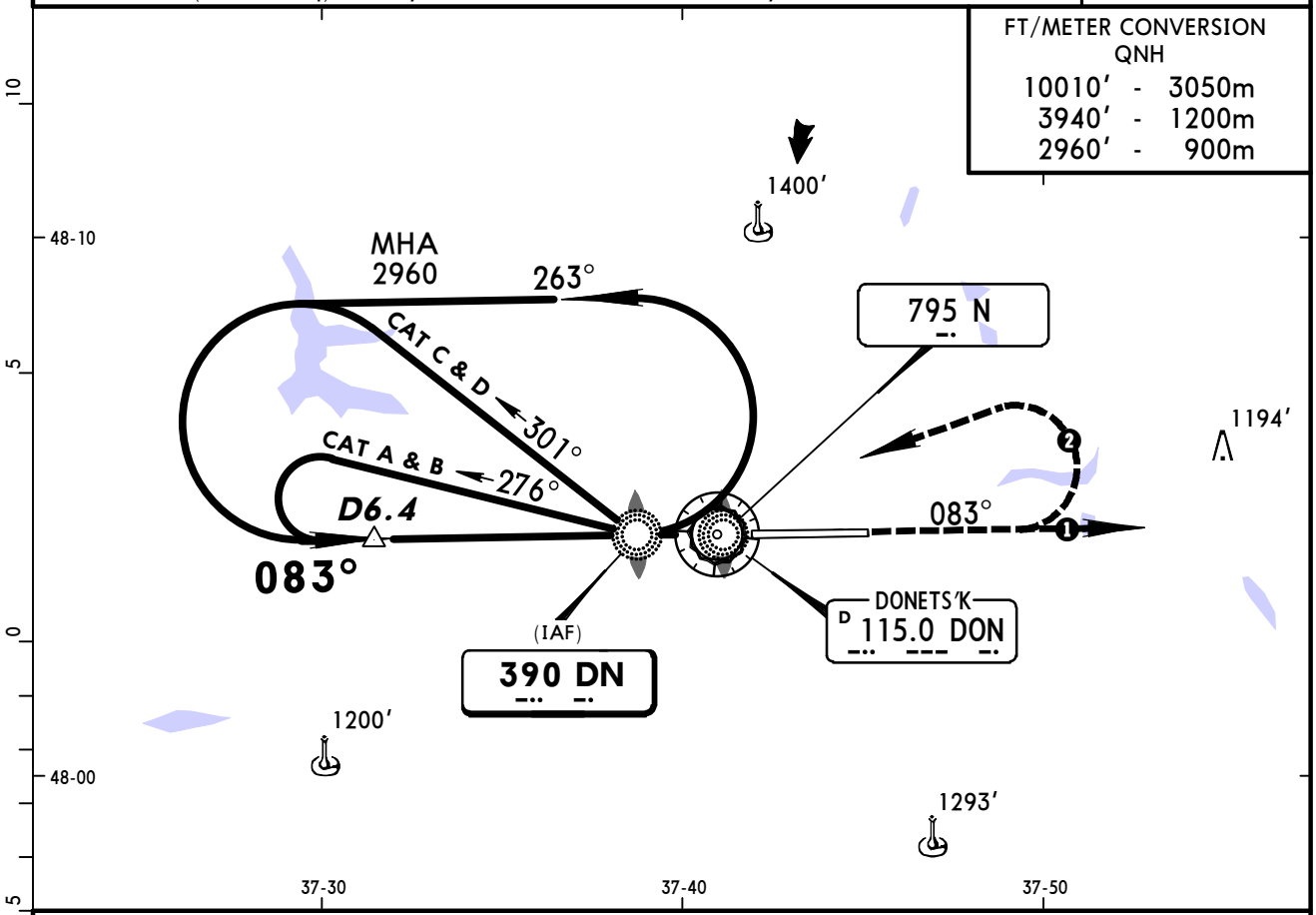

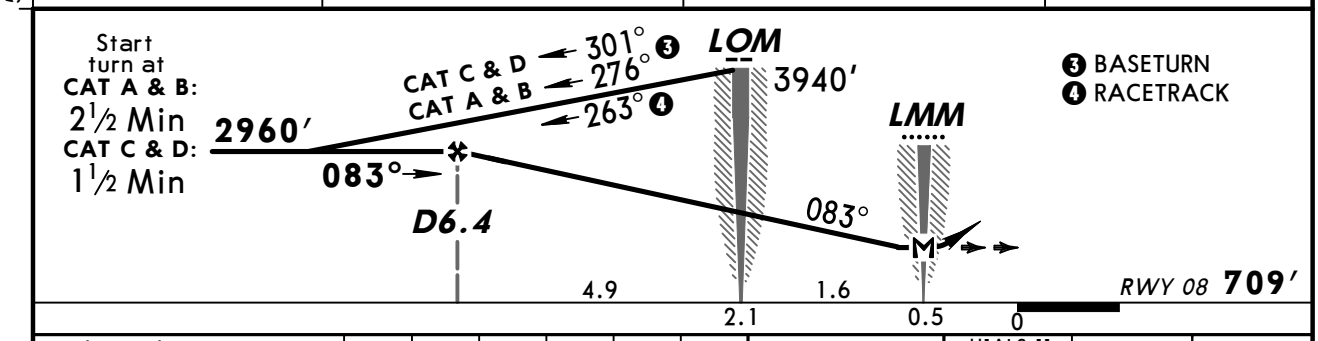

Gnd speed-Kts		70	90	100	120	140	160
Descent Angle	3.00°	372	478	531	637	743	649
MAP at LMM							

HIALS-II
PAPI
2960' on 083°

JAR-OPS STRAIGHT-IN LANDING RWY 08

	With DME MDA(H) 1170'(461')		W/o DME MDA(H) 1220'(511')	
		ALS out		ALS out
A	RVR 1000m	RVR 1500m	RVR 1000m	RVR 1500m
B	RVR 1200m		RVR 1200m	
C		RVR 2000m		RVR 2000m
D	RVR 1600m		RVR 1600m	

CIRCLE-TO-LAND ❶

Not authorized South of airport between R-110 & R-230 clockwise

Max Kts	MDA(H)	VIS
100	1280'(571')	1500m
135	1420'(711')	1600m
180	1510'(801')	2400m
205	1690'(981')	3600m

PANS OPS

❶ Circling height based on rwy 08 thresh elevation of 709'.

CHANGES: Communications.

© JEPPESEN, 2004, 2012. ALL RIGHTS RESERVED.

BRIEFING STRIP

ATIS	DONETS'K Approach Radar (APP)	DONETS'K Tower	Ground
130.9 (Russian 121.3)	134.0	118.3	119.0

NDB DO	Final Apch Crs	Minimum Alt	2 NDB MDA(H)	Apt Elev / RWY
390	263°	D9.6 2960′ (2177′)	1220′ (437′)	Apt Elev 783′ / RWY 783′

MISSED APCH: ❶ Climb on track 263° to 2960′, then as directed.
WITH COMM FAILURE: ❷ Climb on track 263° to 3940′, then turn RIGHT to DO NDB, then according to chart.

Alt Set: hPa (MM on req) Rwy Elev: 29 hPa Trans level: by ATC Trans alt: 10010′

3000′
MSA DON VOR

FT/METER CONVERSION
QNH

10010′	-	3050m
3940′	-	1200m
2960′	-	900m
1550′	-	470m

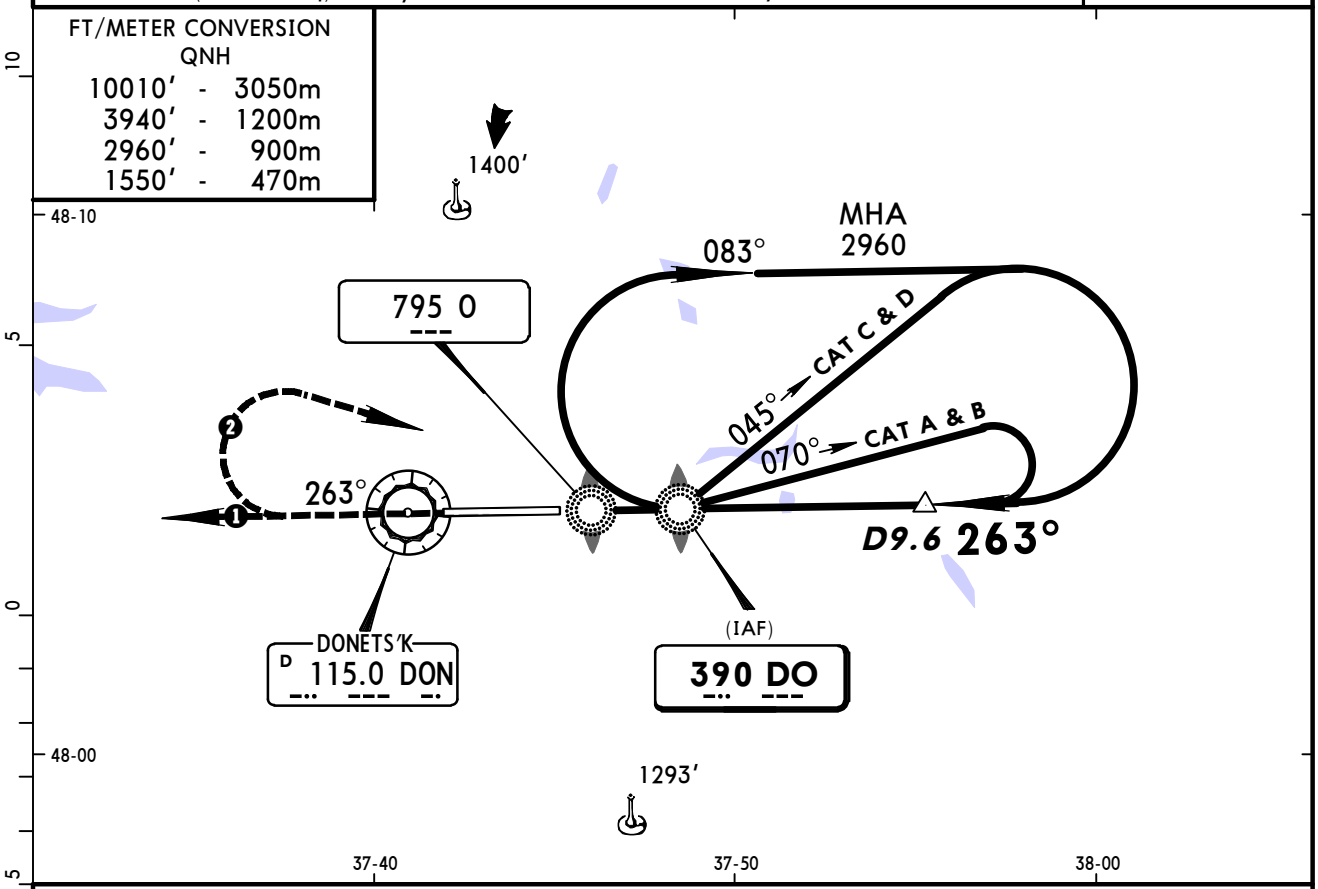

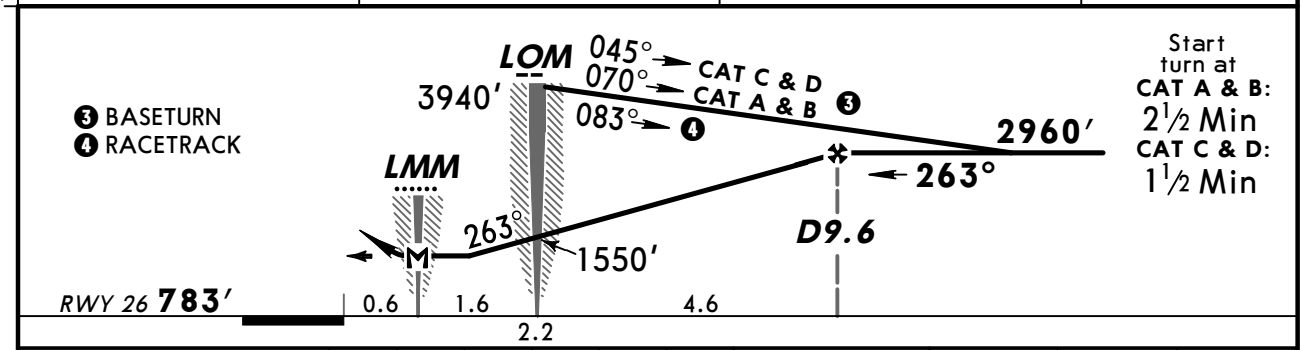

Gnd speed-Kts		70	90	100	120	140	160
Descent Angle	3.00°	372	478	531	637	743	849
MAP at LMM							

HIALS
PAPI
2960′ on 263°

JAR-OPS STRAIGHT-IN LANDING RWY **26**

	2 NDB MDA(H) 1220′(437′)		O Lctr with DME MDA(H) 1420′(637′)		O Lctr w/o DME MDA(H) 1480′(697′)	
		ALS out		ALS out		ALS out
A	RVR 900m	RVR 1500m	RVR 1000m	RVR 1500m	RVR 1200m	RVR 1500m
B	RVR 1000m		RVR 1200m		RVR 1400m	
C		RVR 1800m		RVR 2000m		RVR 2000m
D	RVR 1400m	RVR 2000m	RVR 1600m		RVR 1800m	

CIRCLE-TO-LAND

Not authorized South of airport between R-110 & R-210 clockwise

Max Kts	MDA(H)	VIS
100	1480′(697′)	1500m
135	1480′(697′)	1600m
180	1510′(727′)	2400m
205	1690′(907′)	3600m

PANS OPS

CHANGES: Communications.

© JEPPESEN, 2004, 2012. ALL RIGHTS RESERVED.

(c) JEPPESEN SANDERSON, INC., 2014, ALL RIGHTS RESERVED

JEPPESEN
JeppView for Windows

Chart changes since cycle 26-2013

ADD = added chart, REV = revised chart, DEL = deleted chart.

ACT	PROCEDURE IDENT	INDEX	REV DATE	EFF DATE

DONETS'K, (DONETS'K - UKCC)

(c) JEPPESEN SANDERSON, INC., 2014, ALL RIGHTS RESERVED

TERMINAL CHART CHANGE NOTICES

Chart Change Notices for Airport UKCC

Type: Terminal
Effectivity: Temporary
Begin Date: 20131017
End Date: Until Further Notice

(10-1R) Donets'k Approach Radar 134.0 MHz callsign changed to Donets'k Radar.

Type: Terminal
Effectivity: Permanent
Begin Date: 20130919
End Date: No end date

(10-9) Twys A3 & A4 closed.