(c) JEPPESEN SANDERSON, INC., 2013, ALL RIGHTS RESERVED

List of pages in this Trip Kit

Trip Kit Index
Airport Information For UKWW
Terminal Charts For UKWW
Revision Letter For Cycle 08-2013
Change Notices
Notebook

(c) JEPPESEN SANDERSON, INC., 2013, ALL RIGHTS RESERVED

General Information

Location: Vinnytsia Ukr
IATA Code: VIN
Lat/Long: N49° 14.5' E028° 36.8'
Elevation: 974 ft

Airport Use: Public
Magnetic Variation: 6.3°E

Fuel Types: Jet A-1
Customs: Yes
Airport Type: IFR
Landing Fee: No
Control Tower: Yes
Jet Start Unit: No
LLWS Alert: No
Beacon: No

Sunrise: 0315 Z
Sunset: 1657 Z,

Runway Information

Runway: 13
Length x Width: 8202 ft x 138 ft
Surface Type: concrete
TDZ-Elev: 971 ft
Lighting: Edge, ALS

Runway: 31
Length x Width: 8202 ft x 138 ft
Surface Type: concrete
TDZ-Elev: 967 ft
Lighting: Edge, ALS

Communication Information

Vinnytsia Tower 128.0
Basket Start Tower 124.0

Apt Elev	
974′	Alt Set: hPa (MM on request) Trans level: By ATC Trans alt: 10010′

NEMYRIV THREE CHARLIE (NM 3C)
NEMYRIV THREE DELTA (NM 3D)
POGER THREE DELTA (POGER 3D)
POGER THREE ECHO (POGER 3E)
RWYS 13, 31 ARRIVALS
FROM EAST

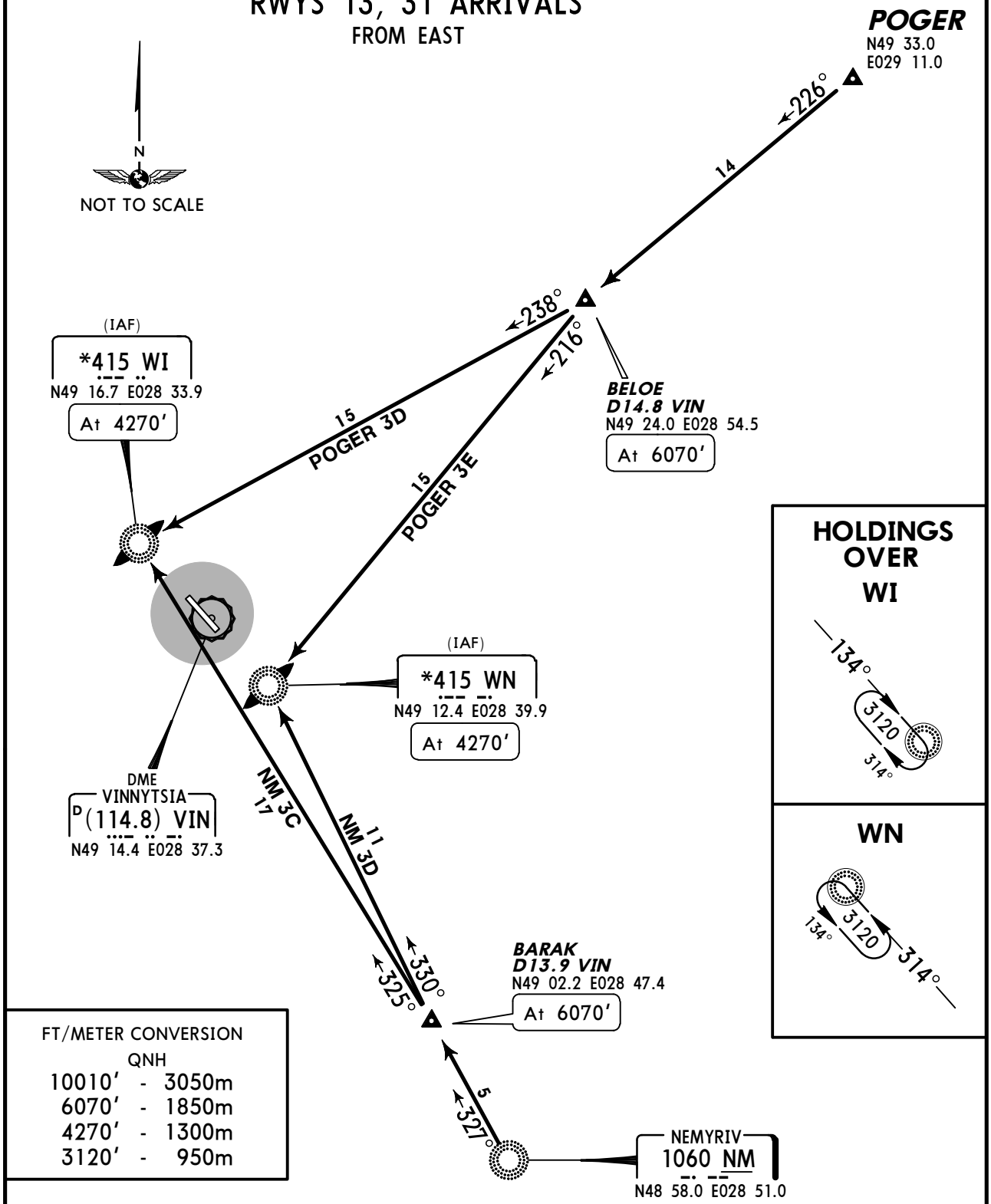

FT/METER CONVERSION
QNH

10010′	-	3050m
6070′	-	1850m
4270′	-	1300m
3120′	-	950m

STAR	RWY	ROUTING
NM 3C	13	On 327° bearing to BARAK, turn LEFT, intercept 325° bearing to WI.
NM 3D	31	On 327° bearing to BARAK, turn RIGHT, intercept 330° bearing to WN.
POGER 3D	13	On 226° track to BELOE, turn RIGHT, intercept 238° bearing to WI.
POGER 3E	31	On 226° track to BELOE, turn LEFT, intercept 216° bearing to WN.

CHANGES: New chart.

© JEPPESEN, 2009. ALL RIGHTS RESERVED.

Apt Elev	
974′	Alt Set: hPa (MM on request) Trans level: By ATC Trans alt: 10010′

KOROP THREE CHARLIE (KOROP 3C)
KOROP ONE HOTEL (KOROP 1H)
TAKET TWO DELTA (TAKET 2D)
TAKET ONE HOTEL (TAKET 1H)
RWYS 13, 31 ARRIVALS
FROM WEST

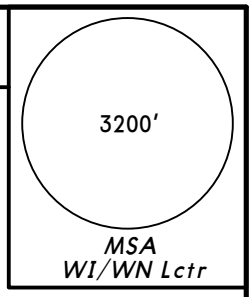

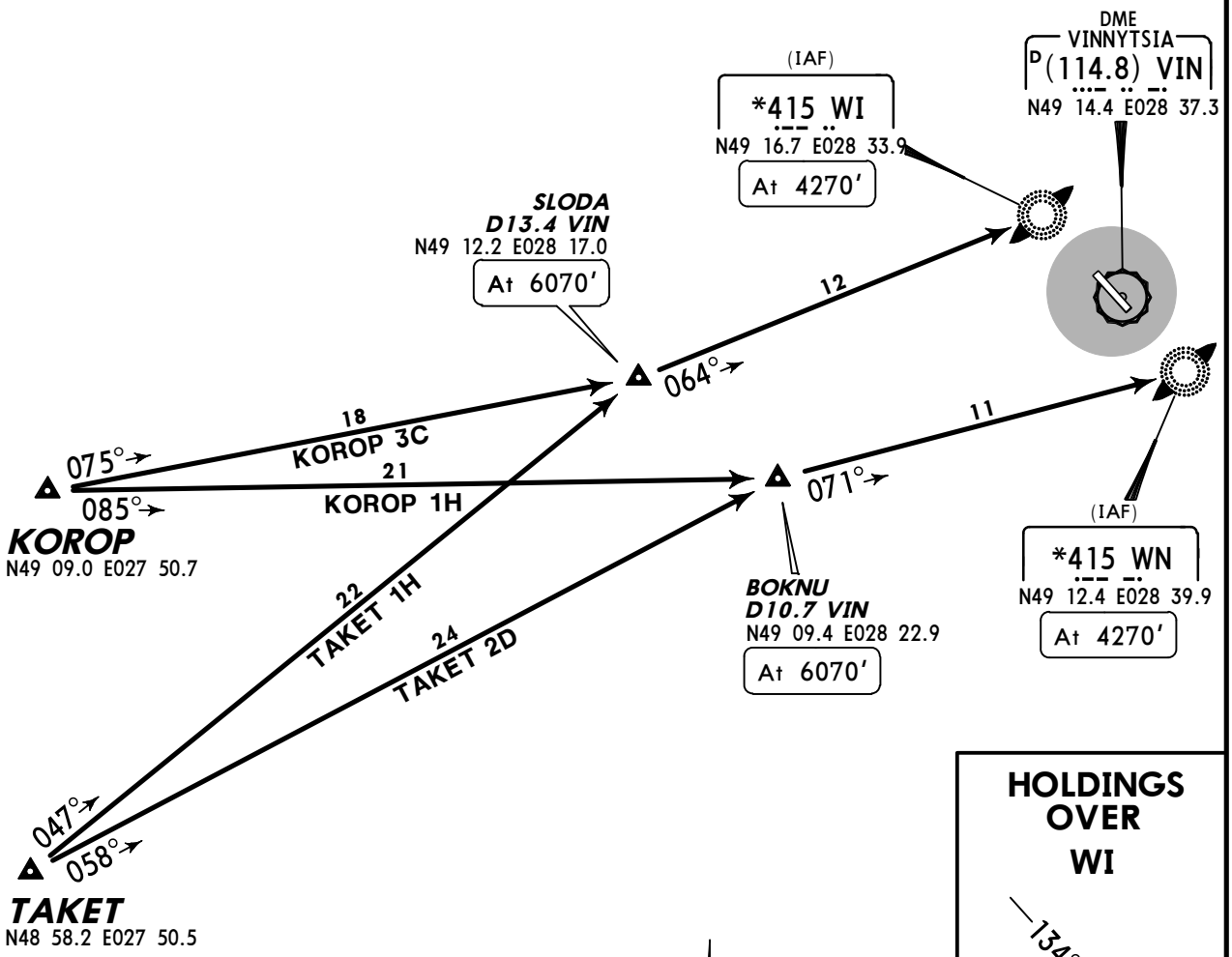

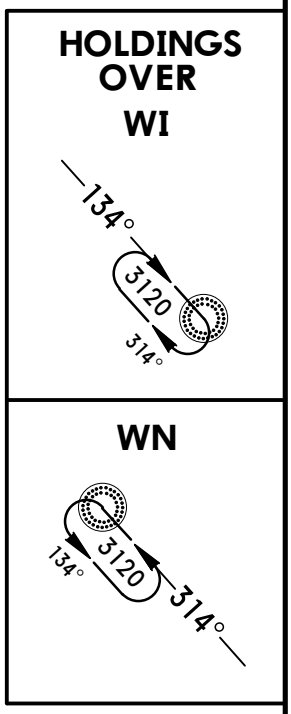

FT/METER CONVERSION
QNH

10010′	-	3050m
6070′	-	1850m
4270′	-	1300m
3120′	-	950m

STAR	RWY	ROUTING
KOROP 3C	13	On 075° track to SLODA, turn LEFT, intercept 064° bearing to WI.
KOROP 1H	31	On 085° track to BOKNU, turn LEFT, intercept 071° bearing to WN.
TAKET 2D		On 058° track to BOKNU, turn RIGHT, intercept 071° bearing to WN.
TAKET 1H	13	On 047° track to SLODA, turn RIGHT, intercept 064° bearing to WI.

CHANGES: New chart.

© JEPPESEN, 2009. ALL RIGHTS RESERVED.

Apt Elev 974′	Trans level: By ATC Trans alt: 10010′ Noise abatement procedures should be applied at all times according to ICAO Annex 16 chapter 2 & 3.

NEMYRIV THREE ALFA (NM 3A)
NEMYRIV ONE GOLF (NM 1G)
POGER THREE ALFA (POGER 3A)
POGER THREE CHARLIE (POGER 3C)
RWYS 13, 31 DEPARTURES
TO EAST

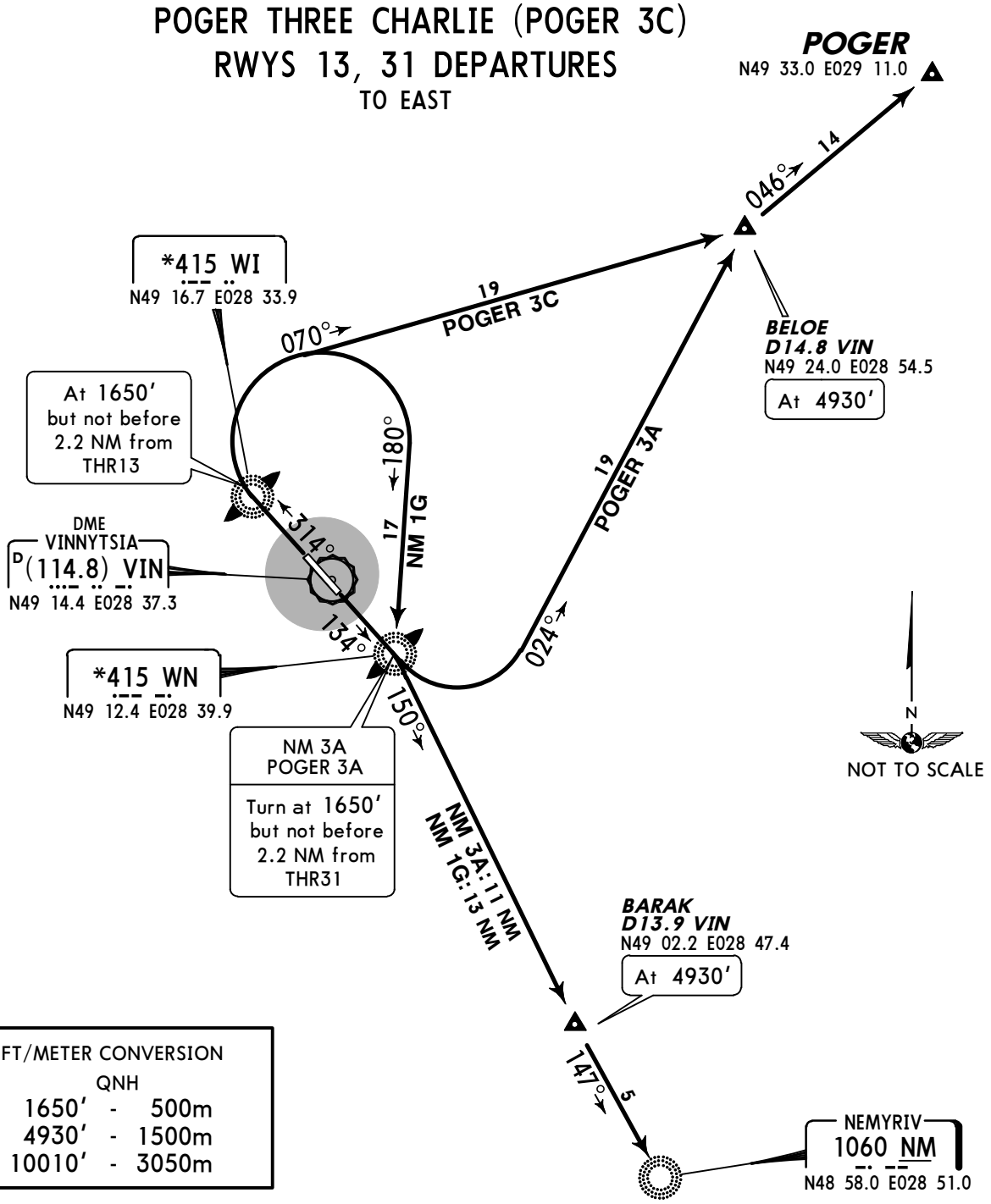

FT/METER CONVERSION QNH		
1650′	-	500m
4930′	-	1500m
10010′	-	3050m

SID	RWY	ROUTING
NM 3A	13	Climb on 134° track, at 1650′ but not before 2.2 NM from THR31 turn RIGHT, 150° track to BARAK, turn LEFT, intercept 147° bearing to NM.
NM 1G	31	Climb on 314° track, at 1650′ but not before 2.2 NM from THR13 turn RIGHT, intercept 180° bearing to WN, turn LEFT, 150° bearing to BARAK, turn LEFT, intercept 147° bearing to NM.
POGER 3A	13	Climb on 134° track, at 1650′ but not before 2.2 NM from THR31 turn LEFT, 024° track to BELOE, turn RIGHT, 046° track to POGER.
POGER 3C	31	Climb on 314° track, at 1650′ but not before 2.2 NM from THR13 turn RIGHT, 070° track to BELOE, turn LEFT, 046° track to POGER.

CHANGES: New chart.

© JEPPESEN, 2009. ALL RIGHTS RESERVED.

Apt Elev 974′	Trans level: By ATC Trans alt: 10010′ Noise abatement procedures should be applied at all times according to ICAO Annex 16 chapter 2 & 3.

3200′
MSA
WI/WN Lctr

KOROP THREE BRAVO (KOROP 3B)
KOROP ONE GOLF (KOROP 1G)
TAKET TWO ALFA (TAKET 2A)
TAKET ONE GOLF (TAKET 1G)
RWYS 31, 13 DEPARTURES
TO WEST

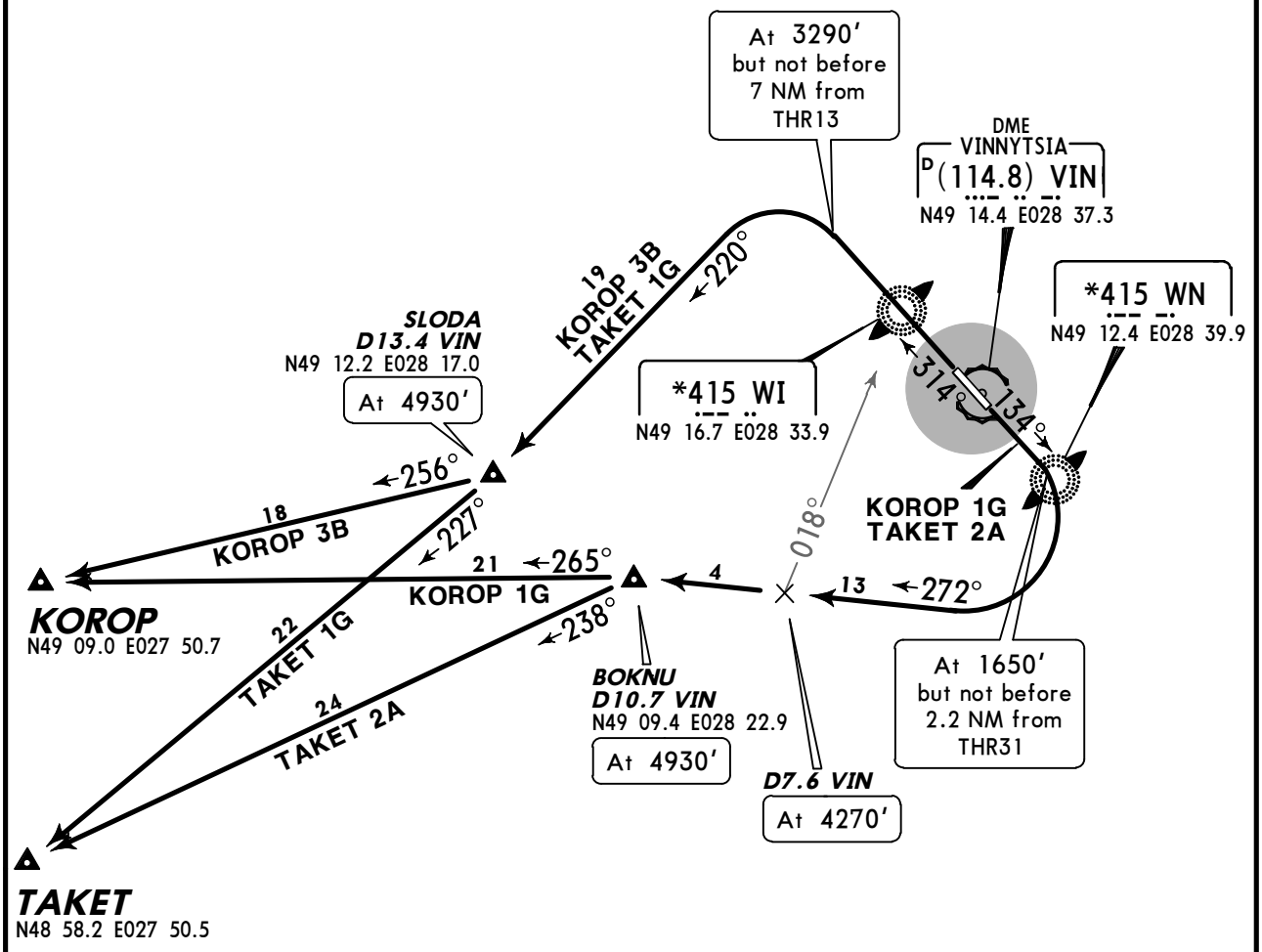

N
NOT TO SCALE

FT/METER CONVERSION
QNH

1650′	-	500m
3290′	-	1000m
4270′	-	1300m
4930′	-	1500m
10010′	-	3050m

SID	RWY	ROUTING
KOROP 3B	31	Climb on 314° track, at 3290′ but not before 7 NM from THR13 turn LEFT, 220° track to SLODA, turn RIGHT, 256° track to KOROP.
KOROP 1G	13	Climb on 134° track, at 1650′ but not before 2.2 NM from THR31 turn RIGHT, 272° track to BOKNU, turn LEFT, 265° track to KOROP.
TAKET 2A		Climb on 134° track, at 1650′ but not before 2.2 NM from THR31 turn RIGHT, 272° track to BOKNU, turn LEFT, 238° track to TAKET.
TAKET 1G	31	Climb on 314° track, at 3290′ but not before 7 NM from THR13 turn LEFT, 220° track to SLODA, turn RIGHT, 227° track to TAKET.

CHANGES: New chart.

© JEPPESEN, 2009. ALL RIGHTS RESERVED.

*BASKET Start (TWR)	*VINNYTSIA Tower (english on request only)
124.0	128.0

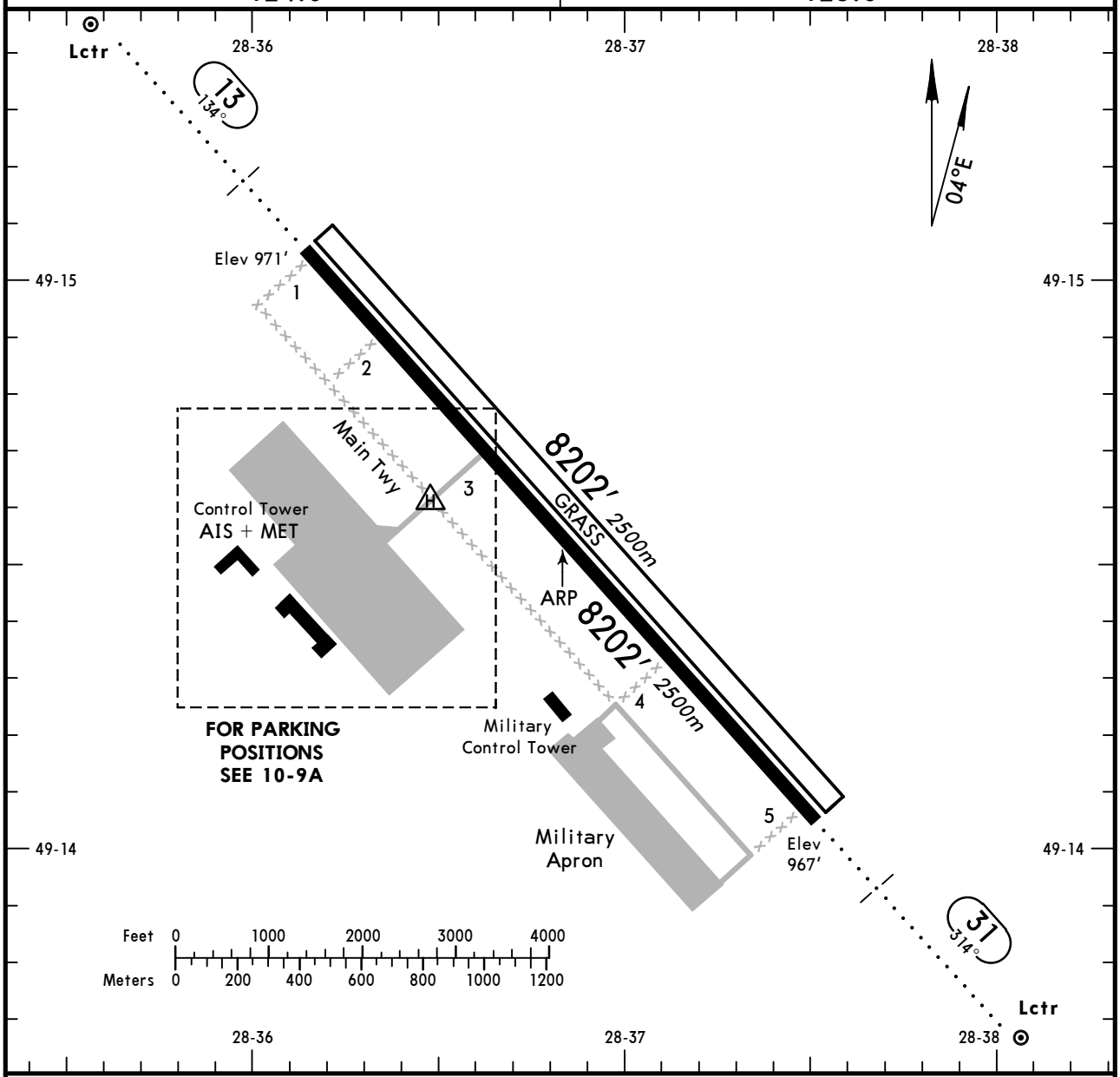

ADDITIONAL RUNWAY INFORMATION

RWY		USABLE LENGTHS LANDING BEYOND Threshold	Glide Slope	TAKE-OFF	WIDTH
13 31	RL *(100m)* ALS		6987′ *2130m*		138′ *42m*
13 31	Grass runway				249′ *76m*

JAR-OPS TAKE-OFF [1]

	Main Rwy		
	LVP must be in force		
	RCLM (DAY only) or RL	RCLM (DAY only) or RL	NIL (DAY only)
A	*250m*	*400m*	*500m*
B			
C			
D	*300m*		

[1] Operators applying U.S. Ops Specs: CL required below 300m.

CHANGES: None.

© JEPPESEN, 2009. ALL RIGHTS RESERVED.

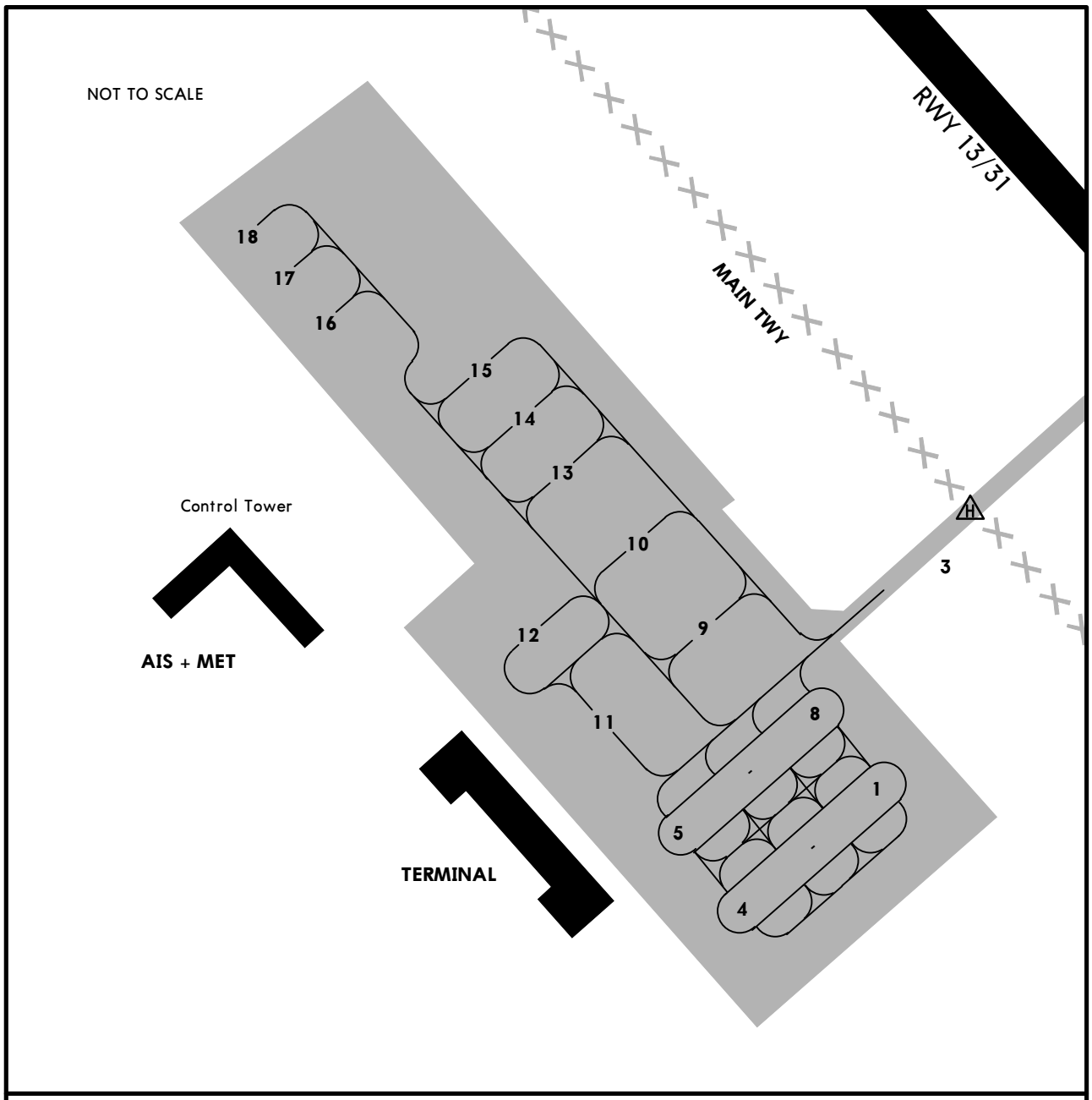

CHANGES: Parking stands.

© JEPPESEN, 2009, 2010. ALL RIGHTS RESERVED.

STRAIGHT-IN RWY		A	B	C	D
13	ILS	**1178**′(207′) **R1000m**	**1188**′(217′) **R1000m**	**1197**′(226′) **R1000m**	**1207**′(236′) **R1000m**
	ALS out	R1200m	R1200m	R1200m	R1200m
	LOC	NOT AUTHORIZED	NOT AUTHORIZED	NOT AUTHORIZED	NOT AUTHORIZED
	NDB ❶	**1320**′(349′) **R1400m**	**1320**′(349′) **R1400m**	**1320**′(349′) **R1400m**	**1320**′(349′) **R1400m**
	ALS out	R1500m	R1500m	R1600m	R1600m
31	ILS	**1170**′(203′) **R1000m**	**1180**′(213′) **R1000m**	**1190**′(223′) **R1000m**	**1200**′(233′) **R1000m**
	ALS out	R1200m	R1200m	R1200m	R1200m
	LOC	NOT AUTHORIZED	NOT AUTHORIZED	NOT AUTHORIZED	NOT AUTHORIZED
	NDB ❶	**1320**′(353′) **R1400m**	**1320**′(353′) **R1400m**	**1320**′(353′) **R1400m**	**1320**′(353′) **R1400m**
	ALS out	R1500m	R1500m	R1600m	R1600m

❶ Continuous Descent Final Approach.

CIRCLE-TO-LAND	100 KT	135 KT	180 KT	205 KT
	1380′(406′) V1500m	**1480**′(506′) V1600m	**1650**′(676′) V2400m	**1680**′(706′) V3600m

TAKE-OFF RWY 13, 31

	LVP must be in Force RCLM (DAY only) or RL	RCLM (DAY only) or RL	NIL (DAY only)
A, B, C	250m	400m	500m
D	300m		

© JEPPESEN, 2011. ALL RIGHTS RESERVED.

BRIEFING STRIP ™

*VINNYTSIA Tower (english on request only)	*BASKET Start (TWR)
128.0	124.0

LOC	Final Apch Crs	GS LOM	ILS DA(H)	Apt Elev 974′
IWI *111.1	134°	1722′ (751′)	Refer to Minimums	RWY 971′
Lctr WI *415		Minimum Alt D5.0 VIN 2300′ (1329′)	NDB MDA(H) 1320′ (349′)	

MISSED APCH: Climb on 134° to 1650′, then turn RIGHT onto 314° climbing to 3120′, then according to chart.

3200′ MSA WI Lctr

Alt Set: hPa (MM on req) | Rwy Elev: 35 hPa | Trans level: By ATC | Trans alt: 10010′

FT/METER CONVERSION
QNH

10010′	-	3050m
4270′	-	1300m
3120′	-	950m
2300′	-	700m
1730′	-	525m
1650′	-	500m

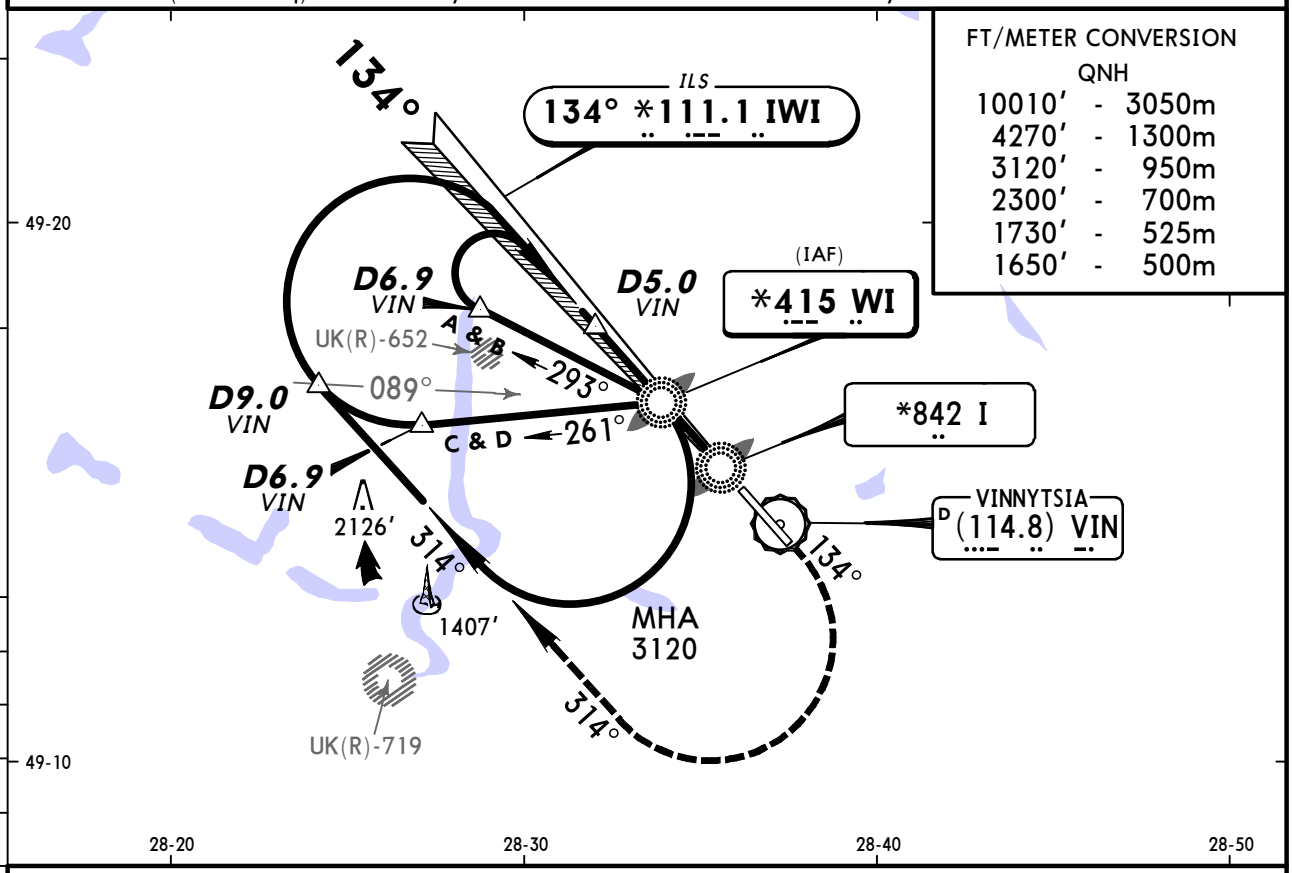

BASETURN: W/o DME Start turn at
CAT A & B: 1½ Min
CAT C & D: 1 Min

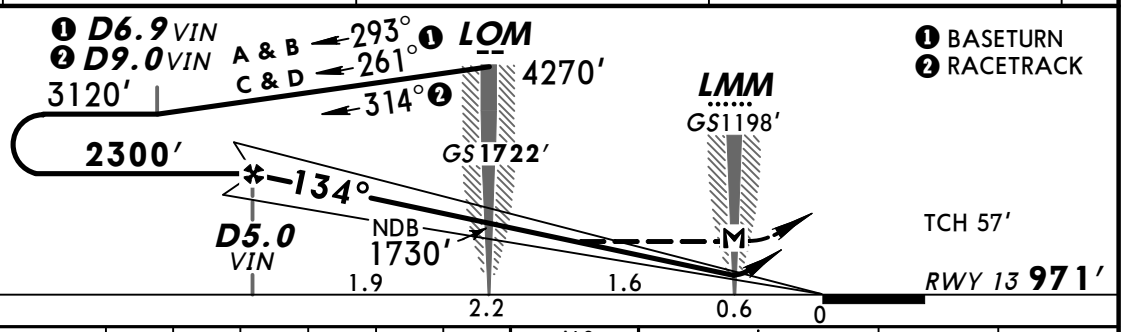

Gnd speed-Kts	70	90	100	120	140	160
ILS GS or NDB Desc angle 3.00°	377	484	538	646	753	861
MAP at LMM						

ALS

1650′ on 134° | 314° RT | 3120′

JAR-OPS STRAIGHT-IN LANDING RWY 13

DA(H)	ILS		LOC (GS out)	NDB MDA(H) 1320′ (349′)	
	A: 1178′ (207′) C: 1197′ (226′) B: 1188′ (217′) D: 1207′ (236′)				
	FULL	ALS out			ALS out
A	RVR 800m	RVR 1000m	NOT AUTH	RVR 1300m	RVR 1500m
B				RVR 1400m	
C				RVR 1600m	RVR 1800m
D				RVR 1800m	RVR 2000m

CIRCLE-TO-LAND

Max Kts.	MDA(H)	VIS
100	1380′ (406′)	1500m
135	1480′ (506′)	1600m
180	1650′ (676′)	2400m
205	1680′ (706′)	3600m

PANS OPS

CHANGES: New procedure.

© JEPPESEN, 2009. ALL RIGHTS RESERVED.

VINNYTSIA, UKRAINE
ILS or NDB Rwy 31

BRIEFING STRIP

*VINNYTSIA Tower (english on request only)	*BASKET Start (TWR)
128.0	124.0

LOC	Final Apch Crs	GS LOM	ILS DA(H)	Apt Elev 974′	3200′
IWN *110.3	314°	1739′ (772′)	Refer to Minimums	RWY 967′	
Lctr WN *415		Minimum Alt D4.4 VIN 2300′ (1333′)	NDB MDA(H) 1320′ (353′)		MSA WN Lctr

MISSED APCH: Climb on 314° to 3290′, then turn LEFT onto 134°, then according to chart.

Alt Set: hPa (MM on req) | Rwy Elev: 35 hPa | Trans level: By ATC | Trans alt: 10010′

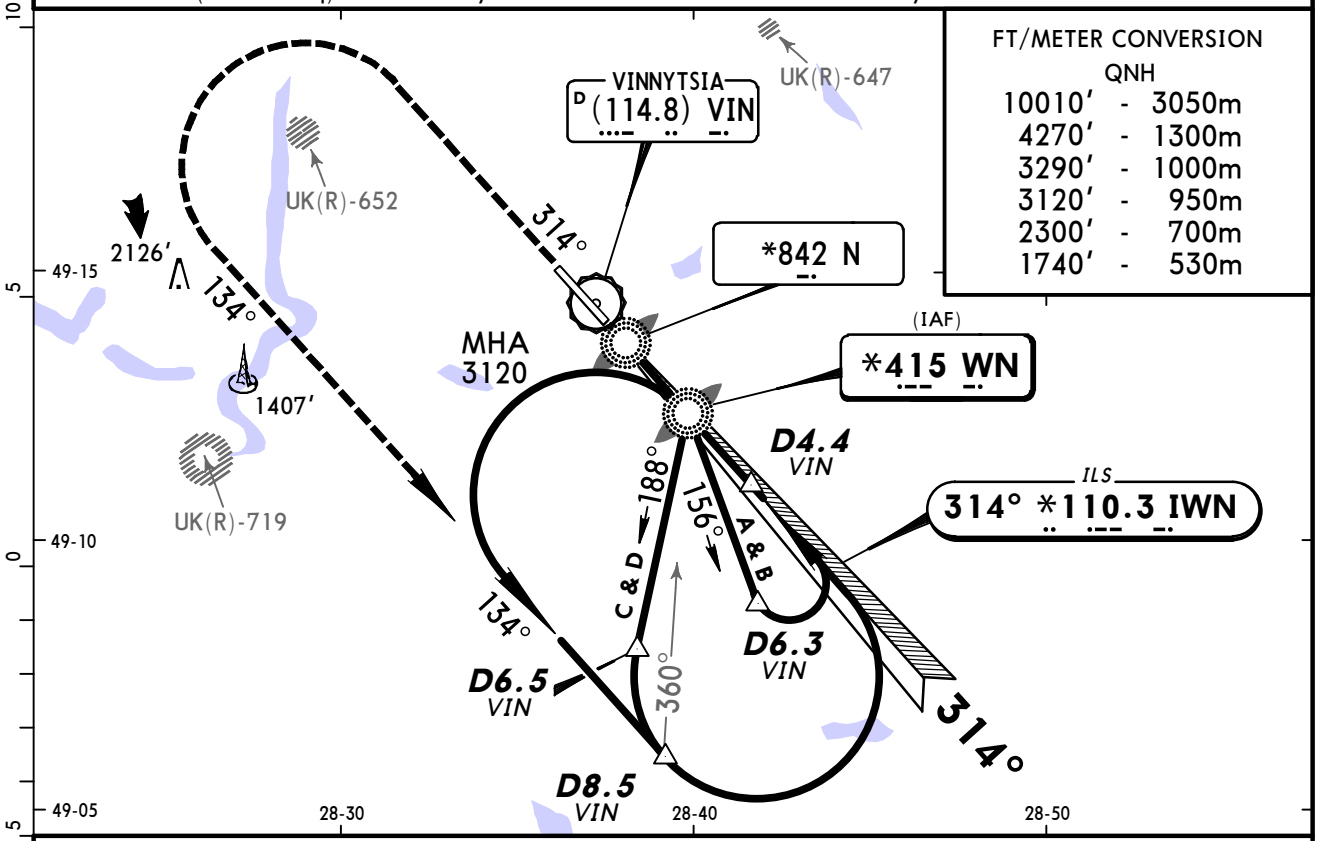

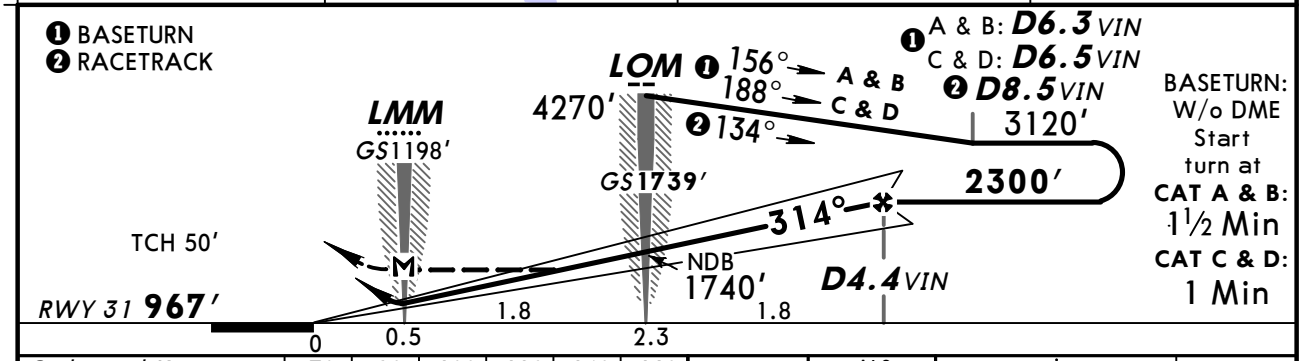

Gnd speed-Kts	70	90	100	120	140	160
ILS GS or NDB Desc angle 3.00°	377	484	538	646	753	861
MAP at LMM						

ALS

3290′ on 314°

134° LT

JAR-OPS STRAIGHT-IN LANDING RWY 31

ILS DA(H) A: 1170′ (203′) B: 1180′ (213′) C: 1190′ (223′) D: 1200′ (233′)

LOC (GS out)

NDB MDA(H) 1320′ (353′)

PANS OPS	ILS FULL	ILS ALS out	LOC (GS out)	NDB	NDB ALS out	CIRCLE-TO-LAND Max Kts	MDA(H)	VIS
A	RVR 800m	RVR 1000m	NOT AUTH	RVR 1300m	RVR 1500m	100	1380′ (406′)	1500m
B				RVR 1400m		135	1480′ (506′)	1600m
C				RVR 1600m	RVR 1800m	180	1650′ (676′)	2400m
D				RVR 1800m	RVR 2000m	205	1680′ (706′)	3600m

CHANGES: New procedure.

© JEPPESEN, 2009. ALL RIGHTS RESERVED.

(c) JEPPESEN SANDERSON, INC., 2013, ALL RIGHTS RESERVED

JEPPESEN
JeppView for Windows

Chart changes since cycle 07-2013

ADD = added chart, REV = revised chart, DEL = deleted chart.

ACT	PROCEDURE IDENT	INDEX	REV DATE	EFF DATE

VINNYTSIA, (GAVRYSHIVKA - UKWW)

(c) JEPPESEN SANDERSON, INC., 2013, ALL RIGHTS RESERVED

TERMINAL CHART CHANGE NOTICES

No Chart Change Notices for Airport UKWW