(c) JEPPESEN SANDERSON, INC., 2013, ALL RIGHTS RESERVED


# List of pages in this Trip Kit

Trip Kit Index
Airport Information For UKCC
Terminal Charts For UKCC
Revision Letter For Cycle 08-2013
Change Notices
Notebook

(c) JEPPESEN SANDERSON, INC., 2013, ALL RIGHTS RESERVED


## General Information

Location: Donets'k  Ukr
IATA Code: DOK
Lat/Long: N48° 04.5' E037° 43.5'
Elevation: 783 ft

Airport Use: Public
Magnetic Variation: 7.6°E

Fuel Types: Jet A-1
Repair Types: Minor Airframe, Minor Engine
Customs: Yes
Airport Type: IFR
Landing Fee: No
Control Tower: Yes
Jet Start Unit: Yes
LLWS Alert: No
Beacon: No

Sunrise: 0241 Z
Sunset: 1618 Z,

## Runway Information

Runway: 08
Length x Width: 13123 ft x 157 ft
Surface Type: concrete
TDZ-Elev: 709 ft
Lighting: Edge, ALS, Centerline, TDZ

Runway: 26
Length x Width: 13123 ft x 157 ft
Surface Type: concrete
TDZ-Elev: 783 ft
Lighting: Edge, ALS, Centerline

## Communication Information

ATIS 130.9
ATIS 121.3 Non-English
Donets'k Tower 118.3
Donets'k Ground Control 119.0
Donets'k Approach Radar Approach Control 134.0
Donets'k Approach Radar Approach Control 129.8
Donets'k Approach Radar Approach Control 127.3 Secondary
Donets'k Approach Radar Approach Control 126.35

| DONETS'K Approach (R) | Apt Elev | Alt Set: hPa (MM on request) |
|---|---|---|
| 134.0 | 783' | Trans level: By ATC Trans alt: 10010' |

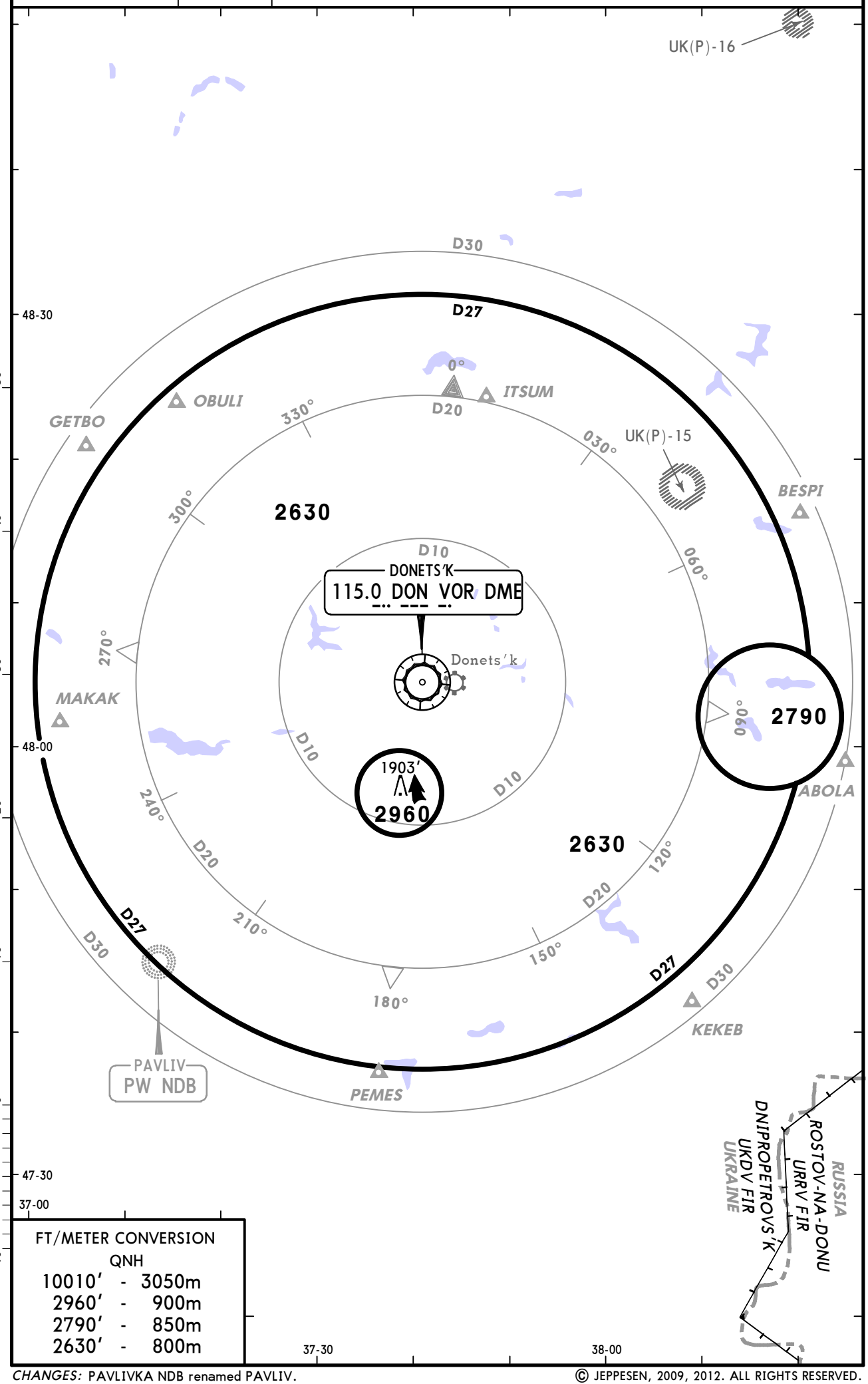


| FT/METER CONVERSION QNH | |
|---|---|
| 10010' | 3050m |
| 2960' | 900m |
| 2790' | 850m |
| 2630' | 800m |

*CHANGES:* PAVLIVKA NDB renamed PAVLIV.

© JEPPESEN, 2009, 2012. ALL RIGHTS RESERVED.

| ATIS | Apt Elev | |
|---|---|---|
| 130.9 (Russian 121.3) | 783' | Alt Set: hPa (MM on request)<br>Trans level: By ATC Trans alt: 10010' |

# BELOL TWO LIMA (BELOL 2L) *[BELO2L]*
# LIPSO TWO LIMA (LIPSO 2L) *[LIPS2L]*
# PAVLIV TWO LIMA (PW 2L)
# RWY 08 ARRIVALS

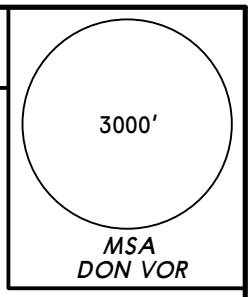


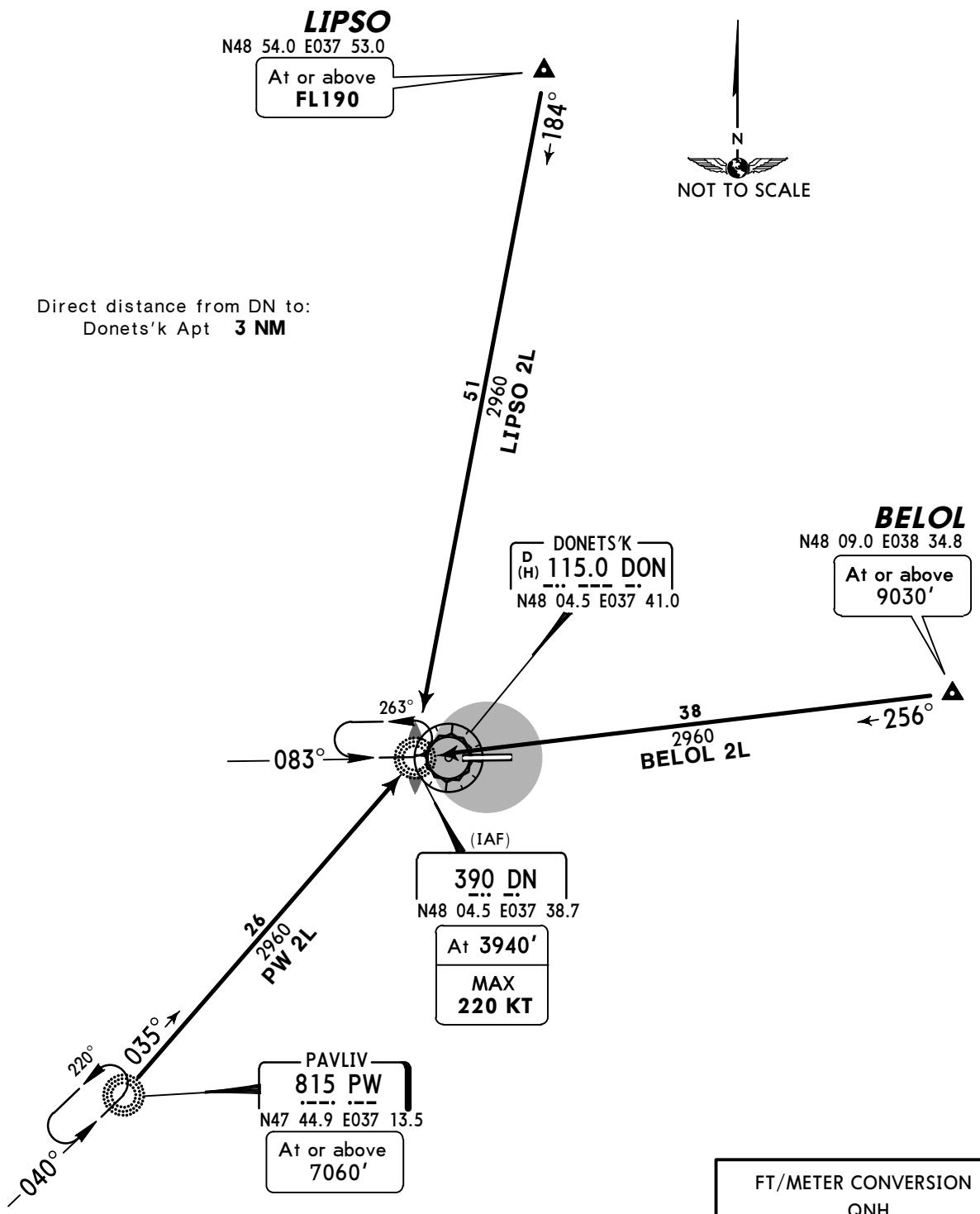


FT/METER CONVERSION
QNH

| | | |
|---|---|---|
| 10010' | - | 3050m |
| 9030' | - | 2750m |
| 7060' | - | 2150m |
| 3940' | - | 1200m |

| STAR | ROUTING |
|---|---|
| BELOL 2L | Intercept 256° bearing to DN. |
| LIPSO 2L | Intercept 184° bearing to DN. |
| PW 2L | Intercept 035° bearing to DN. |

*CHANGES:* ATIS commissioned.

© JEPPESEN, 2011, 2012. ALL RIGHTS RESERVED.

| ATIS | Apt Elev | |
|---|---|---|
| 130.9 (Russian 121.3) | 783' | Alt Set: hPa (MM on request)<br>Trans level: By ATC Trans alt: 10010' |

# BELOL TWO NOVEMBER (BELOL 2N) *[BELO2N]*
# LIPSO TWO NOVEMBER (LIPSO 2N) *[LIPS2N]*
# PAVLIV TWO NOVEMBER (PW 2N)
# RWY 26 ARRIVALS

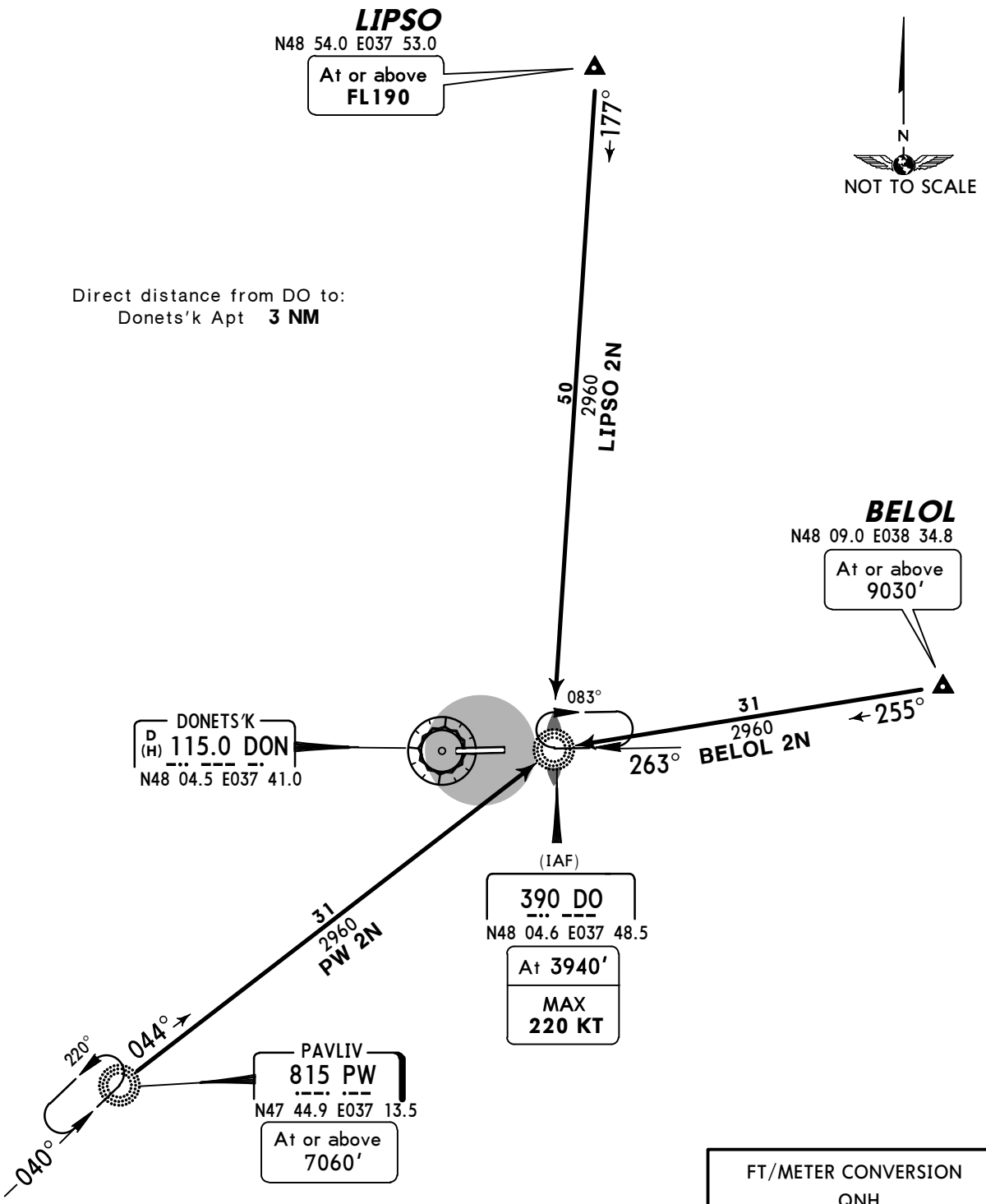


FT/METER CONVERSION
QNH

| | | |
|---|---|---|
| 10010' | - | 3050m |
| 9030' | - | 2750m |
| 7060' | - | 2150m |
| 3940' | - | 1200m |

| STAR | ROUTING |
|---|---|
| BELOL 2N | Intercept 255° bearing to DO. |
| LIPSO 2N | Intercept 177° bearing to DO. |
| PW 2N | Intercept 044° bearing to DO. |

*CHANGES:* ATIS commissioned.

© JEPPESEN, 2011, 2012. ALL RIGHTS RESERVED.

| ATIS | Apt Elev | |
|---|---|---|
| 130.9 (Russian 121.3) | 783' | Alt Set: hPa (MM on request)<br>Trans level: By ATC Trans alt: 10010' |

# KOSIR ONE LIMA (KOSIR 1L) *[KOSI1L]*
# PENAK ONE LIMA (PENAK 1L) *[PENA1L]*
# RWY 08 ARRIVALS

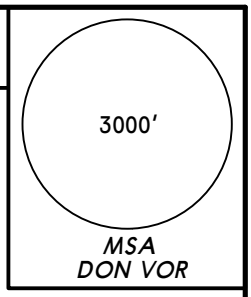


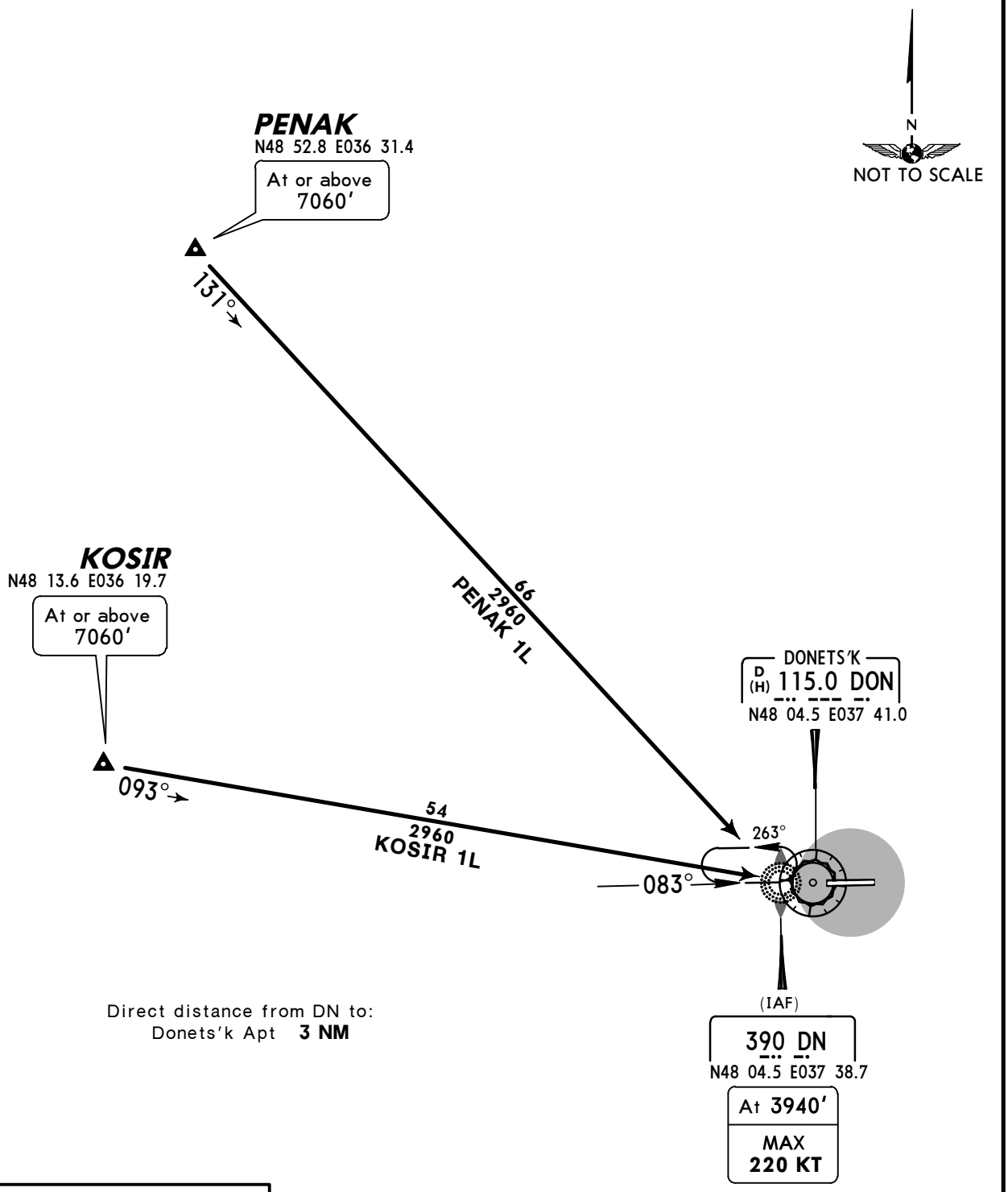


Direct distance from DN to:
Donets'k Apt **3 NM**

| FT/METER CONVERSION QNH | | |
|---|---|---|
| 10010' | - | 3050m |
| 7060' | - | 2150m |
| 3940' | - | 1200m |

| STAR | ROUTING |
|---|---|
| **KOSIR 1L** | Intercept 093° bearing to DN. |
| **PENAK 1L** | Intercept 131° bearing to DN. |

*CHANGES:* STAR GUBKI 2L withdrawn.

© JEPPESEN, 2011, 2012. ALL RIGHTS RESERVED.

| ATIS | Apt Elev | |
|---|---|---|
| 130.9 (Russian 121.3) | 783' | Alt Set: hPa (MM on request)<br>Trans level: By ATC Trans alt: 10010' |

# KOSIR ONE NOVEMBER (KOSIR 1N) *[KOSI1N]*
# PENAK ONE NOVEMBER (PENAK 1N) *[PENA1N]*
# RWY 26 ARRIVALS

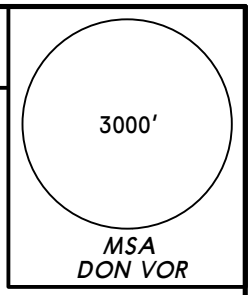


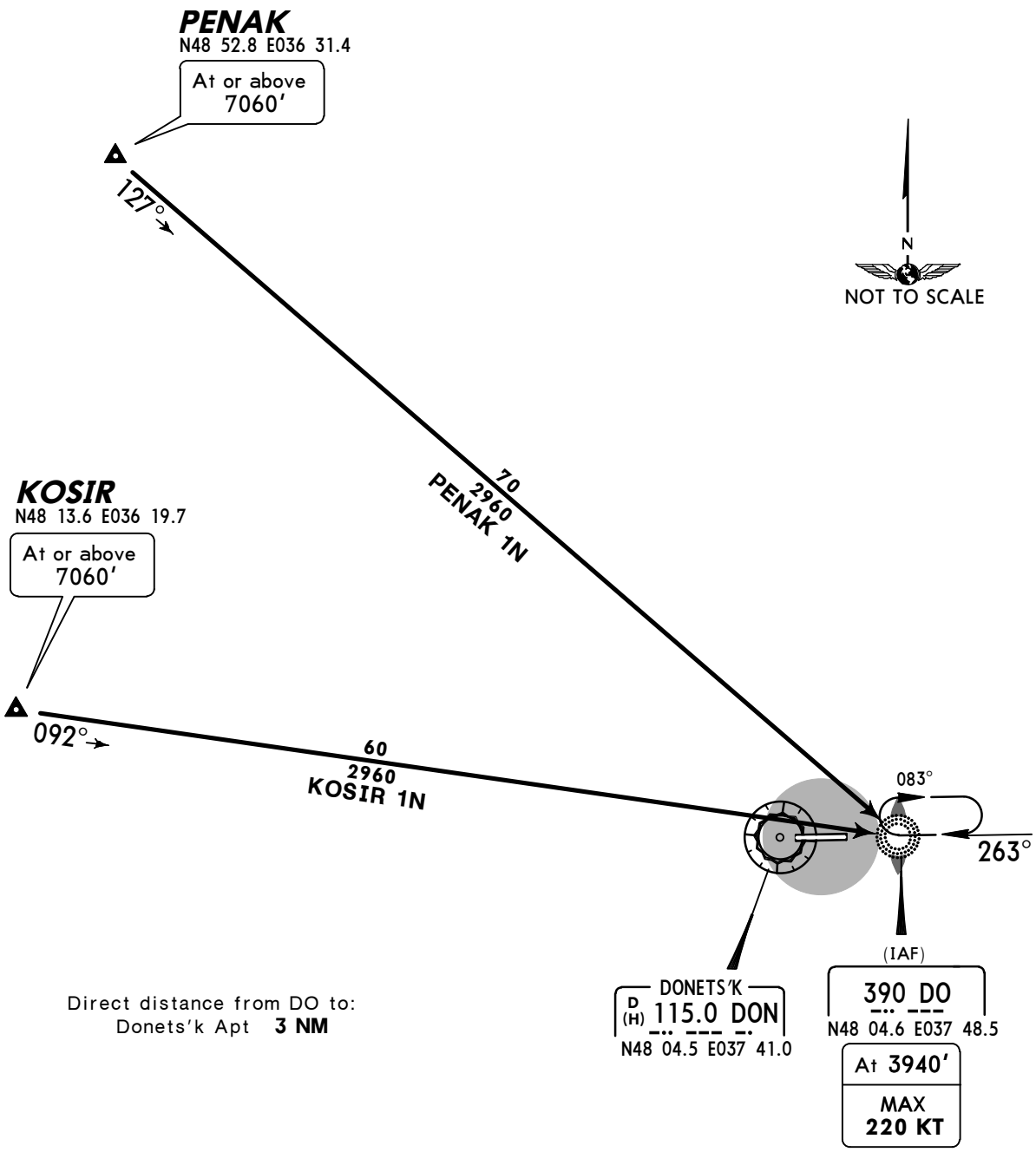


Direct distance from DO to:
Donets'k Apt **3 NM**

FT/METER CONVERSION
QNH

| | | |
|---|---|---|
| 10010' | - | 3050m |
| 7060' | - | 2150m |
| 3940' | - | 1200m |

| STAR | ROUTING |
|---|---|
| **KOSIR 1N** | Intercept 092° bearing to DO. |
| **PENAK 1N** | Intercept 127° bearing to DO. |

*CHANGES:* STAR GUBKI 2N withdrawn.

© JEPPESEN, 2011, 2012. ALL RIGHTS RESERVED.

| ATIS | Apt Elev | |
|---|---|---|
| 130.9 (Russian 121.3) | 783' | Alt Set: hPa (MM on request)<br>Trans level: By ATC Trans alt: 10010'<br>EXPECT RADAR vectors to final. |

# BELOL THREE ROMEO (BELOL 3R) *[BELO3R]*
# LIPSO THREE ROMEO (LIPSO 3R) *[LIPS3R]*
## RWY 08 RNAV TRANSITIONS

RNAV (GNSS)
RNAV 1 (P-RNAV) APPROVAL REQUIRED
OTHERWISE ADVISE ATC

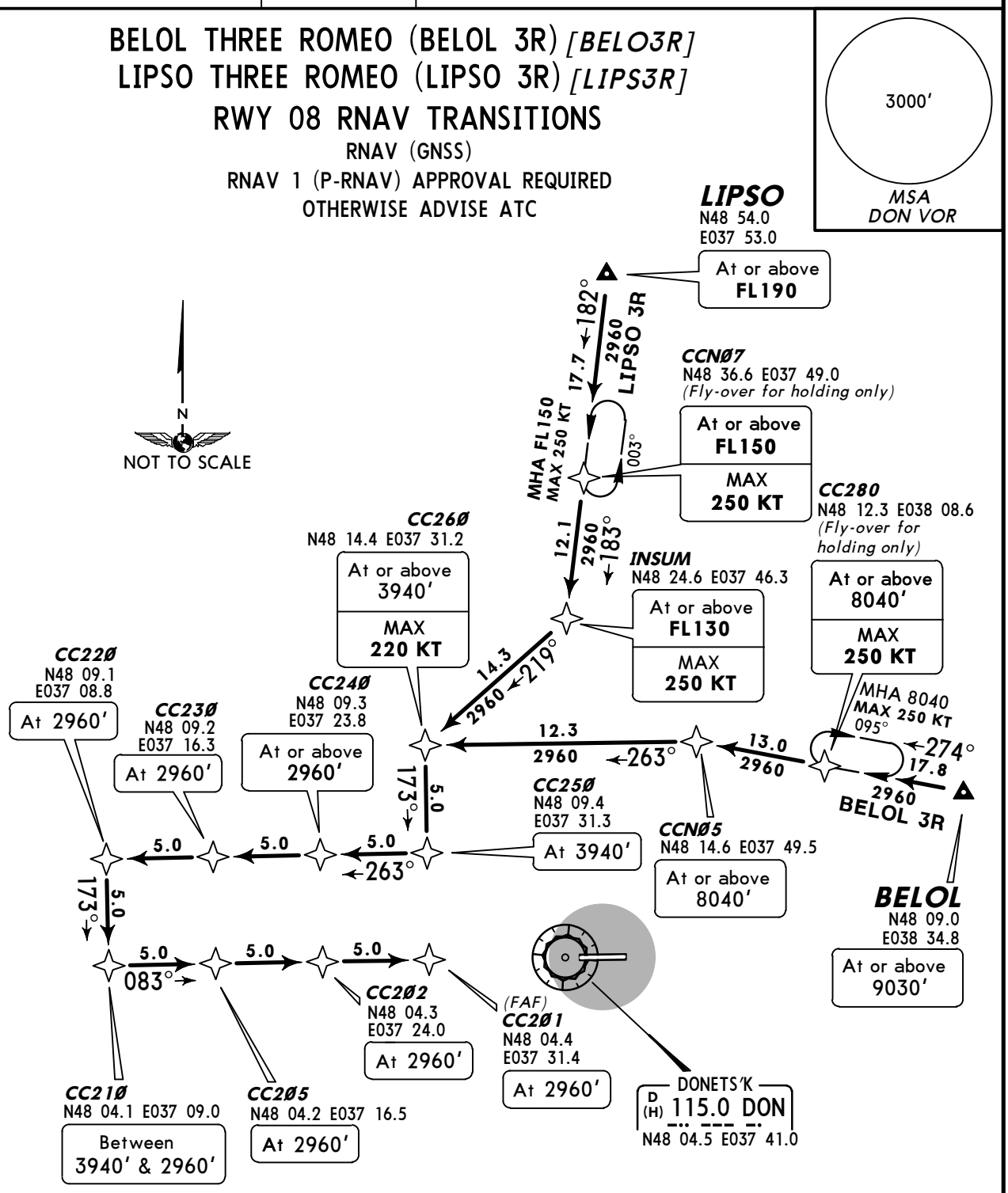


Direct distance from CC201 to:
Donets'k Apt **8 NM**

FT/METER CONVERSION
QNH

| | | |
|---|---|---|
| 10010' | - | 3050m |
| 9030' | - | 2750m |
| 8040' | - | 2450m |
| 3940' | - | 1200m |
| 2960' | - | 900m |

| TRANSITION | ROUTING |
|---|---|
| **BELOL 3R** | BELOL (9030'+) - CC280 (8040'+; K250-) - CCN05 (8040'+) - CC260 (3940+; K220-) - CC250 (3940') - CC240 (2960'+) - CC230 (2960') - CC220 (2960') - CC210 (3940-; 2960'+) - CC205 (2960') - CC202 (2960') - CC201 (2960'). |
| **LIPSO 3R** | LIPSO (FL190+) - CCN07 (FL150+; K250-) - INSUM (FL130+; K250-) - CC260 (3940+; K220-) - CC250 (3940') - CC240 (2960'+) - CC230 (2960') - CC220 (2960') - CC210 (3940-; 2960'+) - CC205 (2960') - CC202 (2960') - CC201 (2960'). |

*CHANGES:* RNAV sensor.

© JEPPESEN, 2011, 2013. ALL RIGHTS RESERVED.

| ATIS | Apt Elev | |
|---|---|---|
| 130.9 (Russian 121.3) | 783' | Alt Set: hPa (MM on request)<br>Trans level: By ATC Trans alt: 10010'<br>EXPECT RADAR vectors to final. |

3000'
MSA
DON VOR

# BELOL TWO TANGO (BELOL 2T) *[BELO2T]*
## RWY 26 RNAV TRANSITION
RNAV (GNSS)
RNAV 1 (P-RNAV) APPROVAL REQUIRED
OTHERWISE ADVISE ATC

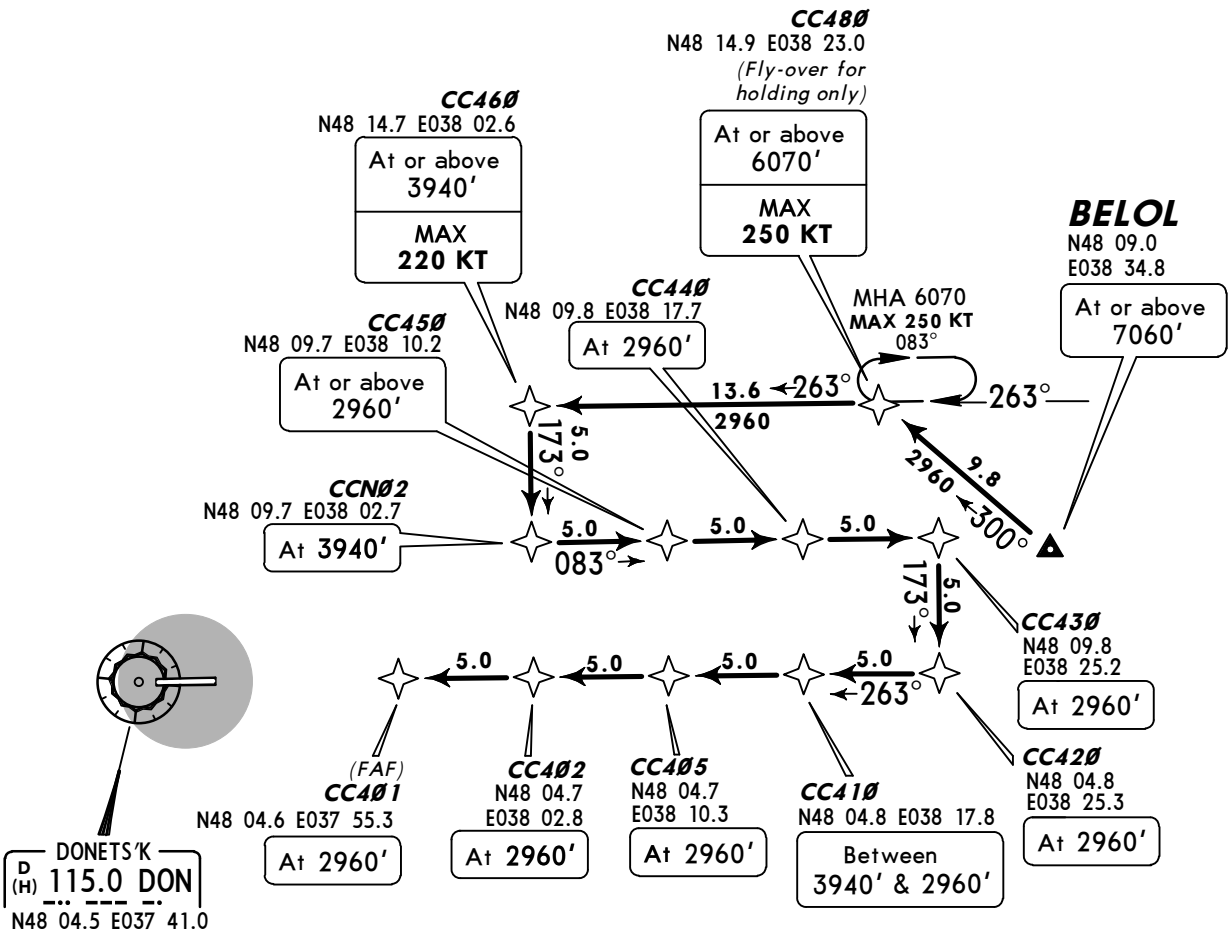


Direct distance from CC401 to:
Donets'k Apt **8 NM**

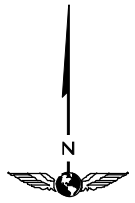


NOT TO SCALE

| FT/METER CONVERSION QNH | |
|---|---|
| 10010' | 3050m |
| 7060' | 2150m |
| 6070' | 1850m |
| 3940' | 1200m |
| 2960' | 900m |

**ROUTING**

BELOL (7060'+) - CC480 (6070+; K250-) - CC460 (3940+; K220-) - CCN02 (3940') - CC450 (2960'+) - CC440 (2960') - CC430 (2960') - CC420 (2960') - CC410 (3940-; 2960'+) - CC405 (2960') - CC402 (2960') - CC401 (2960').

*CHANGES:* RNAV sensor.

© JEPPESEN, 2011, 2013. ALL RIGHTS RESERVED.

| ATIS | Apt Elev | |
|---|---|---|
| 130.9 (Russian 121.3) | 783' | Alt Set: hPa (MM on request)<br>Trans level: By ATC Trans alt: 10010'<br>EXPECT RADAR vectors to final. |

# PAVLIV TWO ROMEO (PW 2R)
## RWY 08 RNAV TRANSITION

RNAV (GNSS)
RNAV 1 (P-RNAV) APPROVAL REQUIRED
OTHERWISE ADVISE ATC

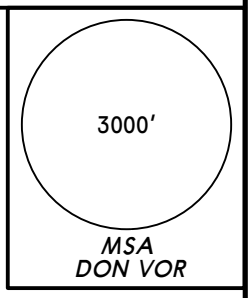


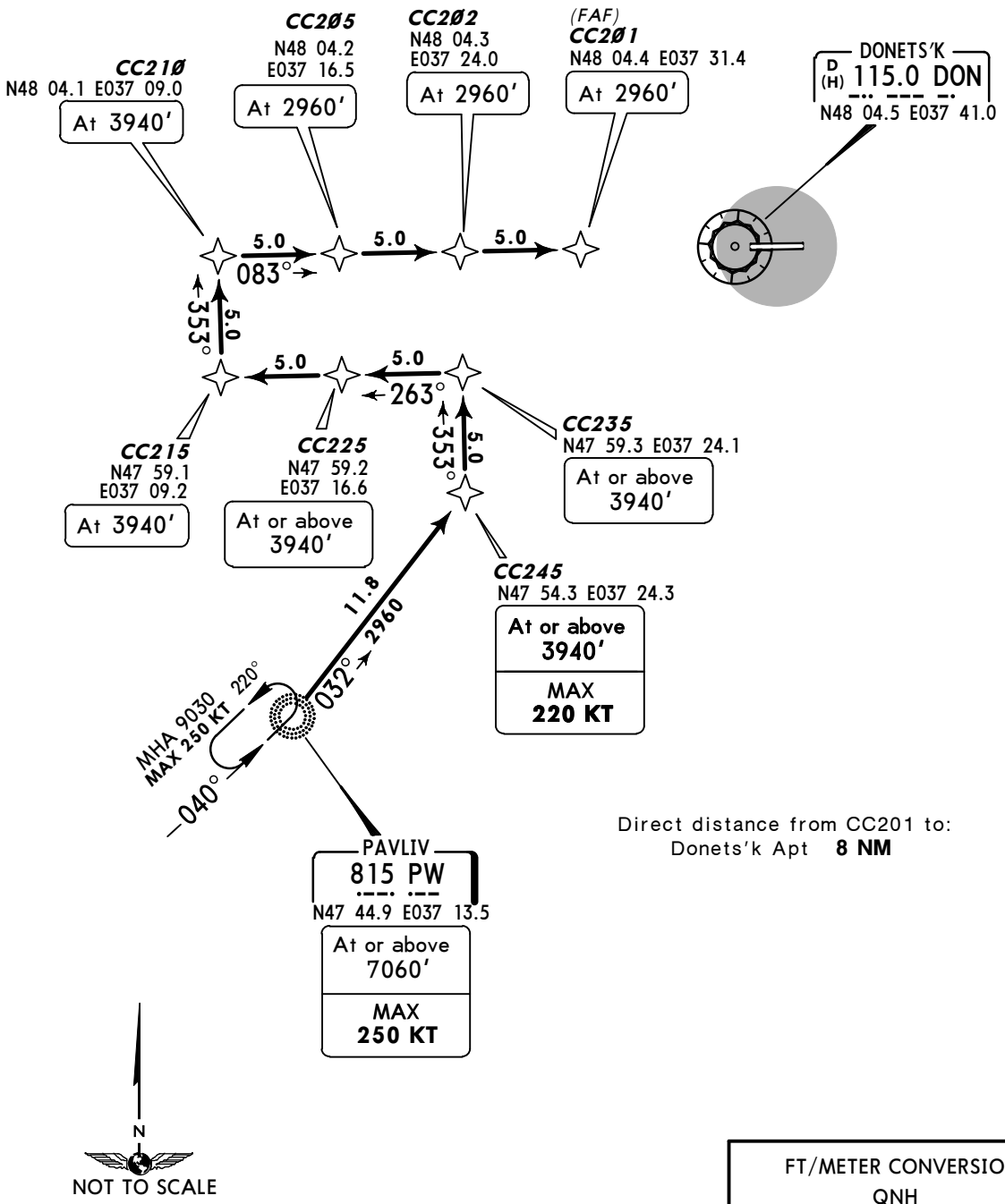


Direct distance from CC201 to:
Donets'k Apt **8 NM**

FT/METER CONVERSION
QNH

| | | |
|---|---|---|
| 10010' | - | 3050m |
| 9030' | - | 2750m |
| 7060' | - | 2150m |
| 3940' | - | 1200m |
| 2960' | - | 900m |

**ROUTING**

PW (7060'+; K250-) - CC245 (3940'+; K220-) - CC235 (3940'+) - CC225 (3940'+) - CC215 (3940') - CC210 (3940') - CC205 (2960') - CC202 (2960') - CC201 (2960').

*CHANGES:* RNAV sensor.

© JEPPESEN, 2012, 2013. ALL RIGHTS RESERVED.

| ATIS | Apt Elev | |
|---|---|---|
| 130.9 (Russian 121.3) | 783' | Alt Set: hPa (MM on request)<br>Trans level: By ATC Trans alt: 10010'<br>EXPECT RADAR vectors to final. |

3000'
MSA
DON VOR

# PAVLIV TWO TANGO (PW 2T)
# RWY 26 RNAV TRANSITION

RNAV (GNSS)
RNAV 1 (P-RNAV) APPROVAL REQUIRED
OTHERWISE ADVISE ATC

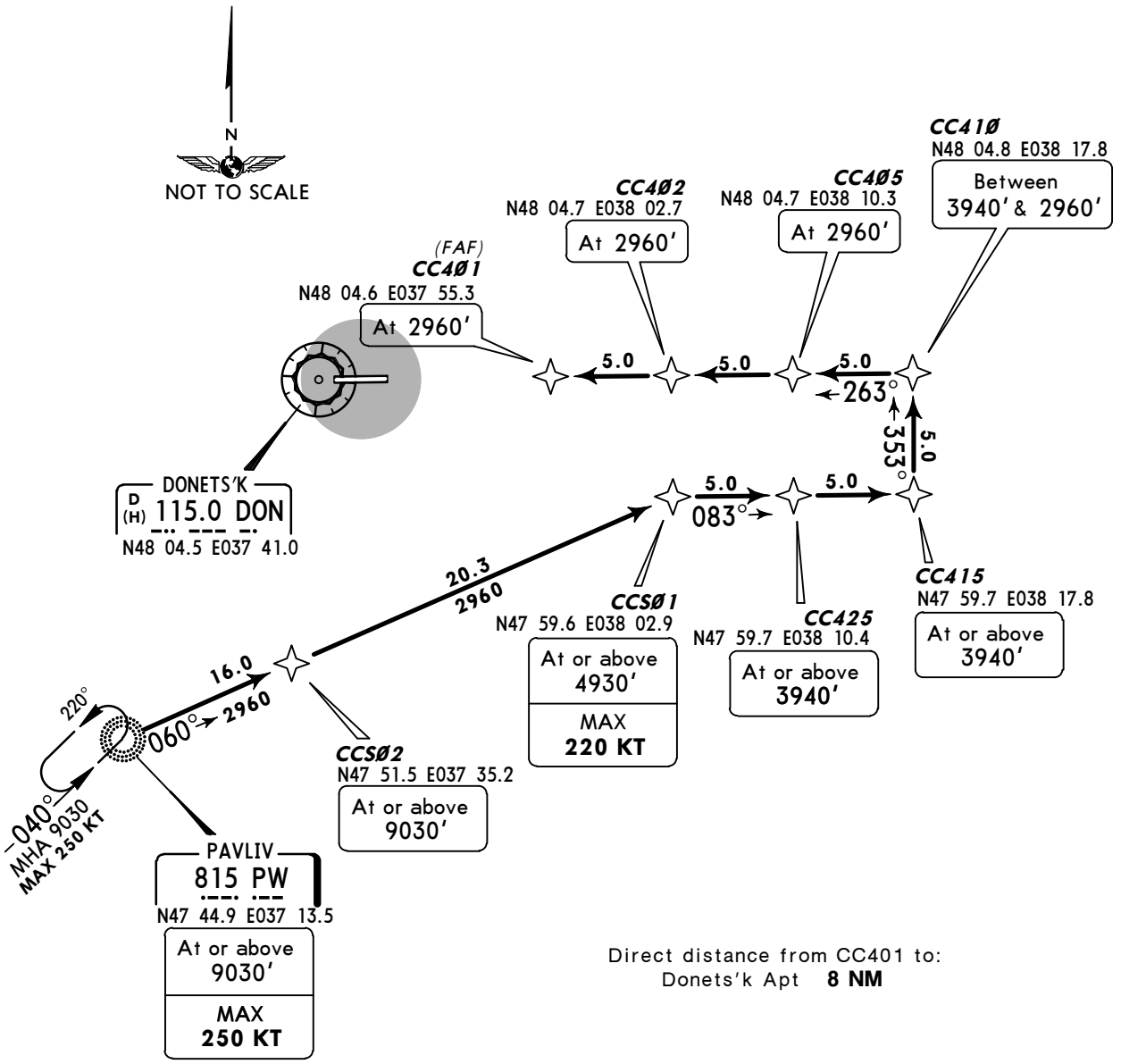


Direct distance from CC401 to:
Donets'k Apt **8 NM**

| FT/METER CONVERSION | | |
|---|---|---|
| QNH | | |
| 10010' | - | 3050m |
| 9030' | - | 2750m |
| 4930' | - | 1500m |
| 3940' | - | 1200m |
| 2960' | - | 900m |

**ROUTING**

PW (9030'+; K250-) - CCS02 (9030'+) - CCS01 (4930'+; K220-) - CC425 (3940'+) - CC415 (3940'+) - CC410 (3940'-; 2960'+) - CC405 (2960') - CC402 (2960') - CC401 (2960').

*CHANGES:* RNAV sensor.

© JEPPESEN, 2012, 2013. ALL RIGHTS RESERVED.

| ATIS | Apt Elev | |
|---|---|---|
| 130.9 (Russian 121.3) | 783' | Alt Set: hPa (MM on request)<br>Trans level: By ATC Trans alt: 10010'<br>EXPECT RADAR vectors to final. |

3000'
MSA
DON VOR

# KOSIR TWO ROMEO (KOSIR 2R) *[KOSI2R]*
# PENAK TWO ROMEO (PENAK 2R) *[PENA2R]*
## RWY 08 RNAV TRANSITIONS

RNAV (GNSS)
RNAV 1 (P-RNAV) APPROVAL REQUIRED
OTHERWISE ADVISE ATC

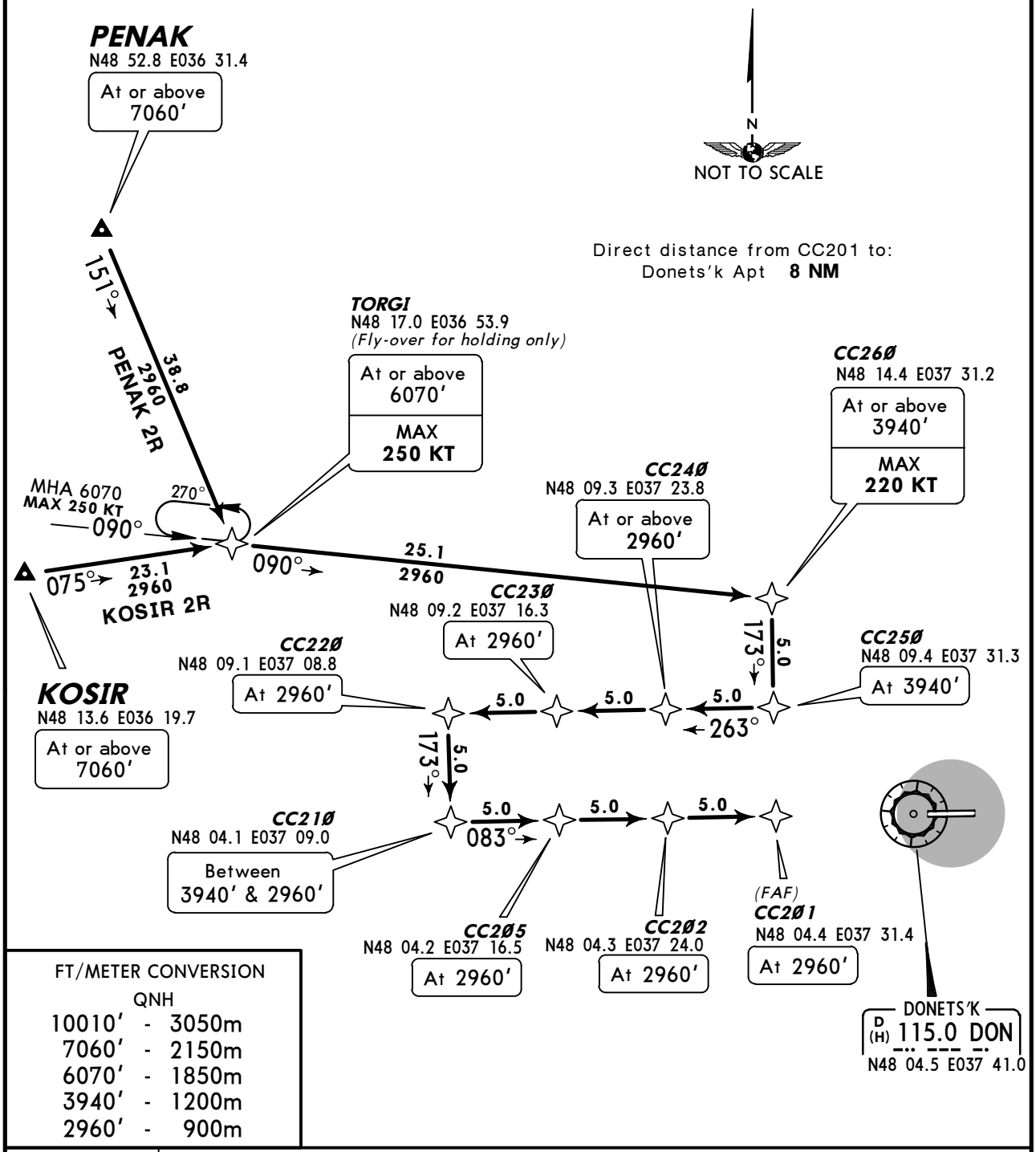


FT/METER CONVERSION
QNH

| | | |
|---|---|---|
| 10010' | - | 3050m |
| 7060' | - | 2150m |
| 6070' | - | 1850m |
| 3940' | - | 1200m |
| 2960' | - | 900m |

| TRANSITION | ROUTING |
|---|---|
| KOSIR 2R | KOSIR (7060'+) - TORGI (6070'+; K250-). |
| PENAK 2R | PENAK (7060'+) - TORGI (6070'+; K250-). |

**ROUTING**

TORGI (6070'+; K250-) - CC260 (3940+; K220-) - CC250 (3940') - CC240 (2960'+) - CC230 (2960') - CC220 (2960') - CC210 (3940-; 2960'+) - CC205 (2960') - CC202 (2960') - CC201 (2960').

*CHANGES:* RNAV sensor.

© JEPPESEN, 2012, 2013. ALL RIGHTS RESERVED.

| ATIS | Apt Elev | |
|---|---|---|
| 130.9 (Russian 121.3) | 783' | Alt Set: hPa (MM on request)<br>Trans level: By ATC Trans alt: 10010'<br>EXPECT RADAR vectors to final. |

3000'
MSA
DON VOR

# KOSIR THREE TANGO (KOSIR 3T) *[KOSI3T]*
# LIPSO THREE TANGO (LIPSO 3T) *[LIPS3T]*
# PENAK THREE TANGO (PENAK 3T) *[PENA3T]*
# RWY 26 RNAV TRANSITIONS

RNAV (GNSS)
RNAV 1 (P-RNAV) APPROVAL REQUIRED
OTHERWISE ADVISE ATC

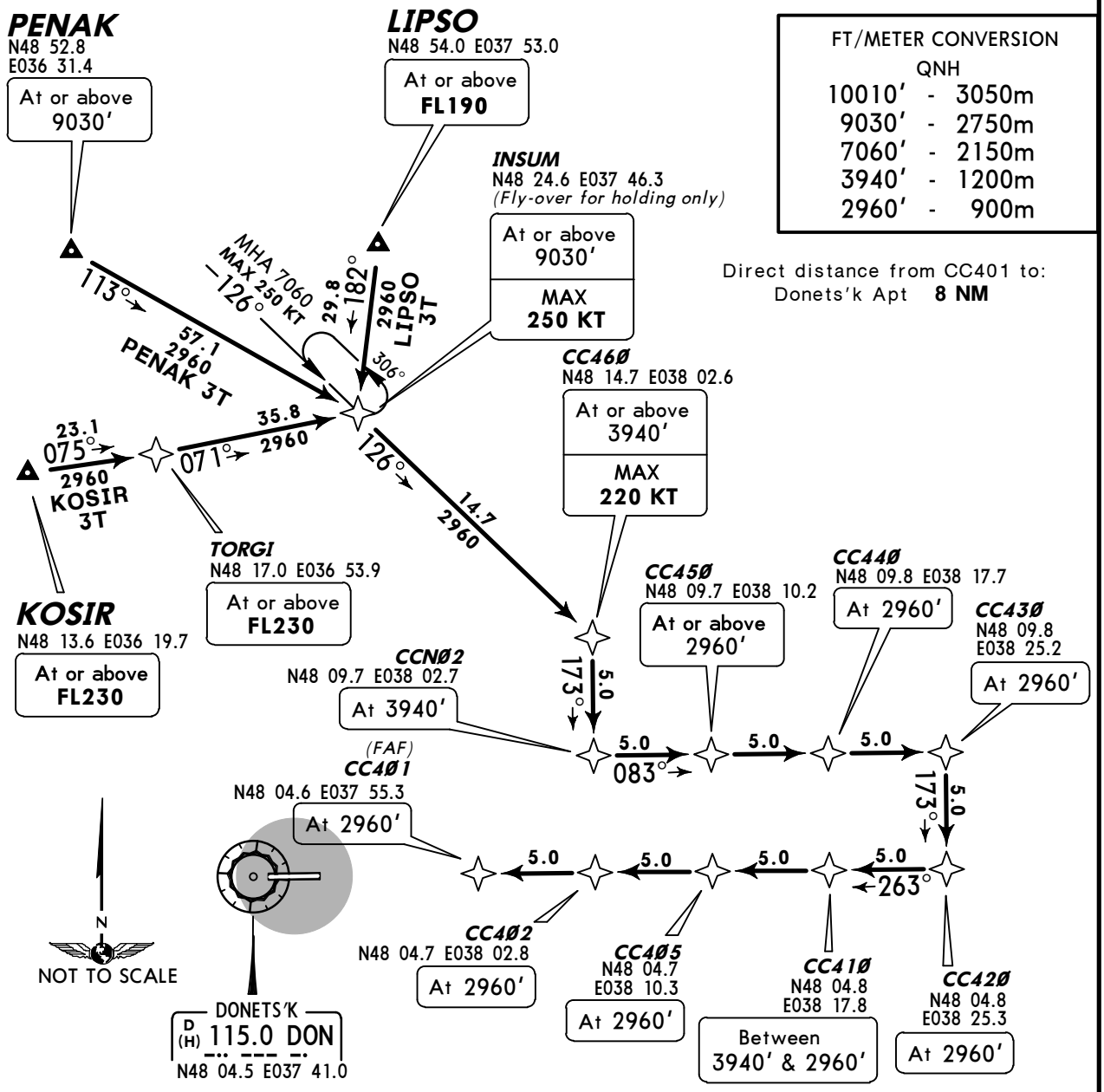


FT/METER CONVERSION
QNH

| | | |
|---|---|---|
| 10010' | - | 3050m |
| 9030' | - | 2750m |
| 7060' | - | 2150m |
| 3940' | - | 1200m |
| 2960' | - | 900m |

Direct distance from CC401 to:
Donets'k Apt **8 NM**

| TRANSITION | ROUTING |
|---|---|
| | |
| **KOSIR 3T** | KOSIR (FL230+) - TORGI (FL230+) - INSUM (9030'+; K250-). |
| **LIPSO 3T** | LIPSO(FL190+) - INSUM (9030'+; K250-). |
| **PENAK 3T** | PENAK (9030'+) - INSUM (9030'+; K250-). |

**ROUTING**

INSUM (9030'+; K250-) - CC460 (3940+; K220-) - CCN02 (3940') - CC450 (2960'+) - CC440 (2960') - CC430 (2960') - CC420 (2960') - CC410 (3940-; 2960'+) - CC405 (2960') - CC402 (2960') - CC401 (2960').

*CHANGES:* RNAV sensor.

© JEPPESEN, 2012, 2013. ALL RIGHTS RESERVED.

| Apt Elev | Trans level: By ATC Trans alt: 10010' |
|---|---|
| 783' | |

# ABOLA ONE PAPA (ABOLA 1P) [ABOL1P]
# LIPSO THREE PAPA (LIPSO 3P) [LIPS3P]
# PEMES ONE PAPA (PEMES 1P) [PEME1P]
# PETOG TWO PAPA (PETOG 2P) [PETO2P]
## RWY 08 RNAV DEPARTURES

RNAV (GNSS)

RNAV 1 (P-RNAV) APPROVAL REQUIRED
OTHERWISE ADVISE ATC

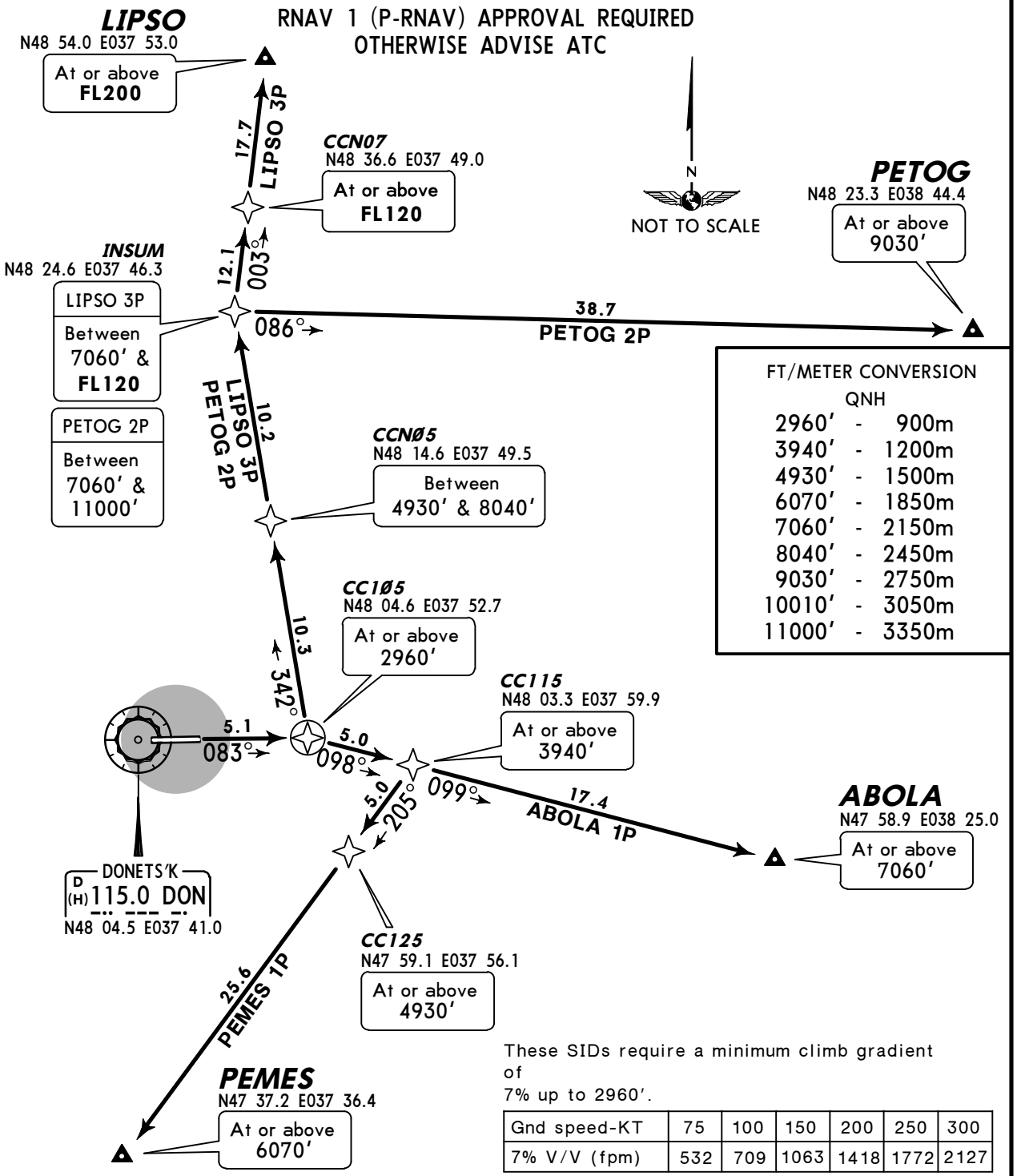


FT/METER CONVERSION
QNH

| | | |
|---|---|---|
| 2960' | - | 900m |
| 3940' | - | 1200m |
| 4930' | - | 1500m |
| 6070' | - | 1850m |
| 7060' | - | 2150m |
| 8040' | - | 2450m |
| 9030' | - | 2750m |
| 10010' | - | 3050m |
| 11000' | - | 3350m |

These SIDs require a minimum climb gradient of
7% up to 2960'.

| Gnd speed-KT | 75 | 100 | 150 | 200 | 250 | 300 |
|---|---|---|---|---|---|---|
| 7% V/V (fpm) | 532 | 709 | 1063 | 1418 | 1772 | 2127 |

If unable to comply advise ATC.

| SID | ROUTING |
|---|---|
| ABOLA 1P | CC105 (2960'+) - CC115 (3940'+) - ABOLA (7060'+). |
| LIPSO 3P | CC105 (2960'+) - CCN05 (4930'+; 8040'-) - INSUM (7060'+; FL120-) - CCN07 (FL120+) - LIPSO (FL200+). |
| PEMES 1P | CC105 (2960'+) - CC115 (3940'+) - CC125 (4930'+) - PEMES (6070'+). |
| PETOG 2P | CC105 (2960'+) - CCN05 (4930'+; 8040'-) - INSUM (7060'+; 11000'-) - PETOG (9030'+). |

*CHANGES:* RNAV sensor.

© JEPPESEN, 2011, 2013. ALL RIGHTS RESERVED.

| Apt Elev | Trans level: By ATC Trans alt: 10010' |
|---|---|
| 783' | |

# ABOLA ONE SIERRA (ABOLA 1S) *[ABOL1S]*
# LIPSO THREE SIERRA (LIPSO 3S) *[LIPS3S]*
# PEMES ONE SIERRA (PEMES 1S) *[PEME1S]*
# PETOG ONE SIERRA (PETOG 1S) *[PETO1S]*
## RWY 26 RNAV DEPARTURES

RNAV (GNSS)
RNAV 1 (P-RNAV) APPROVAL REQUIRED
OTHERWISE ADVISE ATC

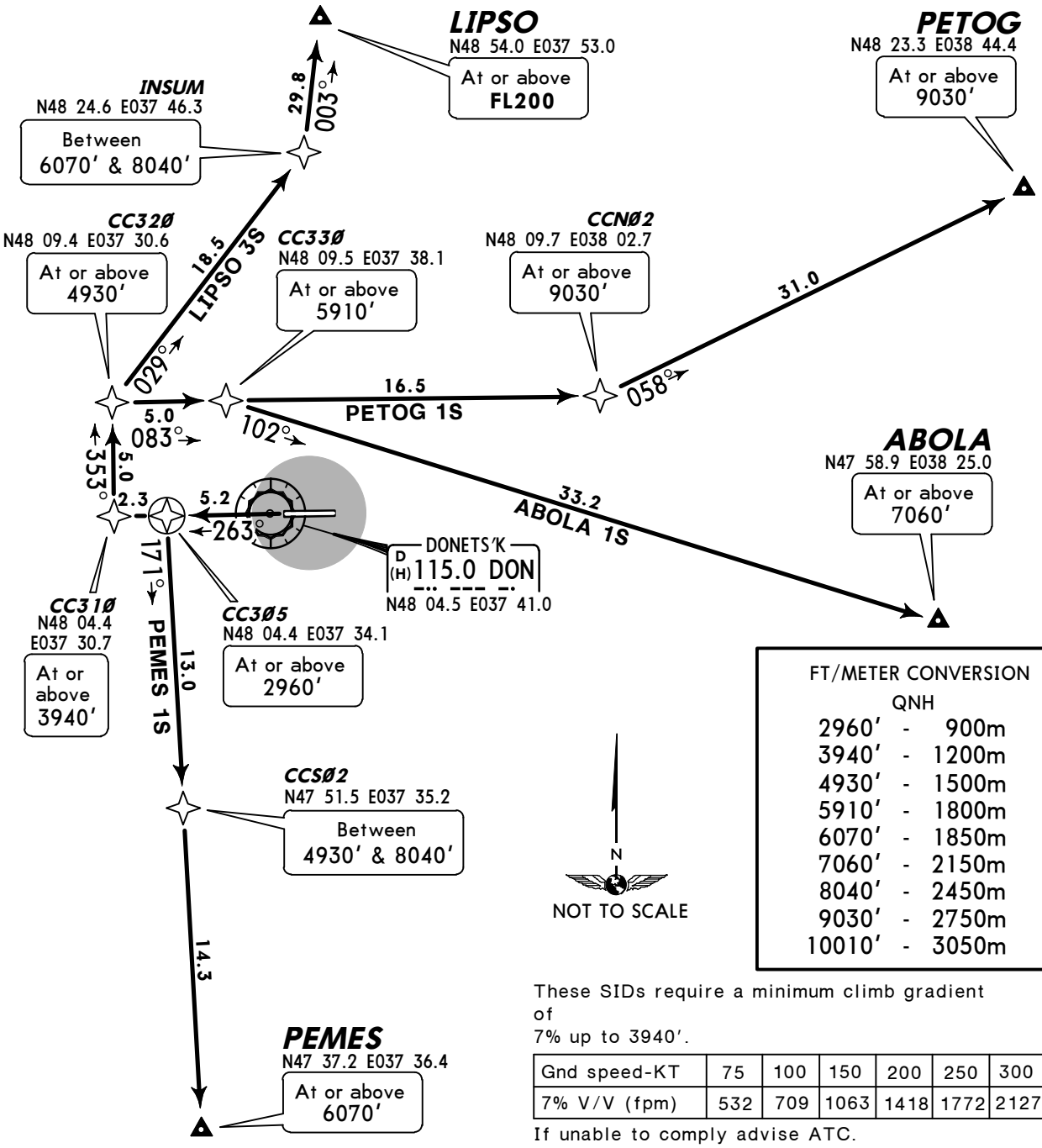


FT/METER CONVERSION
QNH

| | | |
|---|---|---|
| 2960' | - | 900m |
| 3940' | - | 1200m |
| 4930' | - | 1500m |
| 5910' | - | 1800m |
| 6070' | - | 1850m |
| 7060' | - | 2150m |
| 8040' | - | 2450m |
| 9030' | - | 2750m |
| 10010' | - | 3050m |

These SIDs require a minimum climb gradient of
7% up to 3940'.

| Gnd speed-KT | 75 | 100 | 150 | 200 | 250 | 300 |
|---|---|---|---|---|---|---|
| 7% V/V (fpm) | 532 | 709 | 1063 | 1418 | 1772 | 2127 |

If unable to comply advise ATC.

| SID | ROUTING |
|---|---|
| **ABOLA 1S** | CC305 (2960'+) - CC310 (3940'+) - CC320 (4930'+) - CC330 (5910'+) - ABOLA (7060'+). |
| **LIPSO 3S** | CC305 (2960'+) - CC310 (3940'+) - CC320 (4930'+) - INSUM (6070'+; 8040'-) - LIPSO (FL200+). |
| **PEMES 1S** | CC305 (2960'+) - CCS02 (4930'+; 8040'-) - PEMES (6070'+). |
| **PETOG 1S** | CC305 (2960'+) - CC310 (3940'+) - CC320 (4930'+) - CC330 (5910'+) - CCN02 (9030'+) - PETOG (9030'+). |

*CHANGES:* RNAV sensor.

© JEPPESEN, 2011, 2013. ALL RIGHTS RESERVED.

| Apt Elev | Trans level: By ATC  Trans alt: 10010' |
|---|---|
| 783' | |

3000'
MSA
DON VOR

# KOSIR ONE PAPA (KOSIR 1P) *[KOSI1P]*
# MAKAK ONE PAPA (MAKAK 1P) *[MAKA1P]*
# PENAK TWO PAPA (PENAK 2P) *[PENA2P]*
# TAGAN TWO PAPA (TAGAN 2P) *[TAGA2P]*
## RWY 08 RNAV DEPARTURES

RNAV (GNSS)
RNAV 1 (P-RNAV) APPROVAL REQUIRED
OTHERWISE ADVISE ATC

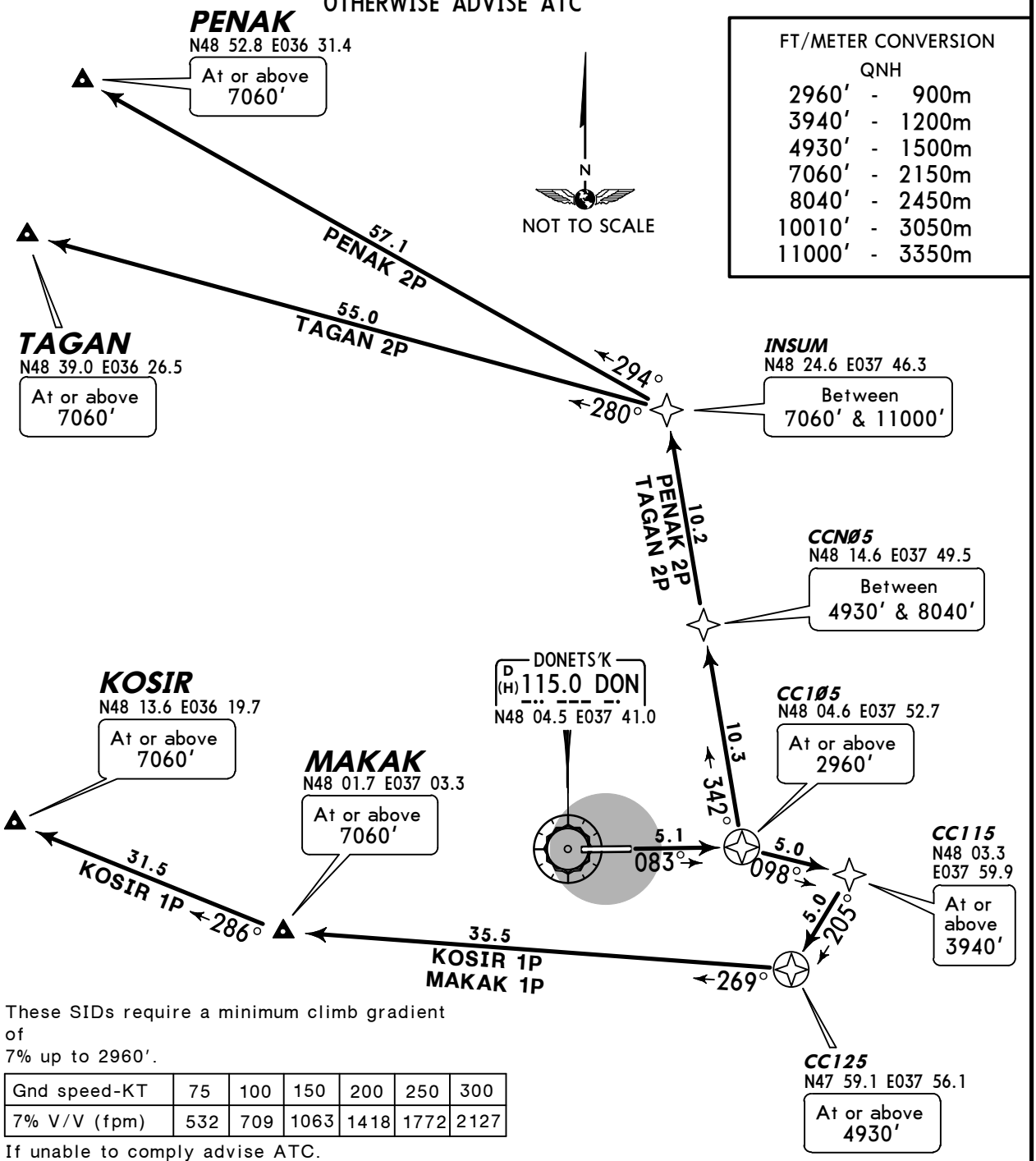


| FT/METER CONVERSION | | |
|---|---|---|
| QNH | | |
| 2960' | - | 900m |
| 3940' | - | 1200m |
| 4930' | - | 1500m |
| 7060' | - | 2150m |
| 8040' | - | 2450m |
| 10010' | - | 3050m |
| 11000' | - | 3350m |

These SIDs require a minimum climb gradient of
7% up to 2960'.

| Gnd speed-KT | 75 | 100 | 150 | 200 | 250 | 300 |
|---|---|---|---|---|---|---|
| 7% V/V (fpm) | 532 | 709 | 1063 | 1418 | 1772 | 2127 |

If unable to comply advise ATC.

| SID | ROUTING |
|---|---|
| **KOSIR 1P** | CC105 (2960'+) - CC115 (3940'+) - CC125 (4930'+) - MAKAK (7060'+) - KOSIR (7060'+). |
| **MAKAK 1P** | CC105 (2960'+) - CC115 (3940'+) - CC125 (4930'+) - MAKAK (7060'+). |
| **PENAK 2P** | CC105 (2960'+) - CCN05 (4930'+; 8040'-) - INSUM (7060'+; 11000'-) - PENAK (7060'+). |
| **TAGAN 2P** | CC105 (2960'+) - CCN05 (4930'+; 8040'-) - INSUM (7060'+; 11000'-) - TAGAN (7060'+). |

*CHANGES:* RNAV sensor.

© JEPPESEN, 2011, 2013. ALL RIGHTS RESERVED.

| Apt Elev | Trans level: By ATC Trans alt: 10010' |
|---|---|
| 783' | |

3000'
MSA
DON VOR

# KOSIR ONE SIERRA (KOSIR 1S) *[KOSI1S]*
# MAKAK ONE SIERRA (MAKAK 1S) *[MAKA1S]*
# PENAK ONE SIERRA (PENAK 1S) *[PENA1S]*
# TAGAN ONE SIERRA (TAGAN 1S) *[TAGA1S]*
## RWY 26 RNAV DEPARTURES

RNAV (GNSS)
RNAV 1 (P-RNAV) APPROVAL REQUIRED
OTHERWISE ADVISE ATC

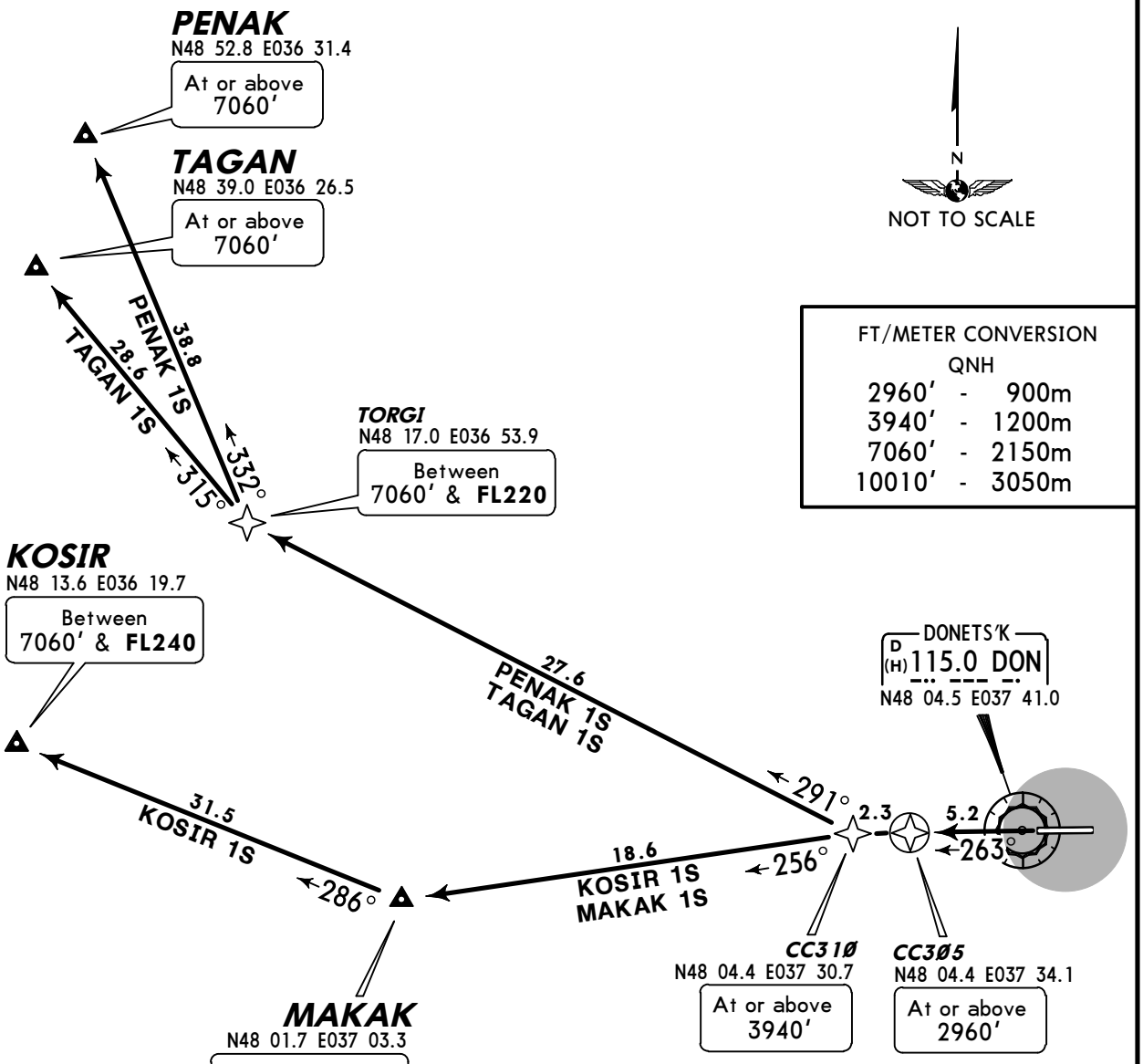


N
NOT TO SCALE

FT/METER CONVERSION
QNH

| | | |
|---|---|---|
| 2960' | - | 900m |
| 3940' | - | 1200m |
| 7060' | - | 2150m |
| 10010' | - | 3050m |

These SIDs require a minimum climb gradient of
7% up to 3940'.

| Gnd speed-KT | 75 | 100 | 150 | 200 | 250 | 300 |
|---|---|---|---|---|---|---|
| 7% V/V (fpm) | 532 | 709 | 1063 | 1418 | 1772 | 2127 |

If unable to comply advise ATC.

| SID | ROUTING |
|---|---|
| KOSIR 1S | CC305 (2960'+) - CC310 (3940'+) - MAKAK (7060'+; FL240-) - KOSIR (7060'+; FL240-). |
| MAKAK 1S | CC305 (2960'+) - CC310 (3940'+) - MAKAK (7060'+). |
| PENAK 1S | CC305 (2960'+) - CC310 (3940'+) - TORGI (7060'+; FL220-) - PENAK (7060'+). |
| TAGAN 1S | CC305 (2960'+) - CC310 (3940'+) - TORGI (7060'+; FL220-) - TAGAN (7060'+). |

*CHANGES:* RNAV sensor.

© JEPPESEN, 2011, 2013. ALL RIGHTS RESERVED.

| Apt Elev 783′ | Trans level: By ATC Trans alt: 10010′ |
|---|---|

3000′
MSA
DON VOR

# ABOLA ONE KILO (ABOLA 1K) [ABOL1K]
# LIPSO TWO KILO (LIPSO 2K) [LIPS2K]
# PEMES ONE KILO (PEMES 1K) [PEME1K]
# PETOG ONE KILO (PETOG 1K) [PETO1K]
## RWY 08 DEPARTURES

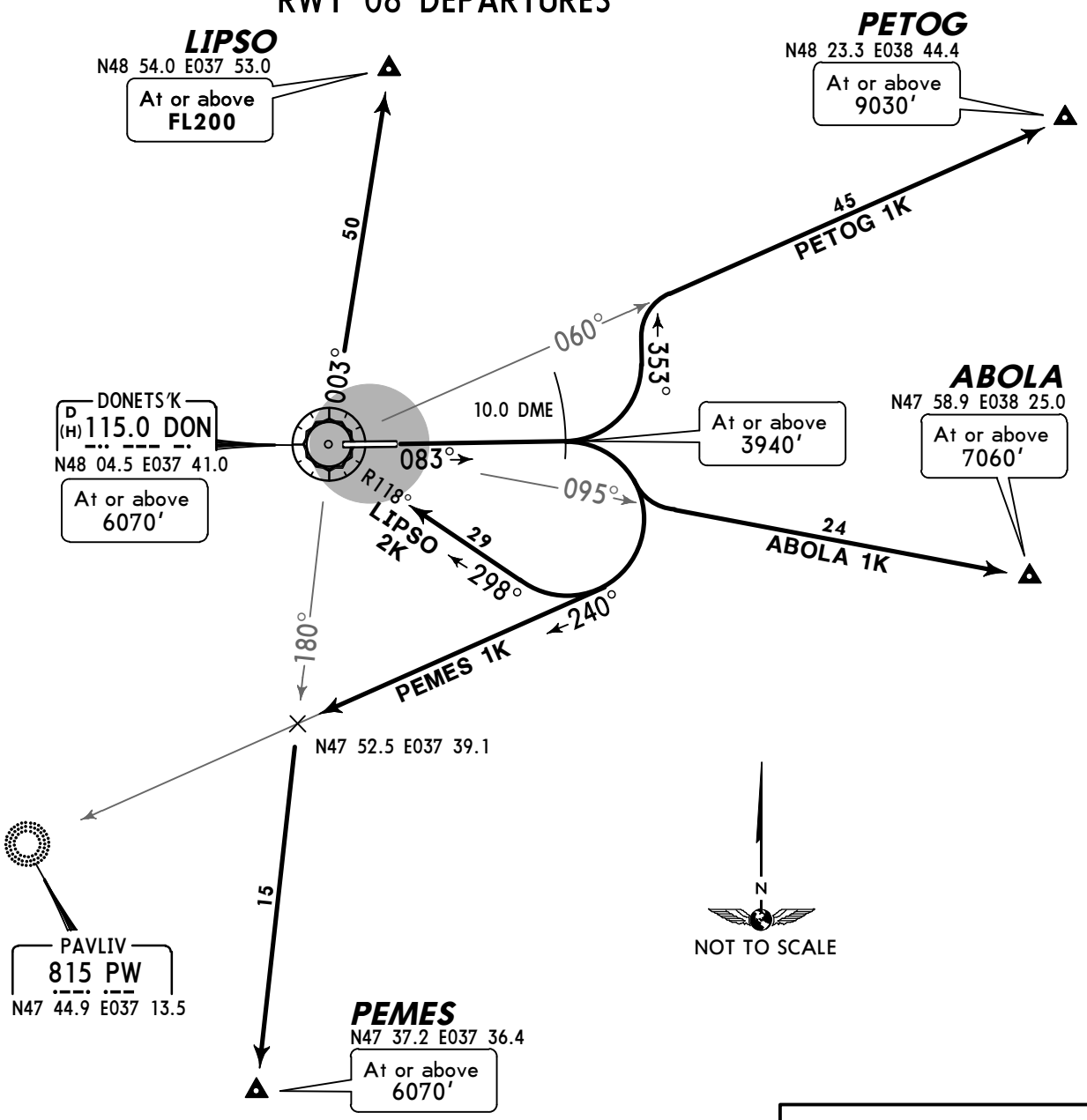


These SIDs require a minimum climb gradient of
7% up to 3940′.

| Gnd speed-KT | 75 | 100 | 150 | 200 | 250 | 300 |
|---|---|---|---|---|---|---|
| 7% V/V (fpm) | 532 | 709 | 1063 | 1418 | 1772 | 2127 |

If unable to comply advise ATC.

FT/METER CONVERSION
QNH

| | | |
|---|---|---|
| 3940′ | - | 1200m |
| 6070′ | - | 1850m |
| 7060′ | - | 2150m |
| 9030′ | - | 2750m |
| 10010′ | - | 3050m |

| SID | ROUTING |
|---|---|
| **ABOLA 1K** | Climb on 083° track to at or above 3940′ at DON 10.0 DME, turn RIGHT, intercept DON R-095 to ABOLA. |
| **LIPSO 2K** | Climb on 083° track to at or above 3940′ at DON 10.0 DME, turn RIGHT, intercept DON R-118 inbound to DON, turn RIGHT, DON R-003 to LIPSO. |
| **PEMES 1K** | Climb on 083° track to at or above 3940′ at DON 10.0 DME, turn RIGHT, intercept 240° bearing towards PW, intercept DON R-180 to PEMES. |
| **PETOG 1K** | Climb on 083° track to at or above 3940′ at DON 10.0 DME, turn LEFT, 353° track, intercept DON R-060 to PETOG. |

*CHANGES:* SID LIPSO 1K renumbered 2K & revised.

© JEPPESEN, 2011, 2012. ALL RIGHTS RESERVED.

| Apt Elev 783′ | Trans level: By ATC Trans alt: 10010′ |
|---|---|

3000′
MSA
DON VOR

# ABOLA ONE MIKE (ABOLA 1M) [ABOL1M]
# LIPSO TWO MIKE (LIPSO 2M) [LIPS2M]
# PEMES ONE MIKE (PEMES 1M) [PEME1M]
# PETOG ONE MIKE (PETOG 1M) [PETO1M]
# RWY 26 DEPARTURES

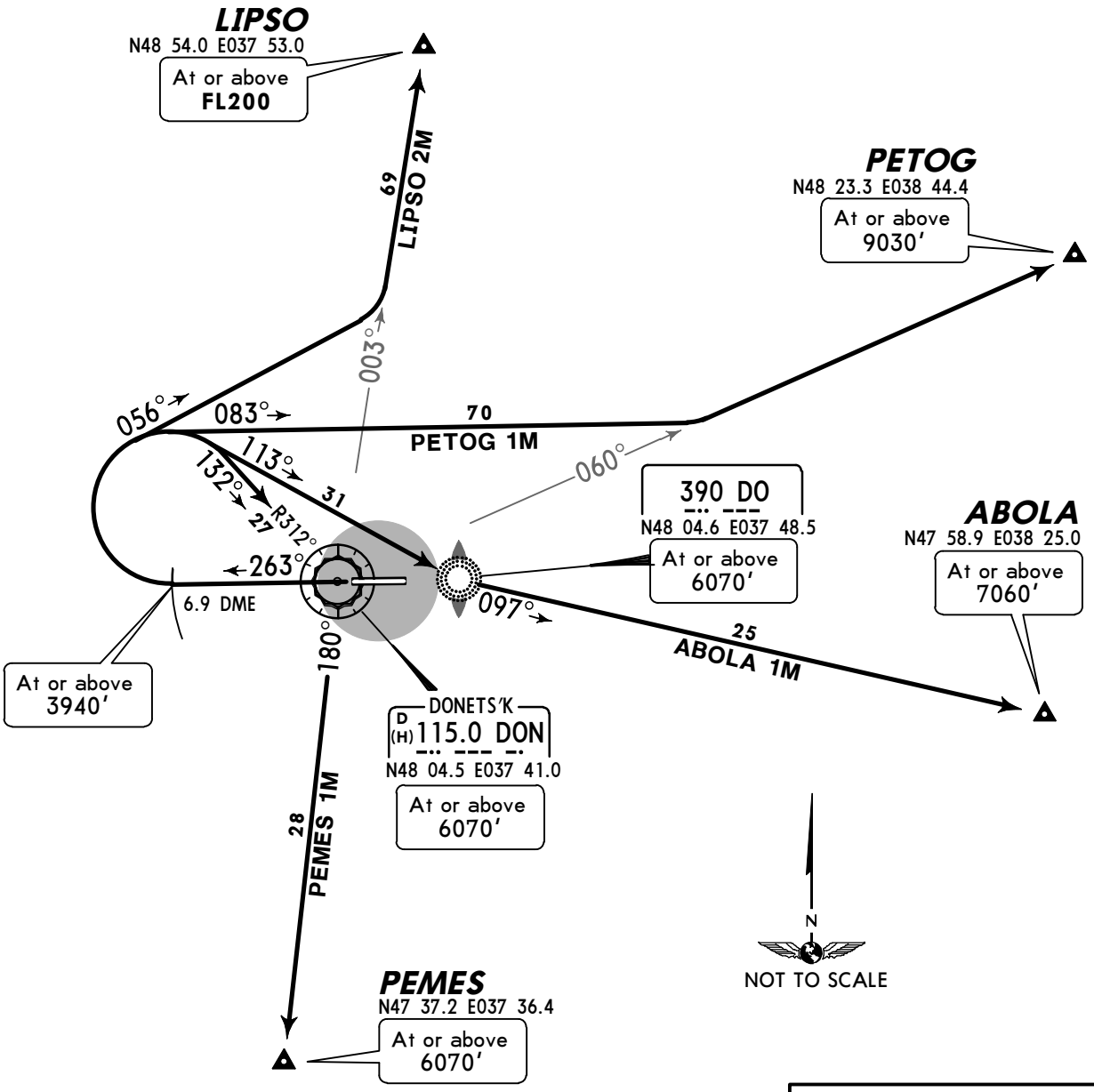


These SIDs require a minimum climb gradient of
7% up to 3940′.

| Gnd speed-KT | 75 | 100 | 150 | 200 | 250 | 300 |
|---|---|---|---|---|---|---|
| 7% V/V (fpm) | 532 | 709 | 1063 | 1418 | 1772 | 2127 |

If unable to comply advise ATC.

FT/METER CONVERSION
QNH

| | | |
|---|---|---|
| 3940′ | - | 1200m |
| 6070′ | - | 1850m |
| 7060′ | - | 2150m |
| 9030′ | - | 2750m |
| 10010′ | - | 3050m |

| SID | ROUTING |
|---|---|
| **ABOLA 1M** | Climb on 263° track to at or above 3940′ at DON 6.9 DME, turn RIGHT, intercept 113° bearing to DO, turn LEFT, 097° bearing to ABOLA. |
| **LIPSO 2M** | Climb on 263° track to at or above 3940′ at DON 6.9 DME, turn RIGHT, 056° track, intercept DON R-003 to LIPSO. |
| **PEMES 1M** | Climb on 263° track to at or above 3940′ at DON 6.9 DME, turn RIGHT, intercept DON R-312 inbound to DON, turn RIGHT, DON R-180 to PEMES. |
| **PETOG 1M** | Climb on 263° track to at or above 3940′ at DON 6.9 DME, turn RIGHT, 083° track, intercept DON R-060 to PETOG. |

*CHANGES:* SID LIPSO 1M renumbered 2M & revised.

© JEPPESEN, 2011, 2012. ALL RIGHTS RESERVED.

| Apt Elev 783′ | Trans level: By ATC Trans alt: 10010′ |
|---|---|

# KOSIR ONE KILO (KOSIR 1K) *[KOSI1K]*
# MAKAK ONE KILO (MAKAK 1K) *[MAKA1K]*
# PENAK TWO KILO (PENAK 2K) *[PENA2K]*
# TAGAN TWO KILO (TAGAN 2K) *[TAGA2K]*
# RWY 08 DEPARTURES

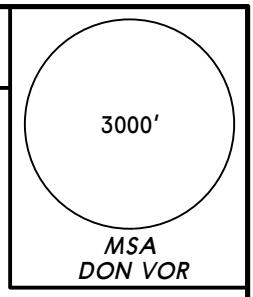


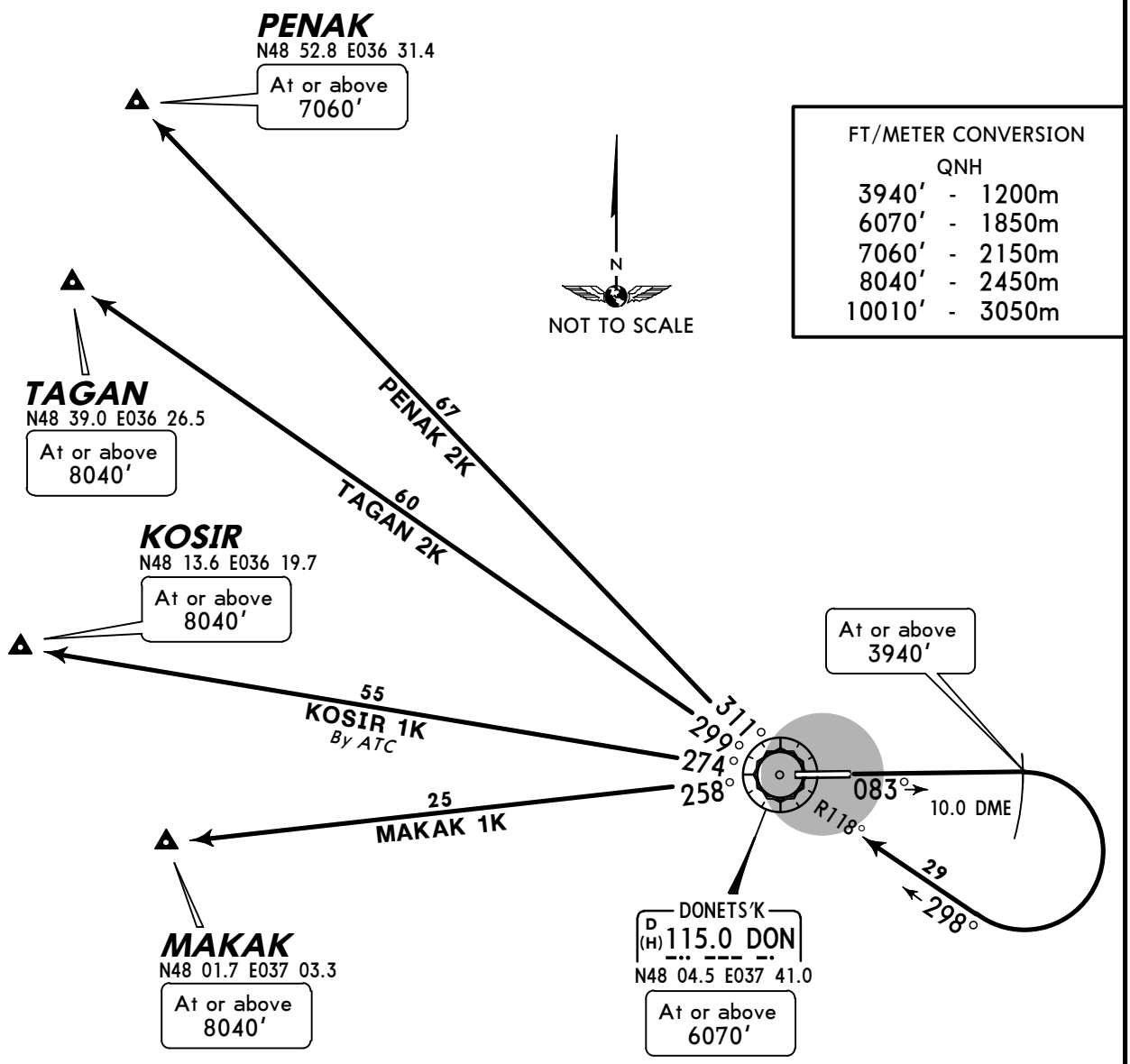


| FT/METER CONVERSION QNH | | |
|---|---|---|
| 3940′ | - | 1200m |
| 6070′ | - | 1850m |
| 7060′ | - | 2150m |
| 8040′ | - | 2450m |
| 10010′ | - | 3050m |

These SIDs require a minimum climb gradient of
7% up to 3940′.

| Gnd speed-KT | 75 | 100 | 150 | 200 | 250 | 300 |
|---|---|---|---|---|---|---|
| 7% V/V (fpm) | 532 | 709 | 1063 | 1418 | 1772 | 2127 |

If unable to comply advise ATC.

| SID | ROUTING |
|---|---|
| **KOSIR 1K** *By ATC* | Climb on 083° track to at or above 3940′ at DON 10.0 DME, turn RIGHT, intercept DON R-118 inbound to DON, turn LEFT, DON R-274 to KOSIR. |
| **MAKAK 1K** | Climb on 083° track to at or above 3940′ at DON 10.0 DME, turn RIGHT, intercept DON R-118 inbound to DON, turn LEFT, DON R-258 to MAKAK. |
| **PENAK 2K** | Climb on 083° track to at or above 3940′ at DON 10.0 DME, turn RIGHT, intercept DON R-118 inbound to DON, turn RIGHT, DON R-311 to PENAK. |
| **TAGAN 2K** | Climb on 083° track to at or above 3940′ at DON 10.0 DME, turn RIGHT, intercept DON R-118 inbound to DON, turn RIGHT, DON R-299 to TAGAN. |

*CHANGES:* Crossing altitude at TAGAN revised.

© JEPPESEN, 2011, 2012. ALL RIGHTS RESERVED.

| Apt Elev 783′ | Trans level: By ATC Trans alt: 10010′ |
|---|---|

# KOSIR ONE MIKE (KOSIR 1M) *[KOSI1M]*
# MAKAK ONE MIKE (MAKAK 1M) *[MAKA1M]*
# PENAK TWO MIKE (PENAK 2M) *[PENA2M]*
# TAGAN TWO MIKE (TAGAN 2M) *[TAGA2M]*
# RWY 26 DEPARTURES

3000′
*MSA DON VOR*

FT/METER CONVERSION
QNH

| | | |
|---|---|---|
| 3940′ | - | 1200m |
| 7060′ | - | 2150m |
| 8040′ | - | 2450m |
| 10010′ | - | 3050m |

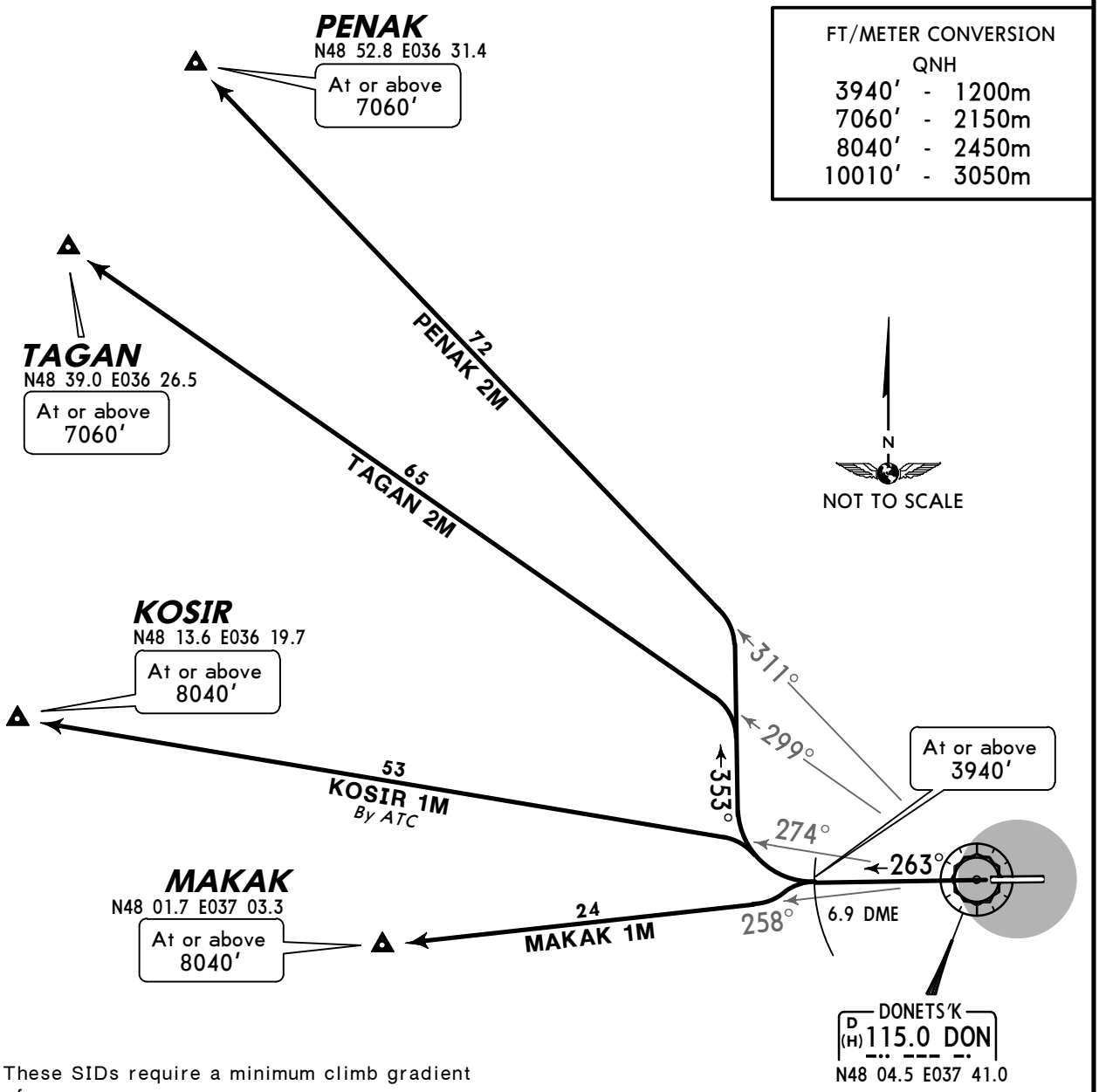


These SIDs require a minimum climb gradient of
7% up to 3940′.

| Gnd speed-KT | 75 | 100 | 150 | 200 | 250 | 300 |
|---|---|---|---|---|---|---|
| 7% V/V (fpm) | 532 | 709 | 1063 | 1418 | 1772 | 2127 |

If unable to comply advise ATC.

| SID | ROUTING |
|---|---|
| **KOSIR 1M** *By ATC* | Climb on 263° track to at or above 3940′ at DON 6.9 DME, turn RIGHT, intercept DON R-274 to KOSIR. |
| **MAKAK 1M** | Climb on 263° track to at or above 3940′ at DON 6.9 DME, turn LEFT, intercept DON R-258 to MAKAK. |
| **PENAK 2M** | Climb on 263° track to at or above 3940′ at DON 6.9 DME, turn RIGHT, 353° track, intercept DON R-311 to PENAK. |
| **TAGAN 2M** | Climb on 263° track to at or above 3940′ at DON 6.9 DME, turn RIGHT, 353° track, intercept DON R-299 to TAGAN. |

*CHANGES:* None.

© JEPPESEN, 2011, 2012. ALL RIGHTS RESERVED.

# NOISE ABATEMENT

## GENERAL

Strict adherence to established schemes of SID/STARs.

## DEPARTURES

While taking-off from RWY 08 and departing SOUTH the crosswind leg turn executed on height at or above 3940'.

**TAKE-OFF RESTRICTIONS RWY 08/26:**

| | |
|---|---|
| Take-off to 1590' | - maintain take-off power of all engines,<br>- take-off flaps,<br>- $V_2$ + 10 KT. |
| Between 1590' - 3790' | - correct and maintain engine's capacity according to schedule power control in order to noise abatement, which is given in Flight Operation Manual. Maintain rate of climb $V_2$ + (10+20 KT) and take-off flaps and slats position. |
| At 3790' | - Maintain a positive rate of climb, perform acceleration and retract flaps and slats according to schedule and at make acceleration to rate of climb to enroute flight. |

© JEPPESEN, 2012. ALL RIGHTS RESERVED.

| ATIS | DONETS'K Ground | Tower |
|---|---|---|
| 130.9 (Russian 121.3) | 119.0 | 118.3 |

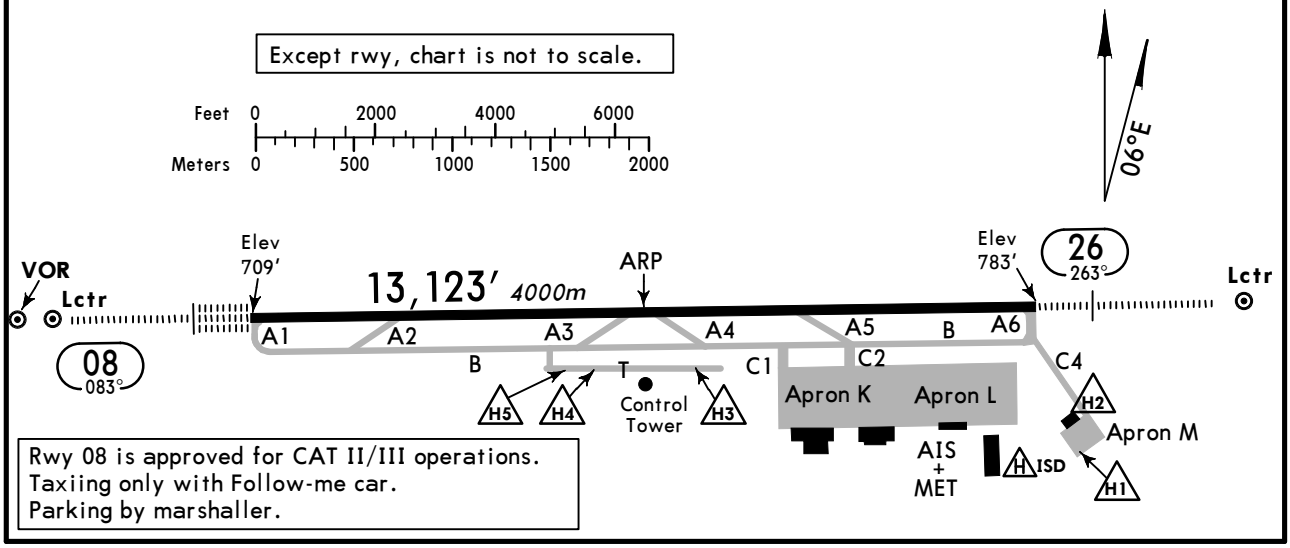


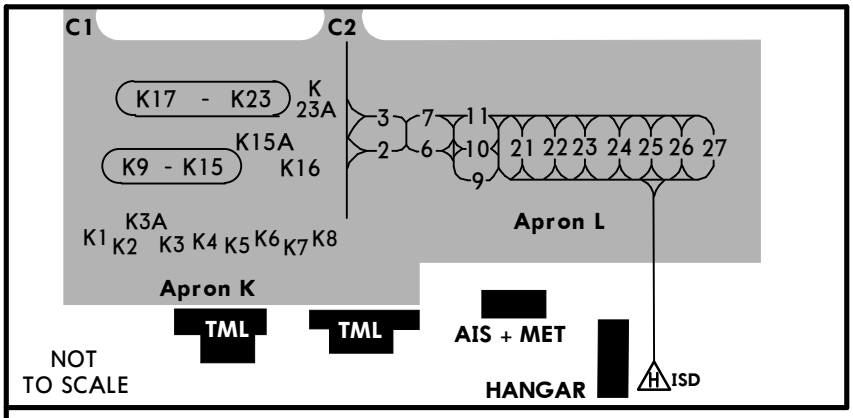


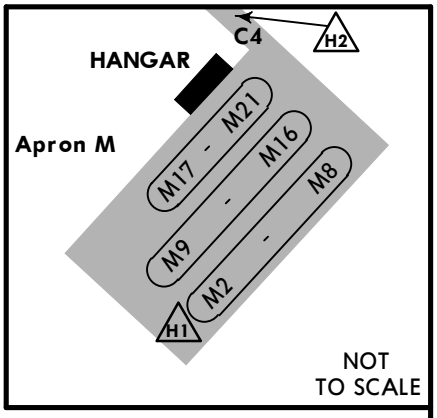


ADDITIONAL RUNWAY INFORMATION

| RWY | | USABLE LENGTHS LANDING BEYOND Threshold | Glide Slope | TAKE-OFF | WIDTH |
|---|---|---|---|---|---|
| 08 | HIRL *(60m)* CL *(15m)* HIALS-II TDZ ❶ RVR | | 12,151′ *3704m* | ❷ | 197′ *60m* |
| 26 | HIRL *(60m)* CL *(15m)* HIALS ❶ RVR | | 12,029′ *3666m* | | |

❶ PAPI-L (3.0°)

❷ TAKE-OFF RUN AVAILABLE

RWY 08:

| | |
|---|---|
| From rwy head | 13,123′ (4000m) |
| twy A2 int | 9843′ (3000m) |
| twy A3 int | 6562′ (2000m) |

RWY 26:

| | |
|---|---|
| From rwy head | 13,123′ (4000m) |
| twy A5 int | 9843′ (3000m) |
| twy A4 int | 6562′ (2000m) |

## LOW VISIBILITY PROCEDURE (LVP)

LVP shall be applied when TDZ, MID or END RVR is less than 600m and/or cloud base is below 98′/30m.
Pilots will be informed by ATC about beginning of LVP.
- After landing pilots should report 'RWY vacated'.
- Taxiing and parking is performed with follow-me car.
- Taxiing on TWY and apron is permitted only for one aircraft at a time.

**JAR-OPS**

TAKE-OFF ❶

| | All Rwys LVP must be in force | | | |
|---|---|---|---|---|
| | RL, CL & mult. RVR req | RL & CL | RCLM (DAY only) or RL | NIL (DAY only) |
| A | *150m* | *200m* | *250m* | *500m* |
| B | | | | |
| C | | | | |
| D | *200m* | *250m* | *300m* | |

❶ Operators applying U.S. Ops Specs: CL required below 300m.

*CHANGES:* Apron. Stands. TORA.

© JEPPESEN, 1998, 2013. ALL RIGHTS RESERVED.

| STRAIGHT-IN RWY | | A | B | C | D |
|---|---|---|---|---|---|
| 08 | CAT 3A ILS | **RA50′ R200m** | **RA50′ R200m** | **RA50′ R200m** | **RA50′ R200m** |
| | CAT 2 ILS | **809′**(100′)<br>**RA107′R300m** | **809′**(100′)<br>**RA107′R300m** | **809′**(100′)<br>**RA107′R300m** | **809′**(100′)<br>**RA107′R300m** |
| | ILS<br>*FULL*<br>*Limited*<br>*ALS out* | **909′**(200′)<br>**R550m**<br>R750m<br>R1200m | **909′**(200′)<br>**R550m**<br>R750m<br>R1200m | **909′**(200′)<br>**R550m**<br>R750m<br>R1200m | **909′**(200′)<br>**R550m**<br>R750m<br>R1200m |
| | LOC | NOT<br>AUTH | NOT<br>AUTH | NOT<br>AUTH | NOT<br>AUTH |
| | VOR ❶<br><br>*ALS out* | **1170′**(461′)<br>**R1500m**<br>R1500m | **1170′**(461′)<br>**R1500m**<br>R1500m | **1170′**(461′)<br>**R1500m**<br>C2200m | **1170′**(461′)<br>**R1500m**<br>C2200m |
| | NDB ❶❷<br><br>*ALS out* | **1170′**(461′)<br>**R1500m**<br>R1500m | **1170′**(461′)<br>**R1500m**<br>R1500m | **1170′**(461′)<br>**R1500m**<br>C2200m | **1170′**(461′)<br>**R1500m**<br>C2200m |
| | NDB ❸<br><br>*ALS out* | **1220′**(511′)<br>**R1800m**<br>C2600m | **1220′**(511′)<br>**R1800m**<br>C2600m | **1220′**(511′)<br>**R2000m**<br>C2800m | **1220′**(511′)<br>**R2000m**<br>C2800m |
| 26 | ILS<br>*FULL*<br>*Limited*<br>*ALS out* | **983′**(200′)<br>**R550m**<br>R750m<br>R1200m | **983′**(200′)<br>**R550m**<br>R750m<br>R1200m | **983′**(200′)<br>**R550m**<br>R750m<br>R1200m | **983′**(200′)<br>**R550m**<br>R750m<br>R1200m |
| | LOC | NOT<br>AUTH | NOT<br>AUTH | NOT<br>AUTH | NOT<br>AUTH |
| | VOR ❶❹<br><br>*ALS out* | **1220′**(437′)<br>**R1300m**<br>R1500m | **1220′**(437′)<br>**R1300m**<br>R1500m | **1220′**(437′)<br>**R1300m**<br>R2000m | **1220′**(437′)<br>**R1300m**<br>R2000m |
| | VOR ❶❺<br><br>*ALS out* | **1420′**(637′)<br>**R1500m**<br>R1500m | **1420′**(637′)<br>**R1500m**<br>R1500m | **1420′**(637′)<br>**C2200m**<br>C2400m | **1420′**(637′)<br>**C2200m**<br>C2400m |
| | 2 NDB ❶<br><br>*ALS out* | **1220′**(437′)<br>**R1300m**<br>R1500m | **1220′**(437′)<br>**R1300m**<br>R1500m | **1220′**(437′)<br>**R1300m**<br>R2000m | **1220′**(437′)<br>**R1300m**<br>R2000m |
| | O NDB ❶❷<br><br>*ALS out* | **1420′**(637′)<br>**R1500m**<br>R1500m | **1420′**(637′)<br>**R1500m**<br>R1500m | **1420′**(637′)<br>**C2200m**<br>C2400m | **1420′**(637′)<br>**C2200m**<br>C2400m |
| | O NDB ❸<br><br>*ALS out* | **1480′**(697′)<br>**C2700m**<br>C3400m | **1480′**(697′)<br>**C2700m**<br>C3400m | **1480′**(697′)<br>**C2900m**<br>C3600m | **1480′**(697′)<br>**C2900m**<br>C3600m |

❶ Continuous Descent Final Approach.
❷ with DME.
❸ w/o DME.
❹ with D5.0.
❺ w/o D5.0


© JEPPESEN, 2010, 2012. ALL RIGHTS RESERVED.

| CIRCLE-TO-LAND ❶ | 100 KT | 135 KT | 180 KT | 205 KT |
|---|---|---|---|---|
| After apch to rwy 08 ❷ | **1280**′(571′) | **1420**′(711′) | **1510**′(801′) | **1690**′(981′) |
| After ILS 26 | **1280**′(497′) | **1420**′(637′) | **1510**′(727′) | **1690**′(907′) |
| After VOR 26 | **1420**′(637′) | **1420**′(637′) | **1510**′(727′) | **1690**′(907′) |
| After NDB 26 | **1480**′(697′) | **1480**′(697′) | **1510**′(727′) | **1690**′(907′) |
| | V1500m | V1600m | V2400m | V3600m |

❶Not authorized South of airport btn R-110 & R-230 DON.
❷Circling height based on rwy 08 thresh elev of 709′.

## TAKE-OFF RWY 08, 26

**LVP must be in Force**

| | RL, CL & mult. RVR req | RL & CL | RCLM (DAY only) or RL | NIL (DAY only) |
|---|---|---|---|---|
| A, B, C | 150m | 200m | 250m | 500m |
| D | 200m | 250m | 300m | |


© JEPPESEN, 2010, 2012. ALL RIGHTS RESERVED.

BRIEFING STRIP

| ATIS | DONETS'K Approach Radar (APP) | DONETS'K Tower | Ground |
|---|---|---|---|
| 130.9 (Russian 121.3) | 134.0 | 118.3 | 119.0 |

| LOC IDN | Final Apch Crs | GS LOM | ILS DA(H) | Apt Elev / RWY |
|---|---|---|---|---|
| 109.3 | 083° | 1444' (735') | 909' (200') | 783' / 709' |

**MISSED APCH:** ❶ Climb on track 083° to 2960', then as directed.
**WITH COMM FAILURE:** ❷ Climb on track 083° to 3940', then turn LEFT to DN NDB, then according to chart.

Alt Set: hPa (MM on req) Rwy Elev: 27 hPa Trans level: by ATC Trans alt: 10010'

3000'
MSA DON VOR

FT/METER CONVERSION
QNH
10010' - 3050m
3940' - 1200m
2960' - 900m

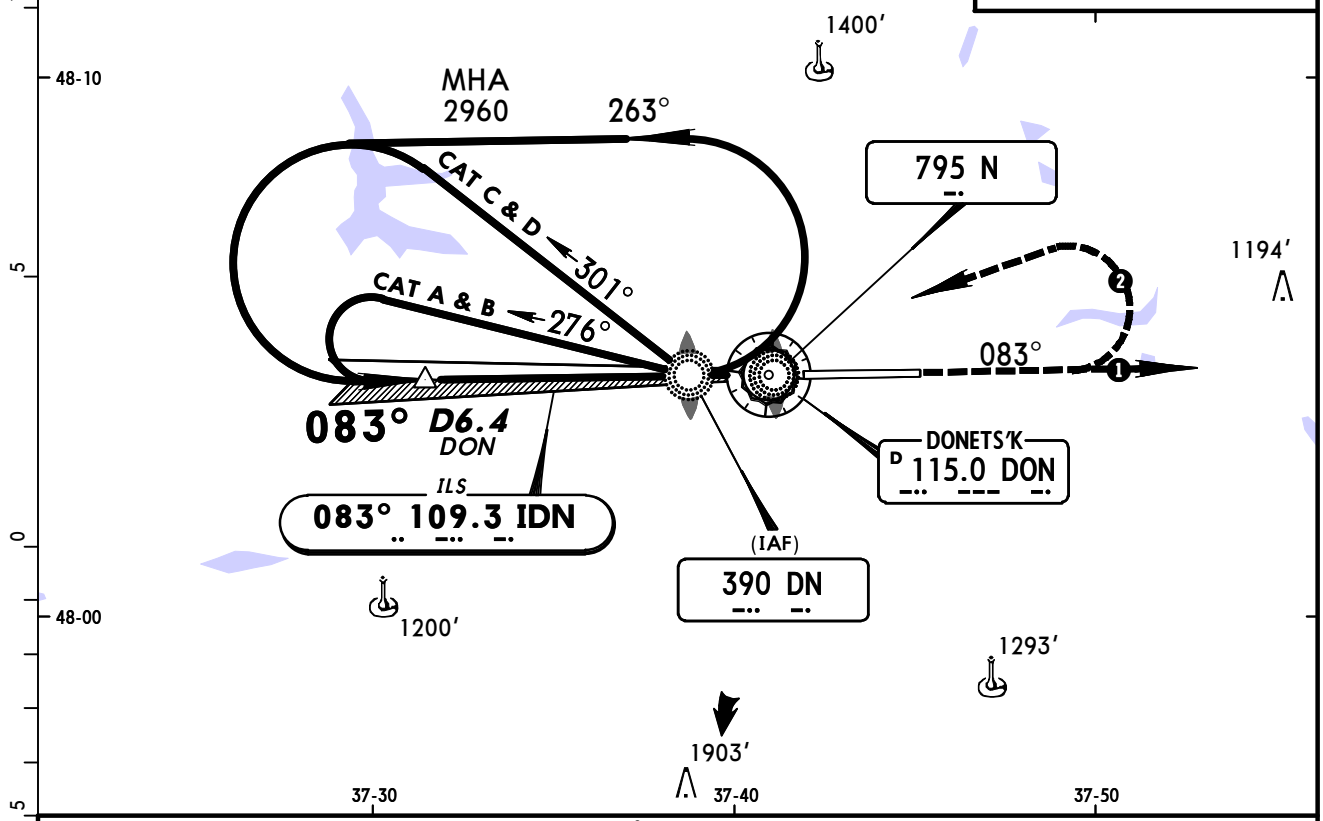


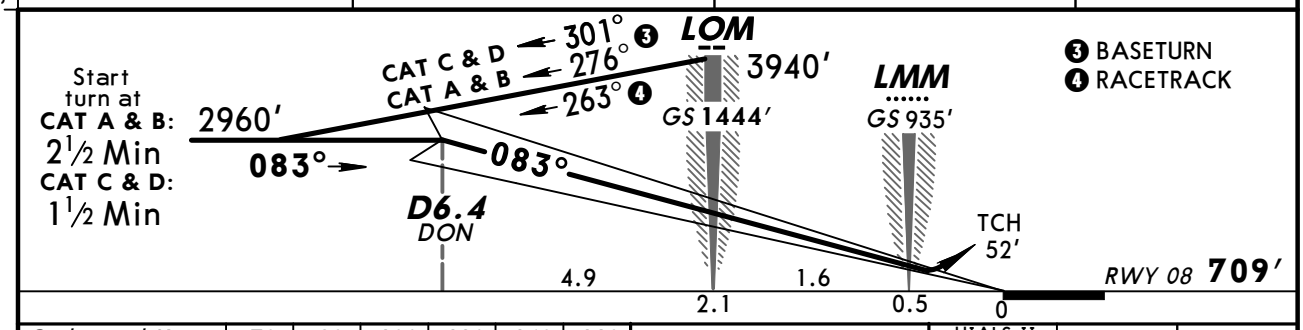


| Gnd speed-Kts | 70 | 90 | 100 | 120 | 140 | 160 |
|---|---|---|---|---|---|---|
| ILS GS 3.00° | 372 | 478 | 531 | 637 | 743 | 849 |

HIALS-II
PAPI
2960' on 083°

PANS OPS

**JAR-OPS** STRAIGHT-IN LANDING RWY 08

| | ILS DA(H) 909' (200') FULL | ILS DA(H) 909' (200') ALS out | LOC (GS out) |
|---|---|---|---|
| A | RVR 550m | RVR 1000m | NOT AUTHORIZED |
| B | | | |
| C | | | |
| D | | | |

CIRCLE-TO-LAND ❶
Not authorized South of airport btn R-110 DON & R-230 DON clockwise

| Max Kts | MDA(H) | VIS |
|---|---|---|
| 100 | 1280' (571') | 1500m |
| 135 | 1420' (711') | 1600m |
| 180 | 1510' (801') | 2400m |
| 205 | 1690' (981') | 3600m |

❶ Circling height based on rwy 08 thresh elevation of 709'.

*CHANGES:* Communications.

© JEPPESEN, 1999, 2012. ALL RIGHTS RESERVED.

| ATIS | DONETS'K Approach Radar (APP) | DONETS'K Tower | Ground |
|---|---|---|---|
| 130.9 (Russian 121.3) | 134.0 | 118.3 | 119.0 |

BRIEFING STRIP ™

| LOC IDN | Final Apch Crs | GS LOM | CAT II ILS RA 107′ DA(H) 809′(100′) | Apt Elev 783′ RWY 709′ |
|---|---|---|---|---|
| 109.3 | 083° | 1444′ (735′) | | |

**MISSED APCH:** ❶ Climb on track 083° to 2960′, then as directed.
**WITH COMM FAILURE:** ❷ Climb on track 083° to 3940′, then turn LEFT to DN NDB, then according to chart.

Alt Set: hPa (MM on req) Rwy Elev: 27 hPa Trans level: by ATC Trans alt: 10010′
Special Aircrew and Aircraft Certification Required.

3000′
MSA DON VOR

FT/METER CONVERSION
QNH
10010′ - 3050m
3940′ - 1200m
2960′ - 900m

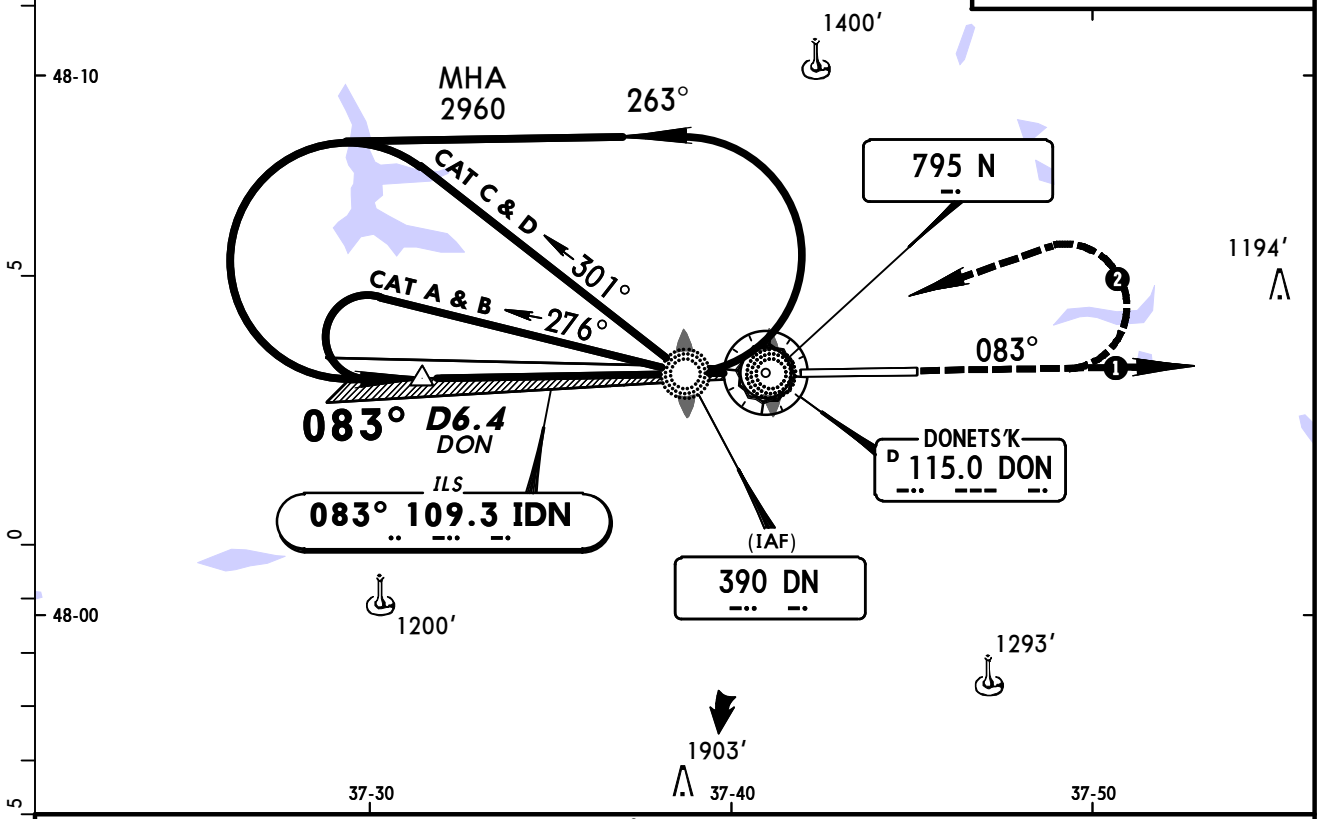


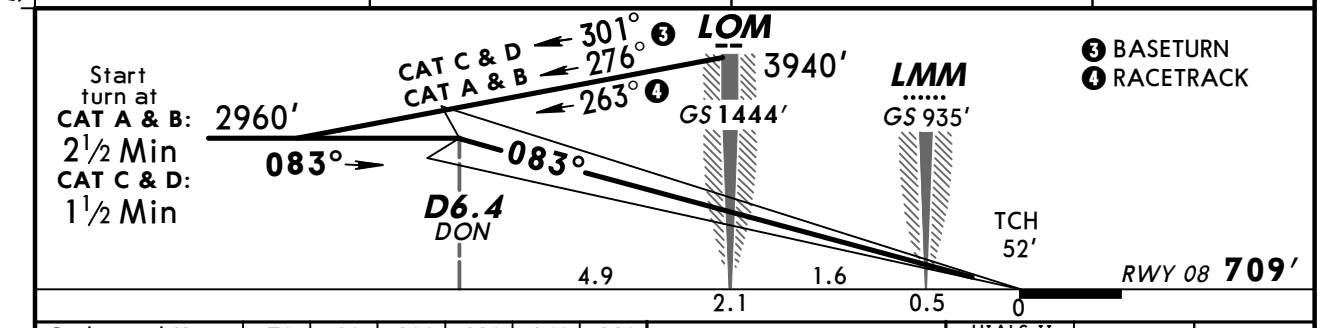


| Gnd speed-Kts | 70 | 90 | 100 | 120 | 140 | 160 |
|---|---|---|---|---|---|---|
| GS 3.00° | 372 | 478 | 531 | 637 | 743 | 849 |

HIALS-II
PAPI
2960′ on 083°

**JAR-OPS**

STRAIGHT-IN LANDING RWY **08**
**CAT II ILS**

ABCD
**RA 107′**
DA(H) **809′**(100′)

PANS OPS

RVR 300m ❶

❶ Operators applying U.S. Ops Specs: Autoland or HUD required below 350m.

*CHANGES:* Communications.

© JEPPESEN, 2012. ALL RIGHTS RESERVED.

BRIEFING STRIP ™

| ATIS | DONETS'K Approach Radar (APP) | DONETS'K Tower | Ground |
|---|---|---|---|
| 130.9 (Russian 121.3) | 134.0 | 118.3 | 119.0 |

| LOC IDO | Final Apch Crs | GS LOM | ILS DA(H) | Apt Elev / RWY |
|---|---|---|---|---|
| 111.7 | 263° | 1542′ (751′) | 983′ (200′) | 783′ / 783′ |

**MISSED APCH:** ❶ Climb on track 263° to 2960′, then as directed.
**WITH COMM FAILURE:** ❷ Climb on track 263° to 3940′, then turn RIGHT to DO NDB, then according to chart.

Alt Set: hPa (MM on req) Rwy Elev: 29 hPa Trans level: by ATC Trans alt: 10010′

3000′
MSA DON VOR

FT/METER CONVERSION
QNH

| | | |
|---|---|---|
| 10010′ | - | 3050m |
| 3940′ | - | 1200m |
| 2960′ | - | 900m |

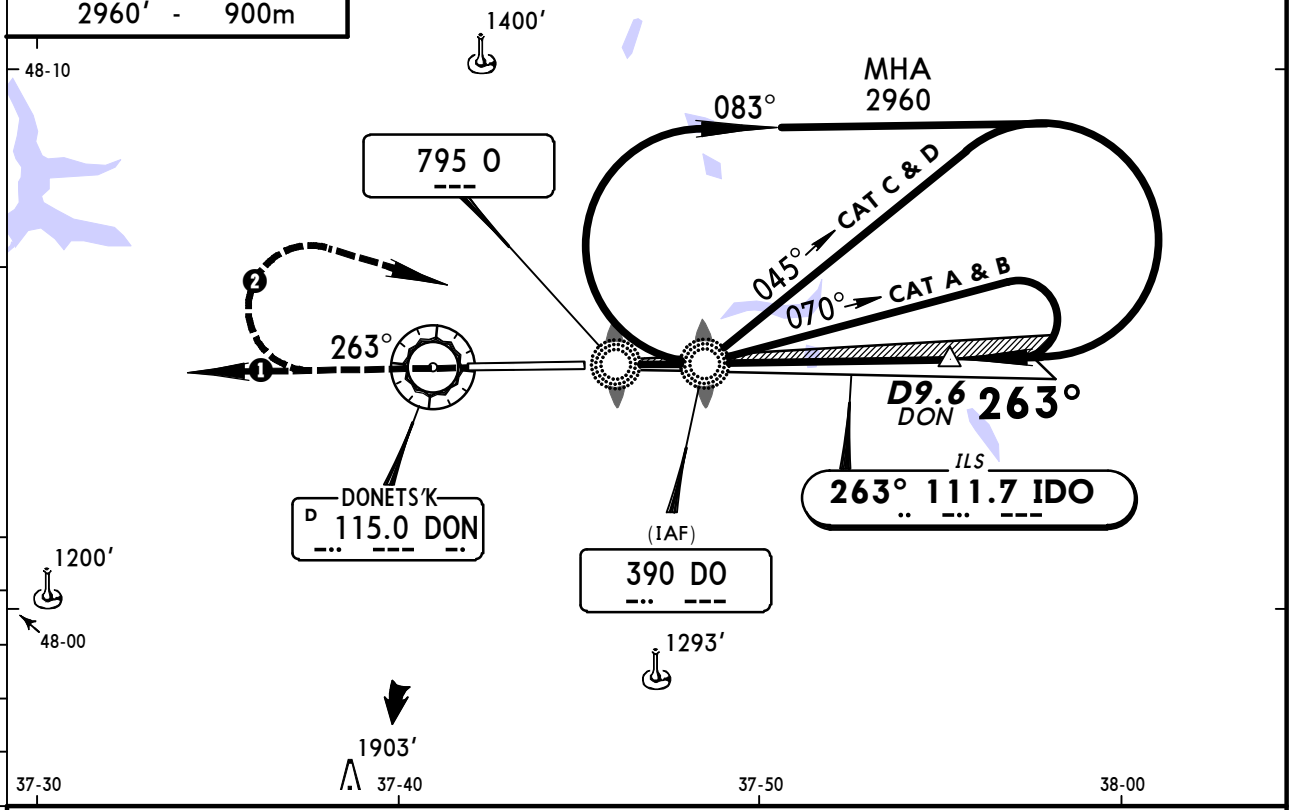


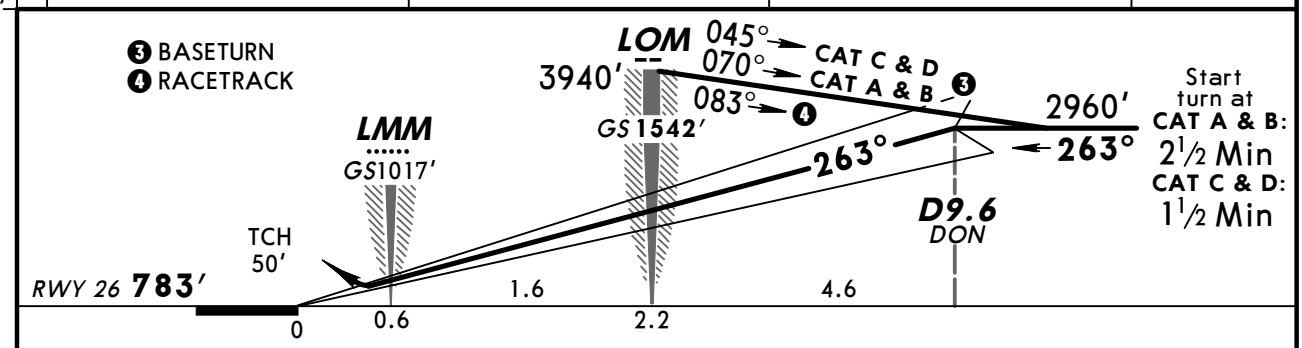


| Gnd speed-Kts | 70 | 90 | 100 | 120 | 140 | 160 |
|---|---|---|---|---|---|---|
| ILS GS 3.00° | 372 | 478 | 531 | 637 | 743 | 849 |

HIALS
PAPI
2960′ on 263°

**JAR-OPS** STRAIGHT-IN LANDING RWY **26**

| | ILS DA(H) 983′ (200′) FULL | ILS DA(H) 983′ (200′) ALS out | LOC (GS out) |
|---|---|---|---|
| A | RVR 550m | RVR 1000m | NOT AUTHORIZED |
| B | | | |
| C | | | |
| D | | | |

CIRCLE-TO-LAND
Not authorized South of airport btn R-110 DON & R-230 DON clockwise

| Max Kts | MDA(H) | VIS |
|---|---|---|
| 100 | 1280′ (497′) | 1500m |
| 135 | 1420′ (637′) | 1600m |
| 180 | 1510′ (727′) | 2400m |
| 205 | 1690′ (907′) | 3600m |

PANS OPS

*CHANGES:* Communications.

© JEPPESEN, 1999, 2012. ALL RIGHTS RESERVED.

BRIEFING STRIP

| ATIS | DONETS'K Approach Radar (APP) | DONETS'K Tower | Ground |
|---|---|---|---|
| 130.9 (Russian 121.3) | 134.0 | 118.3 | 119.0 |

| VOR | Final Apch Crs | Minimum Alt | MDA(H) | Apt Elev / RWY |
|---|---|---|---|---|
| DON 115.0 | 083° | D6.4 2960′ (2251′) | 1170′ (461′) | Apt Elev 783′ RWY 709′ |

**MISSED APCH:** ❶ Climb on track 083° to 2960′, then as directed.
**WITH COMM FAILURE:** ❷ Climb on track 083° to 3940′, then turn LEFT to DN NDB, then according to chart.

Alt Set: hPa (MM on req) Rwy Elev: 27 hPa Trans level: by ATC Trans alt: 10010′

3000′
MSA DON VOR

FT/METER CONVERSION
QNH
10010′ - 3050m
3940′ - 1200m
2960′ - 900m

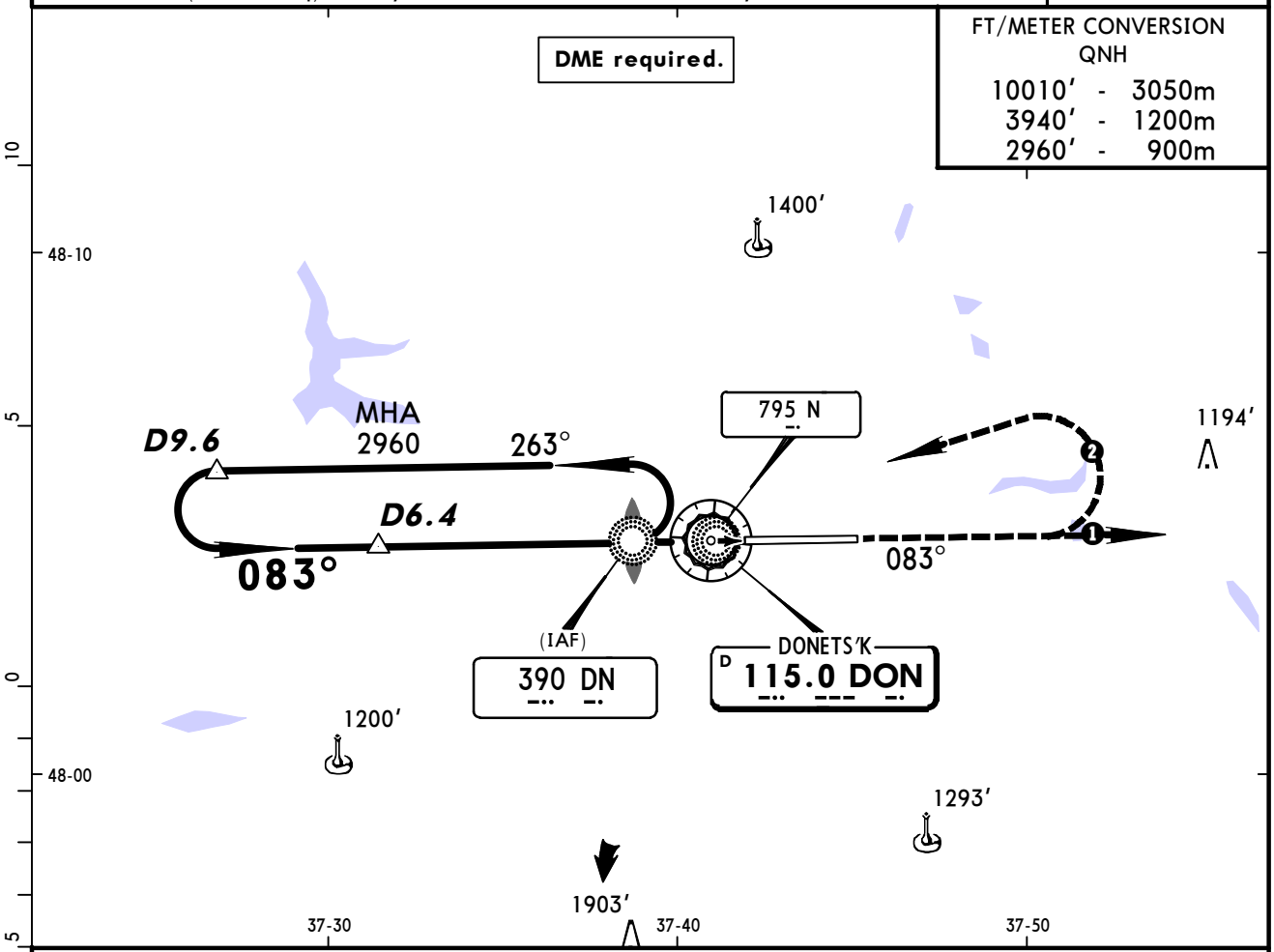


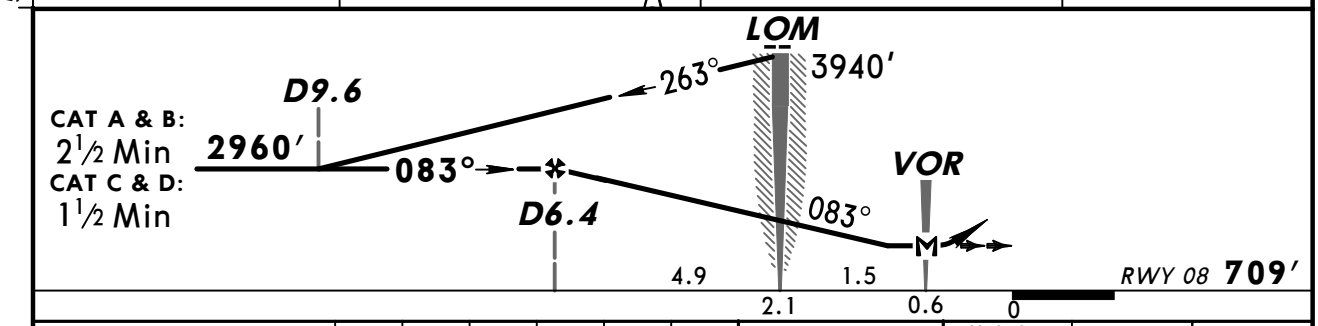


| Gnd speed-Kts | | 70 | 90 | 100 | 120 | 140 | 160 |
|---|---|---|---|---|---|---|---|
| Descent Angle | 3.00° | 372 | 478 | 531 | 637 | 743 | 849 |
| MAP at VOR | | | | | | | |

HIALS-II
PAPI
2960′ on 083°

PANS OPS

**JAR-OPS** STRAIGHT-IN LANDING RWY **08**

MDA(H) **1170′** (461′)

| | | ALS out |
|---|---|---|
| A | RVR 1000m | RVR 1500m |
| B | RVR 1200m | |
| C | | RVR 2000m |
| D | RVR 1600m | |

CIRCLE-TO-LAND ❶

Not authorized South of airport between R-110 & R-230 clockwise

| Max Kts | MDA(H) | VIS |
|---|---|---|
| 100 | 1280′ (571′) | 1500m |
| 135 | 1420′ (711′) | 1600m |
| 180 | 1510′ (801′) | 2400m |
| 205 | 1690′ (981′) | 3600m |

❶ Circling height based on rwy 08 thresh elevation of 709′.

*CHANGES:* Communications.

© JEPPESEN, 2008, 2012. ALL RIGHTS RESERVED.

BRIEFING STRIP

| ATIS | DONETS'K Approach Radar (APP) | DONETS'K Tower | Ground |
|---|---|---|---|
| 130.9 (Russian 121.3) | 134.0 | 118.3 | 119.0 |

| VOR | Final Apch Crs | Minimum Alt | MDA(H) | Apt Elev 783' |
|---|---|---|---|---|
| DON 115.0 | 263° | D9.6 2960' (2177') | (CONDITIONAL) 1220' (437') | RWY 783' |

**MISSED APCH:** ❶ Climb on track 263° to 2960', then as directed.
**WITH COMM FAILURE:** ❷ Climb on track 263° to 3940', then turn RIGHT to DO NDB, then according to chart.

Alt Set: hPa (MM on req) Rwy Elev: 29 hPa Trans level: by ATC Trans alt: 10010'

3000'
MSA DON VOR

FT/METER CONVERSION
QNH

| | | |
|---|---|---|
| 10010' | - | 3050m |
| 3940' | - | 1200m |
| 2960' | - | 900m |
| 1550' | - | 470m |

DME required.

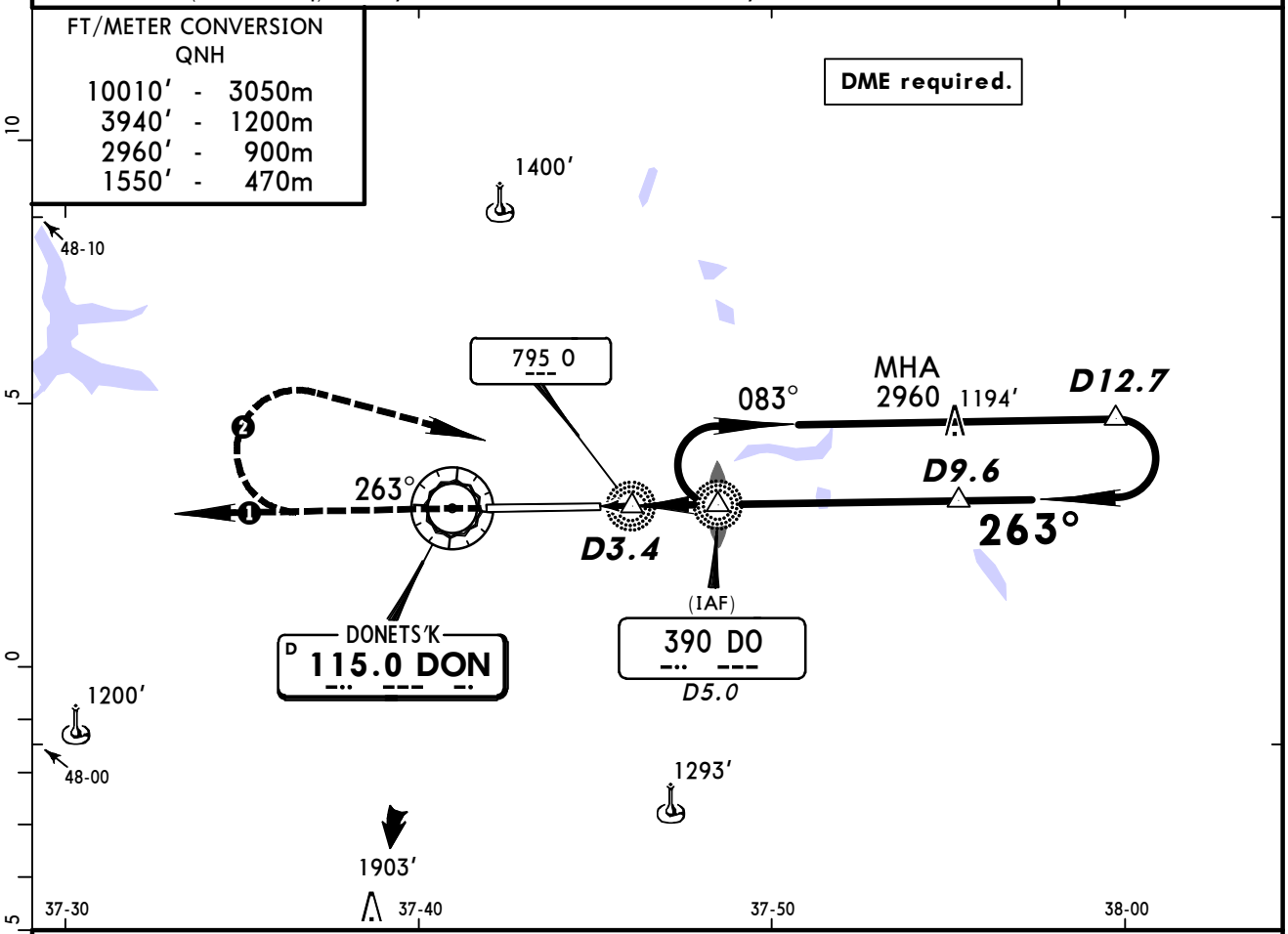


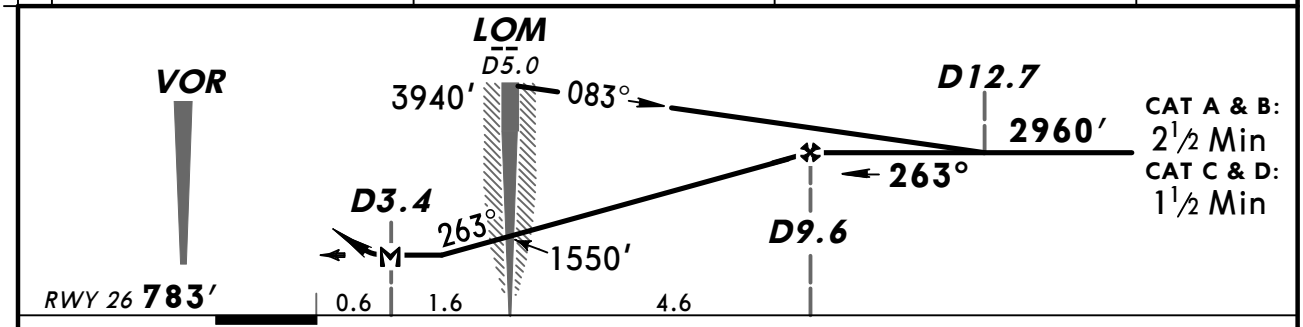


CAT A & B: 2½ Min
CAT C & D: 1½ Min

| Gnd speed-Kts | | 70 | 90 | 100 | 120 | 140 | 160 |
|---|---|---|---|---|---|---|---|
| Descent Angle | 3.00° | 372 | 478 | 531 | 637 | 743 | 849 |
| MAP at D3.4 | | | | | | | |

HIALS
PAPI

2960' on 263°

PANS OPS

**JAR-OPS** STRAIGHT-IN LANDING RWY 26

| | With D5.0 MDA(H) 1220' (437') | | W/o D5.0 MDA(H) 1420' (637') | |
|---|---|---|---|---|
| | | ALS out | | ALS out |
| A | RVR 900m | RVR 1500m | RVR 1000m | RVR 1500m |
| B | RVR 1000m | | RVR 1200m | |
| C | | RVR 1800m | | RVR 2000m |
| D | RVR 1400m | RVR 2000m | RVR 1600m | |

CIRCLE-TO-LAND
Not authorized South of airport between R-110 & R-230 clockwise

| Max Kts | MDA(H) | VIS |
|---|---|---|
| 100 | 1420' (637') | 1500m |
| 135 | 1420' (637') | 1600m |
| 180 | 1510' (727') | 2400m |
| 205 | 1690' (907') | 3600m |

*CHANGES:* Communications.

© JEPPESEN, 2008, 2012. ALL RIGHTS RESERVED.

BRIEFING STRIP

| ATIS | DONETS'K Approach Radar (APP) | DONETS'K Tower | Ground |
|---|---|---|---|
| 130.9 (Russian 121.3) | 134.0 | 118.3 | 119.0 |

| NDB | Final Apch Crs | Minimum Alt | MDA(H) | Apt Elev 783' |
|---|---|---|---|---|
| DN 390 | 083° | D6.4 2960' (2251') | (CONDITIONAL) 1170' (461') | RWY 709' |

**MISSED APCH:** ❶ Climb on track 083° to 2960', then as directed.
**WITH COMM FAILURE:** ❷ Climb on track 083° to 3940', then turn LEFT to DN NDB, then according to chart.

Alt Set: hPa (MM on req) Rwy Elev: 27 hPa Trans level: by ATC Trans alt: 10010'

3000'
MSA DON VOR

FT/METER CONVERSION
QNH
10010' - 3050m
3940' - 1200m
2960' - 900m

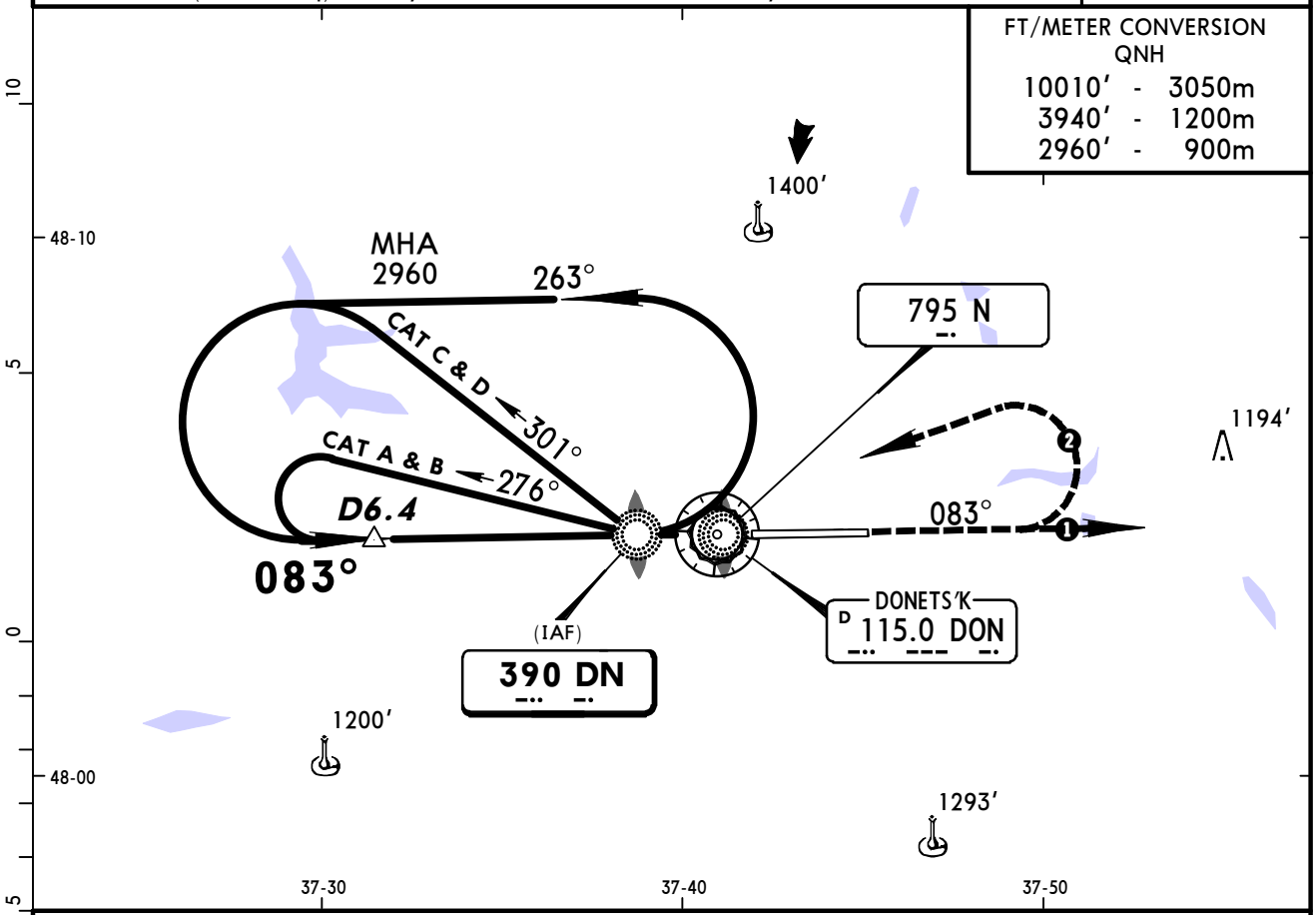


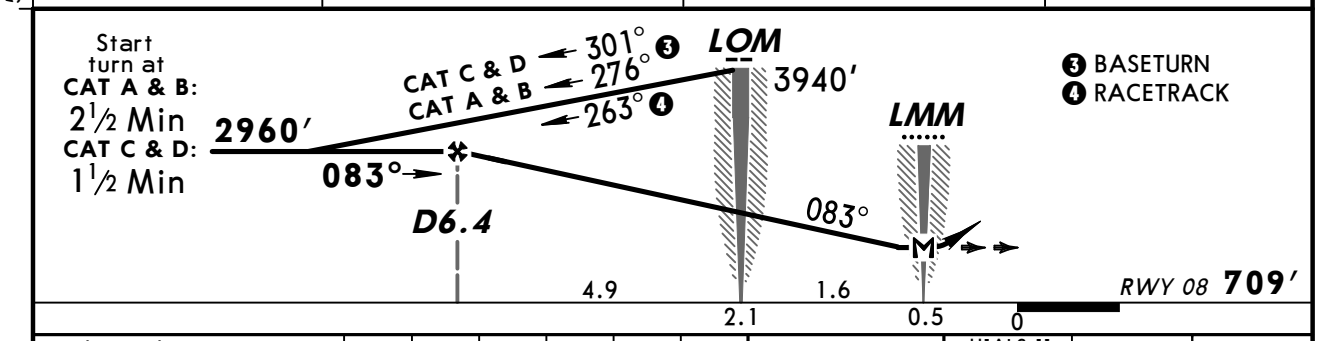


| Gnd speed-Kts | | 70 | 90 | 100 | 120 | 140 | 160 |
|---|---|---|---|---|---|---|---|
| Descent Angle | 3.00° | 372 | 478 | 531 | 637 | 743 | 649 |
| MAP at LMM | | | | | | | |

HIALS-II
PAPI
2960' on 083°

**JAR-OPS** STRAIGHT-IN LANDING RWY 08

| | With DME MDA(H) 1170'(461') | | W/o DME MDA(H) 1220'(511') | |
|---|---|---|---|---|
| | | ALS out | | ALS out |
| A | RVR 1000m | RVR 1500m | RVR 1000m | RVR 1500m |
| B | RVR 1200m | | RVR 1200m | |
| C | | RVR 2000m | | RVR 2000m |
| D | RVR 1600m | | RVR 1600m | |

CIRCLE-TO-LAND ❶

Not authorized South of airport between R-110 & R-230 clockwise

| Max Kts | MDA(H) | VIS |
|---|---|---|
| 100 | 1280'(571') | 1500m |
| 135 | 1420'(711') | 1600m |
| 180 | 1510'(801') | 2400m |
| 205 | 1690'(981') | 3600m |

PANS OPS

❶ Circling height based on rwy 08 thresh elevation of 709'.

*CHANGES:* Communications.

© JEPPESEN, 2004, 2012. ALL RIGHTS RESERVED.

BRIEFING STRIP

| ATIS | DONETS'K Approach Radar (APP) | DONETS'K Tower | Ground |
|---|---|---|---|
| 130.9 (Russian 121.3) | 134.0 | 118.3 | 119.0 |

| NDB DO | Final Apch Crs | Minimum Alt | 2 NDB MDA(H) | Apt Elev / RWY |
|---|---|---|---|---|
| 390 | 263° | D9.6 2960′ (2177′) | 1220′ (437′) | Apt Elev 783′ / RWY 783′ |

**MISSED APCH:** ❶ Climb on track 263° to 2960′, then as directed.
**WITH COMM FAILURE:** ❷ Climb on track 263° to 3940′, then turn RIGHT to DO NDB, then according to chart.

Alt Set: hPa (MM on req) Rwy Elev: 29 hPa Trans level: by ATC Trans alt: 10010′

3000′
MSA DON VOR

FT/METER CONVERSION
QNH

| | | |
|---|---|---|
| 10010′ | - | 3050m |
| 3940′ | - | 1200m |
| 2960′ | - | 900m |
| 1550′ | - | 470m |

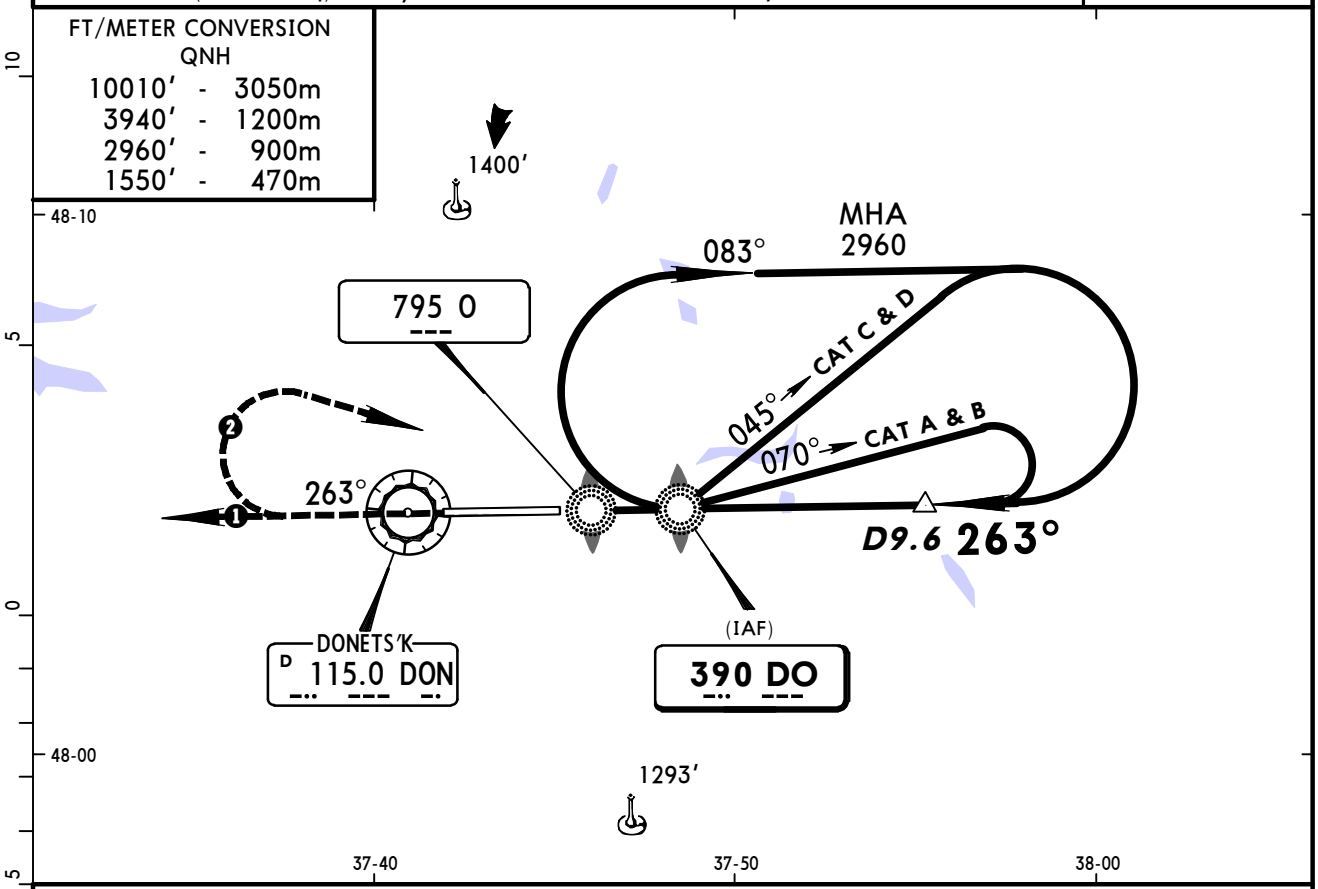


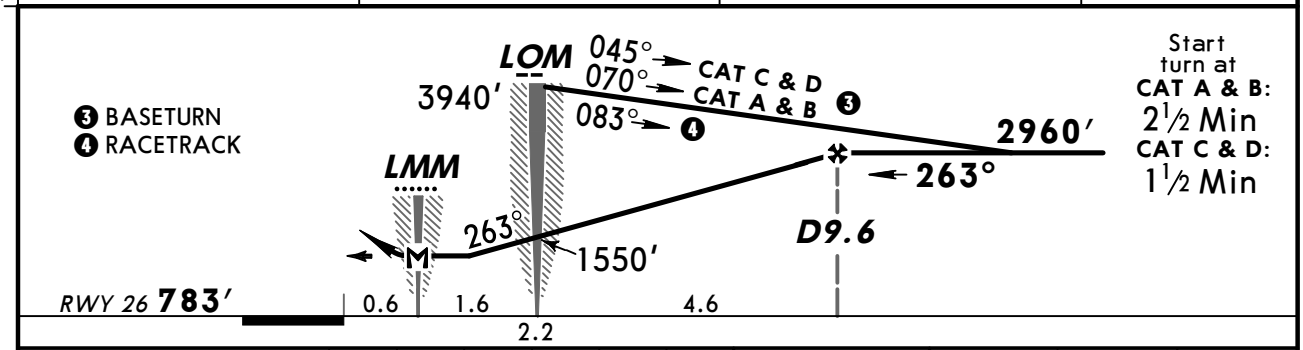


| Gnd speed-Kts | | 70 | 90 | 100 | 120 | 140 | 160 |
|---|---|---|---|---|---|---|---|
| Descent Angle | 3.00° | 372 | 478 | 531 | 637 | 743 | 849 |
| MAP at LMM | | | | | | | |

HIALS
PAPI
2960′ on 263°

**JAR-OPS** STRAIGHT-IN LANDING RWY **26**

| | 2 NDB MDA(H) 1220′(437′) | | O Lctr with DME MDA(H) 1420′(637′) | | O Lctr w/o DME MDA(H) 1480′(697′) | |
|---|---|---|---|---|---|---|
| | | ALS out | | ALS out | | ALS out |
| A | RVR 900m | RVR 1500m | RVR 1000m | RVR 1500m | RVR 1200m | RVR 1500m |
| B | RVR 1000m | | RVR 1200m | | RVR 1400m | |
| C | | RVR 1800m | | RVR 2000m | | RVR 2000m |
| D | RVR 1400m | RVR 2000m | RVR 1600m | | RVR 1800m | |

CIRCLE-TO-LAND

Not authorized South of airport between R-110 & R-210 clockwise

| Max Kts | MDA(H) | VIS |
|---|---|---|
| 100 | 1480′(697′) | 1500m |
| 135 | 1480′(697′) | 1600m |
| 180 | 1510′(727′) | 2400m |
| 205 | 1690′(907′) | 3600m |

PANS OPS

*CHANGES:* Communications.

© JEPPESEN, 2004, 2012. ALL RIGHTS RESERVED.

(c) JEPPESEN SANDERSON, INC., 2013, ALL RIGHTS RESERVED

JEPPESEN
JeppView for Windows

## Chart changes since cycle 07-2013

ADD = added chart, REV = revised chart, DEL = deleted chart.

| ACT | PROCEDURE IDENT | INDEX | REV DATE | EFF DATE |
|---|---|---|---|---|

**DONETS'K, (DONETS'K - UKCC)**

(c) JEPPESEN SANDERSON, INC., 2013, ALL RIGHTS RESERVED


# TERMINAL CHART CHANGE NOTICES

## No Chart Change Notices for Airport UKCC