(c) JEPPESEN SANDERSON, INC., 2012, ALL RIGHTS RESERVED

List of pages in this Trip Kit

Trip Kit Index
Airport Information For URWA
Terminal Charts For URWA
Revision Letter For Cycle 25-2012
Change Notices
Notebook

(c) JEPPESEN SANDERSON, INC., 2012, ALL RIGHTS RESERVED

General Information

Location: Astrakhan Rus
IATA Code: ASF
Lat/Long: N46° 17.0' E048° 00.4'
Elevation: -65 ft

Airport Use: Public
Magnetic Variation: 7.9°E

Fuel Types: Jet A-1
Repair Types: Minor Airframe, Minor Engine
Customs: Yes
Airport Type: IFR
Landing Fee: Yes
Control Tower: Yes
Jet Start Unit: No
LLWS Alert: No
Beacon: No

Sunrise: 0431 Z
Sunset: 1310 Z,

Runway Information

Runway: 09
Length x Width: 10499 ft x 148 ft
Surface Type: asphalt
TDZ-Elev: -72 ft
Lighting: Edge, ALS

Runway: 11
Length x Width: 6398 ft x 328 ft
Surface Type: grass
TDZ-Elev: -74 ft

Runway: 27
Length x Width: 10499 ft x 148 ft
Surface Type: asphalt
TDZ-Elev: -70 ft
Lighting: Edge, ALS

Runway: 29
Length x Width: 6398 ft x 328 ft
Surface Type: grass
TDZ-Elev: -79 ft

Communication Information

(c) JEPPESEN SANDERSON, INC., 2012, ALL RIGHTS RESERVED

ATIS 131.5 Non-English
ATIS 125.625
Astrakhan Tower 129.0 Secondary
Astrakhan Tower 118.6 MF
Astrakhan Approach Control 129.0 Secondary
Astrakhan Approach Control 126.0 MF
Astrakhan Krug Radar 129.0 Secondary VHF-DF
Astrakhan Krug Radar 120.6

ATIS	Apt Elev	
125.62 (Russian 131.5)	-65′	Alt Set: MM (hPa on request) QNH on request **(QFE)** Trans level: FL40 Trans alt: 1910′ ***(1980′)*** For noise limitation flight mode as per flight manual.

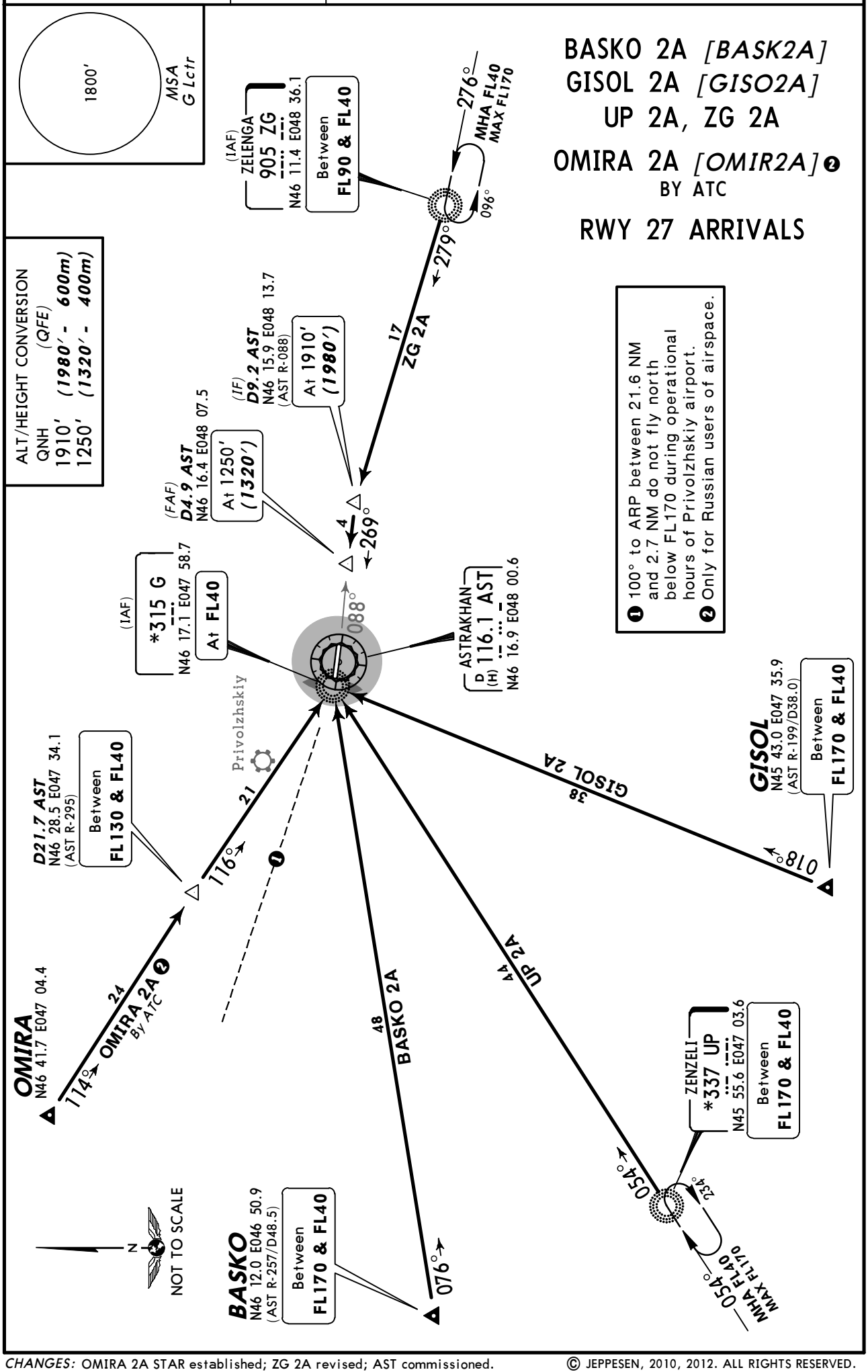

CHANGES: OMIRA 2A STAR established; ZG 2A revised; AST commissioned.

© JEPPESEN, 2010, 2012. ALL RIGHTS RESERVED.

ATIS	Apt Elev	
125.62 (Russian 131.5)	-65′	Alt Set: MM (hPa on request) QNH on request **(QFE)** Trans level: FL40 Trans alt: 1910′ ***(1982′)*** For noise limitation flight mode as per flight manual.

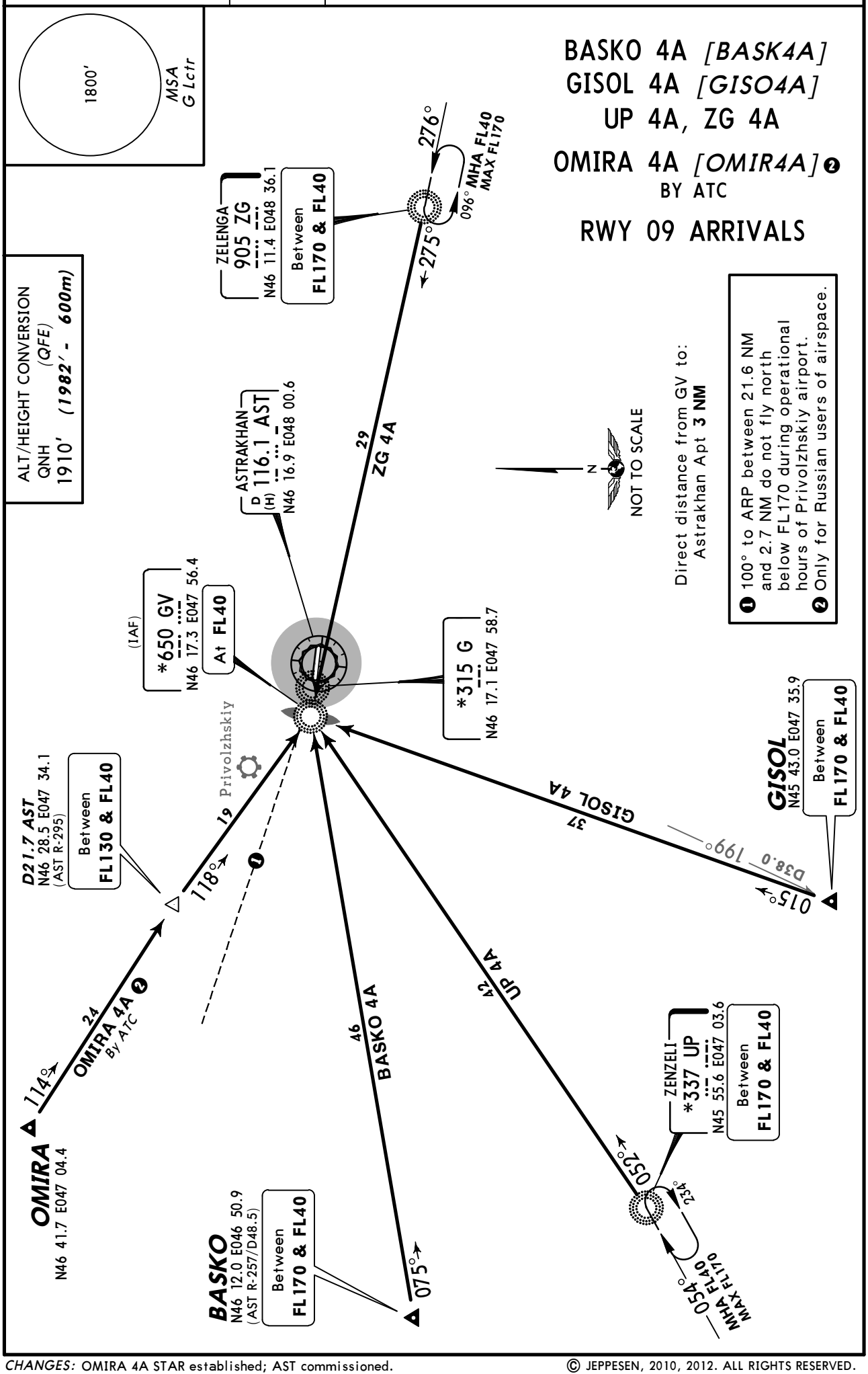

CHANGES: OMIRA 4A STAR established; AST commissioned.

© JEPPESEN, 2010, 2012. ALL RIGHTS RESERVED.

ATIS	Apt Elev	
125.62 (Russian 131.5)	-65′	Alt Set: MM (hPa on request) QNH on request **(QFE)** Trans level: FL40 Trans alt: 1910′ ***(1980′)*** For noise limitation flight mode as per flight manual.

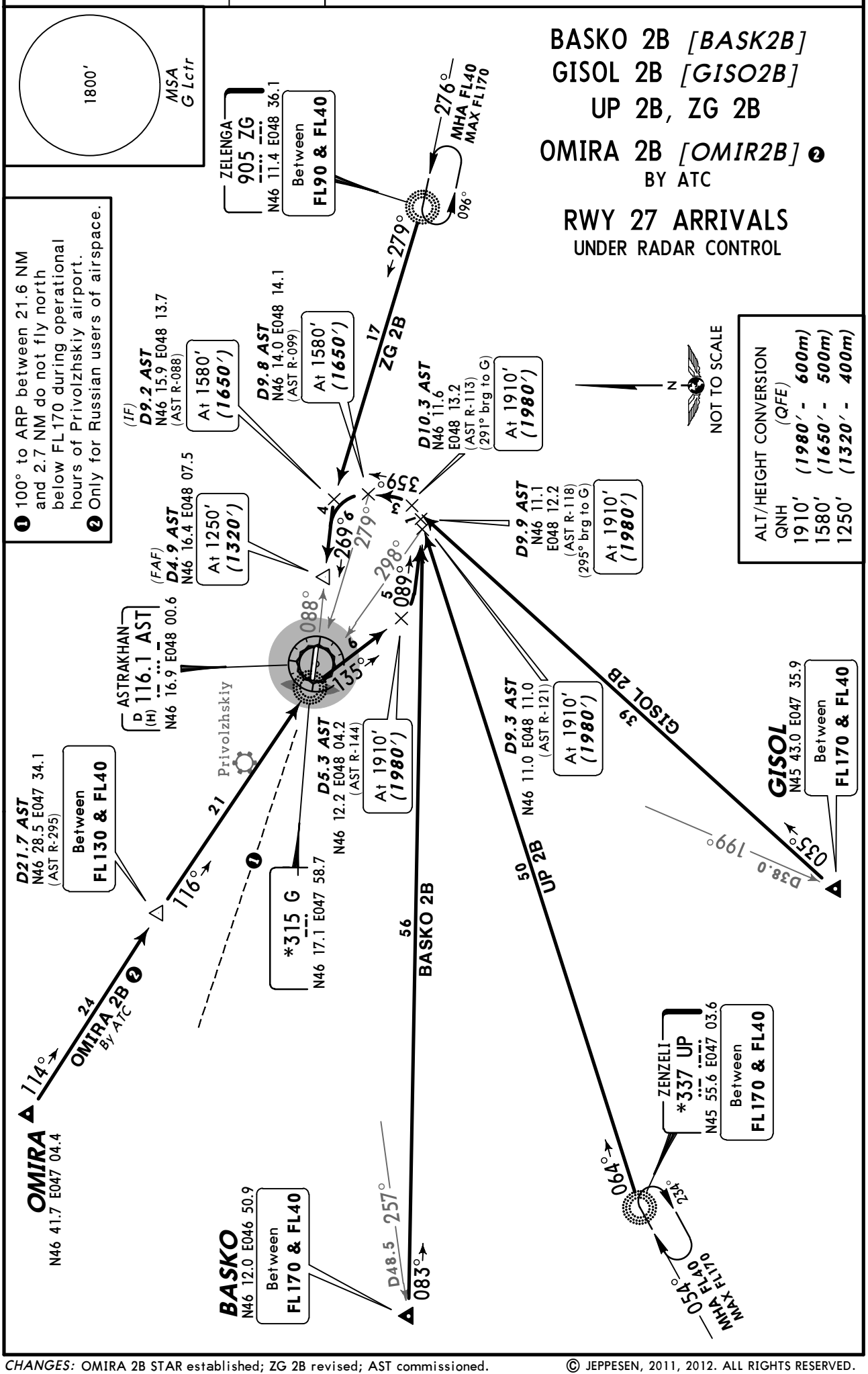

CHANGES: OMIRA 2B STAR established; ZG 2B revised; AST commissioned.

© JEPPESEN, 2011, 2012. ALL RIGHTS RESERVED.

ATIS	Apt Elev	
125.62 (Russian 131.5)	-65′	Alt Set: MM (hPa on request) QNH on request **(QFE)** Trans level: FL40 Trans alt: 1910′ ***(1982′)*** For noise limitation flight mode as per flight manual.

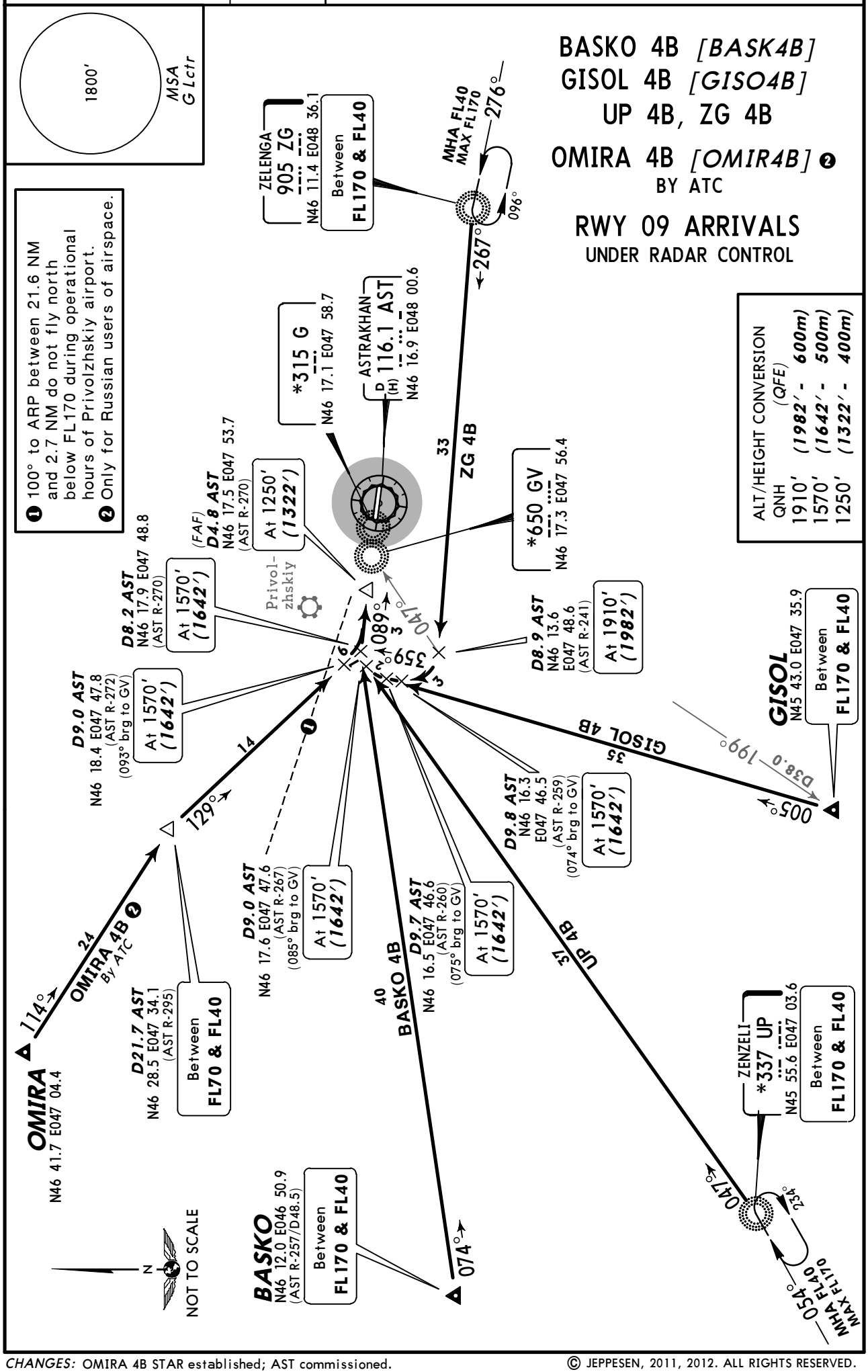

CHANGES: OMIRA 4B STAR established; AST commissioned.

© JEPPESEN, 2011, 2012. ALL RIGHTS RESERVED.

ATIS	Apt Elev	
125.62 (Russian 131.5)	-65′	Alt Set: MM (hPa on request) QNH on request **(QFE)** Trans level: FL40 Trans alt (hgt): 1910′ ***(1980′)*** For noise limitation flight mode as per flight manual.

LOBIT 2A *[LOBI2A]*
RWY 27 ARRIVAL
FOR FLIGHTS FROM OIL RIG (PLATFORM) ONLY

FOR RUSSIAN USERS ONLY

1800′
MSA
G Lctr

❶ 100° to ARP between 21.6 NM and 2.7 NM do not fly north below FL170 during operational hours of Privolzhskiy airport.

N
NOT TO SCALE

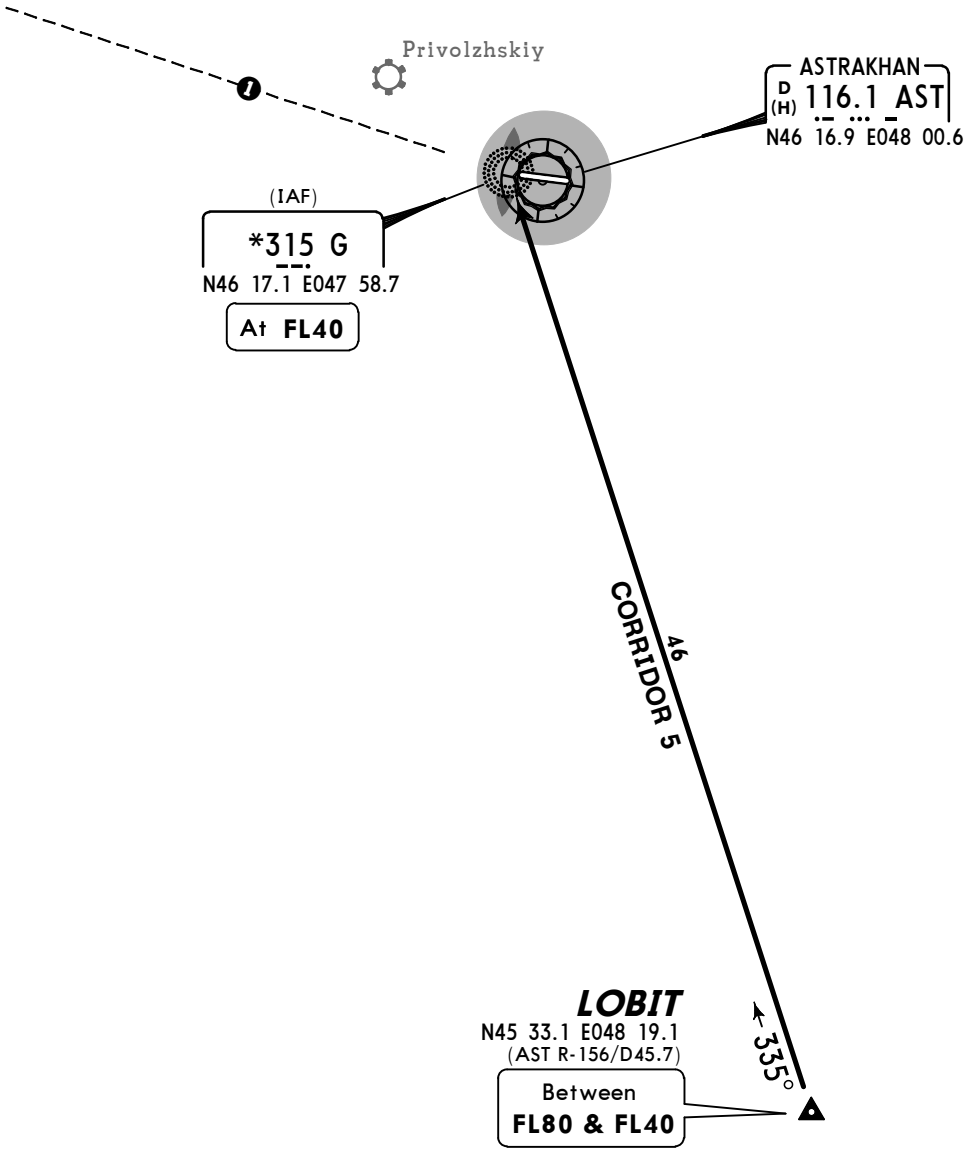

ALT/HEIGHT CONVERSION

QNH	(QFE)
1910′	***(1980′ - 600m)***

CHANGES: OMIRA 2A STAR withdrawn; AST commissioned.

© JEPPESEN, 2011, 2012. ALL RIGHTS RESERVED.

ATIS	Apt Elev	
125.62 (Russian 131.5)	-65′	Alt Set: MM (hPa on request) QNH on request **(QFE)** Trans level: FL40 Trans alt (hgt): 1910′ ***(1982′)*** For noise limitation flight mode as per flight manual.

LOBIT 4A *[LOBI4A]*
RWY 09 ARRIVAL
FOR FLIGHTS FROM OIL RIG (PLATFORM) ONLY

FOR RUSSIAN USERS ONLY

1800′
MSA
G Lctr

Direct distance from GV to:
Astrakhan Apt **3 NM**

❶ 100° to ARP between 21.6 NM and 2.7 NM do not fly north below FL170 during operational hours of Privolzhskiy airport.

N
NOT TO SCALE

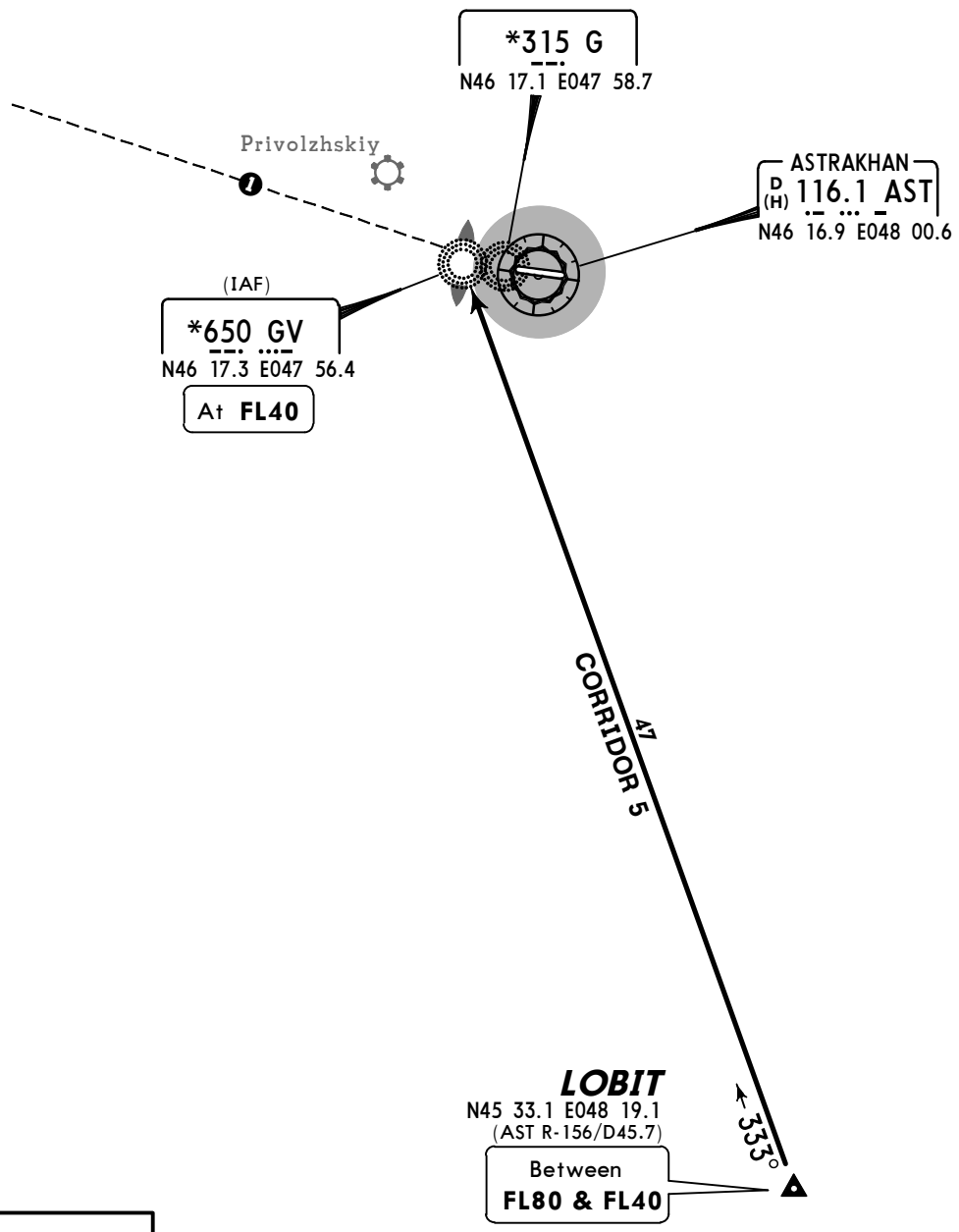

ALT/HEIGHT CONVERSION
QNH (QFE)
1910′ ***(1982′ - 600m)***

CHANGES: OMIRA 4A STAR withdrawn; AST commissioned.

© JEPPESEN, 2011, 2012. ALL RIGHTS RESERVED.

ATIS	Apt Elev	
125.62 (Russian 131.5)	-65′	Alt Set: MM (hPa on request) QNH on request **(QFE)** Trans level: FL40 Trans alt (hgt): 1910′ ***(1980′)*** For noise limitation flight mode as per flight manual.

LOBIT 2B *[LOBI2B]*
RWY 27 ARRIVAL
UNDER RADAR CONTROL
FOR FLIGHTS FROM OIL RIG (PLATFORM) ONLY

FOR RUSSIAN USERS ONLY

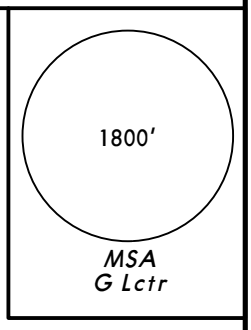

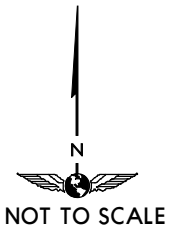

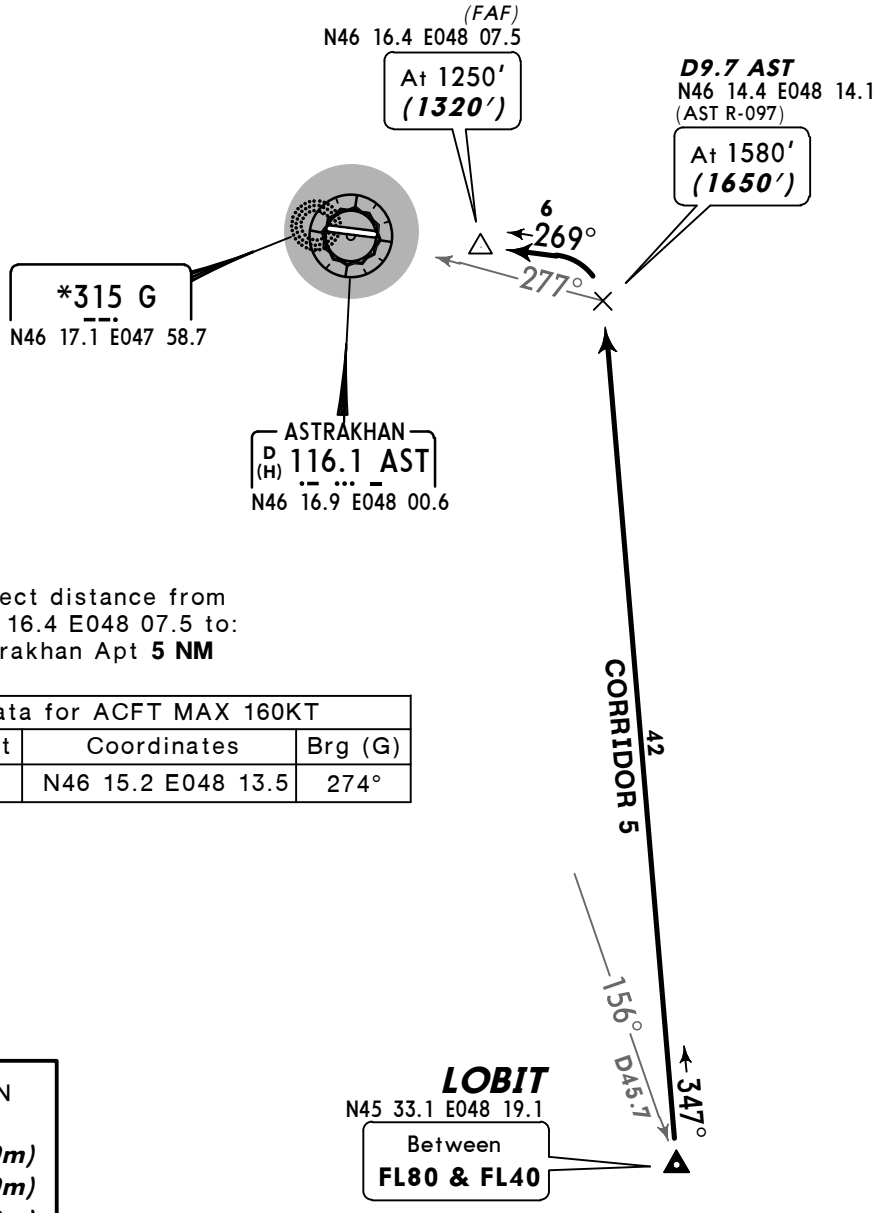

Direct distance from
N46 16.4 E048 07.5 to:
Astrakhan Apt **5 NM**

Arrival Data for ACFT MAX 160KT				
Point	Track	Dist	Coordinates	Brg (G)
LOBIT	347°	42	N46 15.2 E048 13.5	274°

ALT/HEIGHT CONVERSION

QNH	(QFE)
1910′	***(1980′ - 600m)***
1580′	***(1650′ - 500m)***
1250′	***(1320′ - 400m)***

CHANGES: OMIRA 2B STAR withdrawn; AST commissioned.

© JEPPESEN, 2011, 2012. ALL RIGHTS RESERVED.

ATIS	Apt Elev	
125.62 (Russian 131.5)	-65′	Alt Set: MM (hPa on request) QNH on request **(QFE)** Trans level: FL40 Trans alt (hgt): 1910′ ***(1982′)*** For noise limitation flight mode as per flight manual.

LOBIT 4B *[LOBI4B]*
RWY 09 ARRIVAL
UNDER RADAR CONTROL
FOR FLIGHTS FROM OIL RIG (PLATFORM) ONLY

FOR RUSSIAN USERS ONLY

1800′
MSA
G Lctr

❶ 100° to ARP between 21.6 NM and 2.7 NM do not fly north below FL170 during operational hours of Privolzhskiy airport.

Direct distance from N46 17.5 E047 53.7 to: Astrakhan Apt **5 NM**

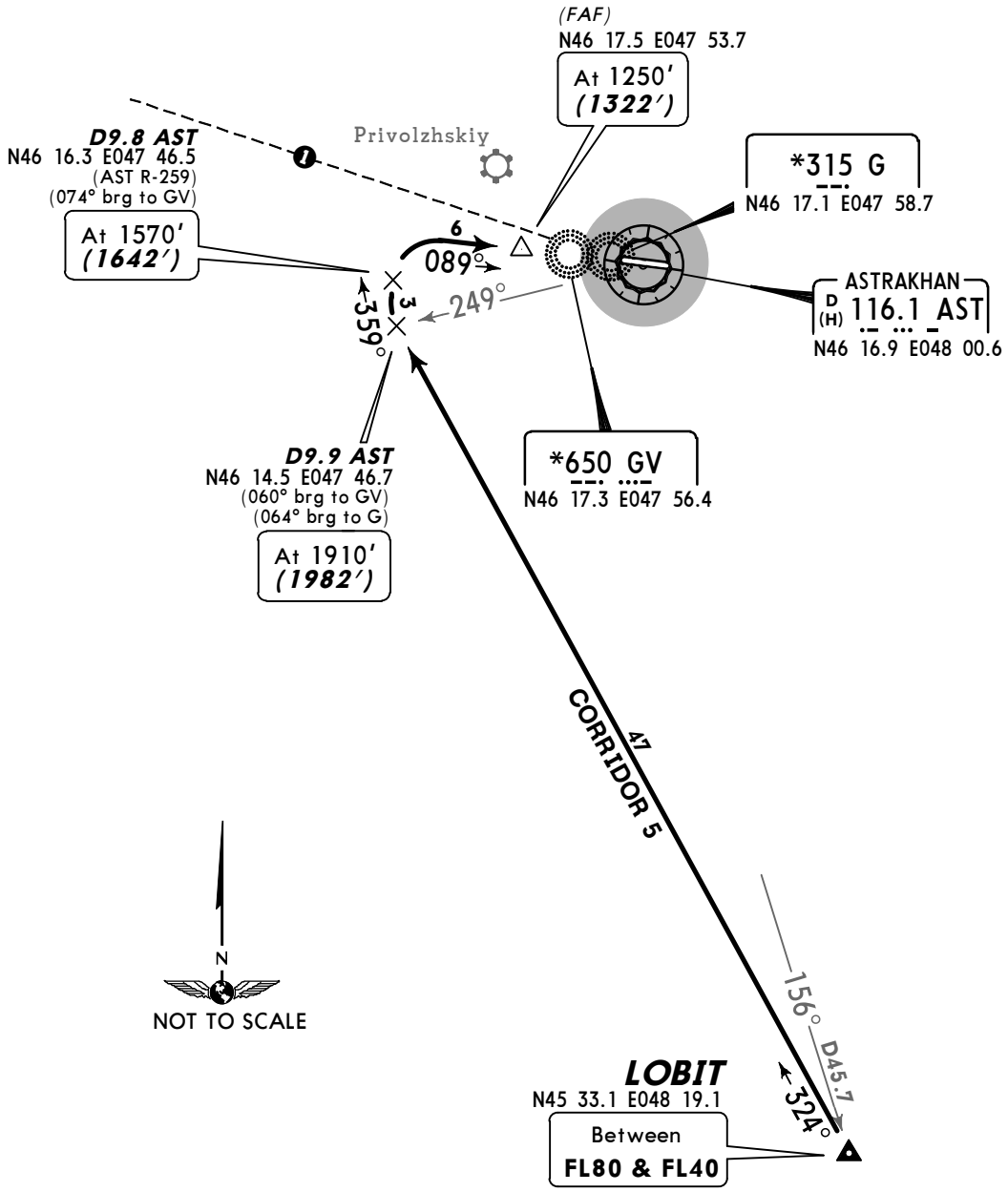

ALT/HEIGHT CONVERSION

QNH	(QFE)
1910′	***(1982′ - 600m)***
1570′	***(1642′ - 500m)***
1250′	***(1322′ - 400m)***

Arrival Data for ACFT MAX 160KT				
Point	Track	Dist	Coordinates	Brg (GV/G)
LOBIT	327°	48	N46 17.8 E047 50.4	069°/073°
	359°	4	N46 17.0 E047 49.3	079°/080°

CHANGES: OMIRA 4B STAR withdrawn; AST commissioned.

© JEPPESEN, 2011, 2012. ALL RIGHTS RESERVED.

Apt Elev -65′	QNH on request **(QFE)** Trans level: FL40 Trans alt: 1910′ ***(1982′)*** For noise limitation flight mode as per flight manual.

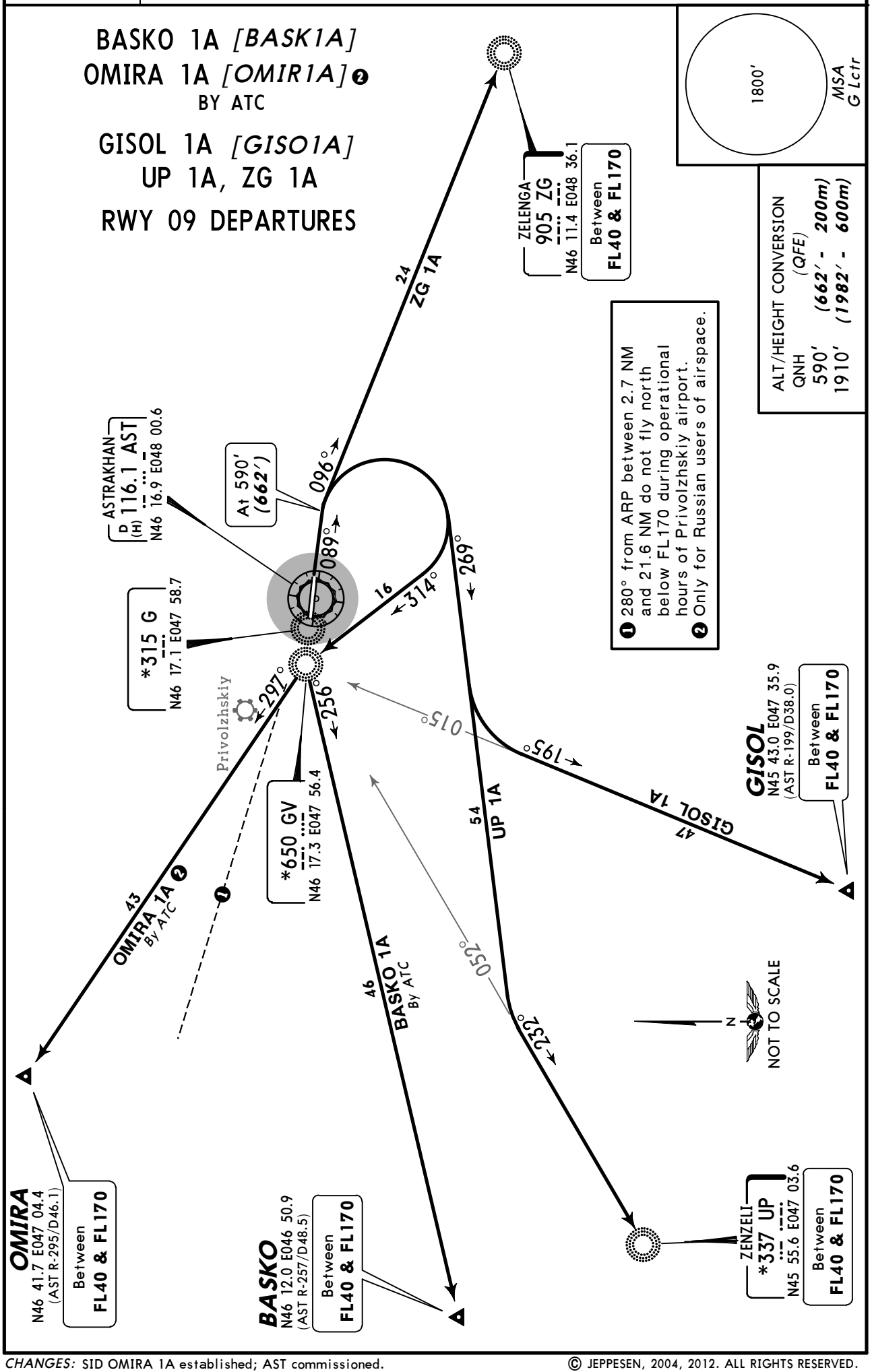

CHANGES: SID OMIRA 1A established; AST commissioned.

© JEPPESEN, 2004, 2012. ALL RIGHTS RESERVED.

Apt Elev -65′	QNH on request **(QFE)** Trans level: FL40 Trans alt: 1910′ ***(1980′)*** For noise limitation flight mode as per flight manual.

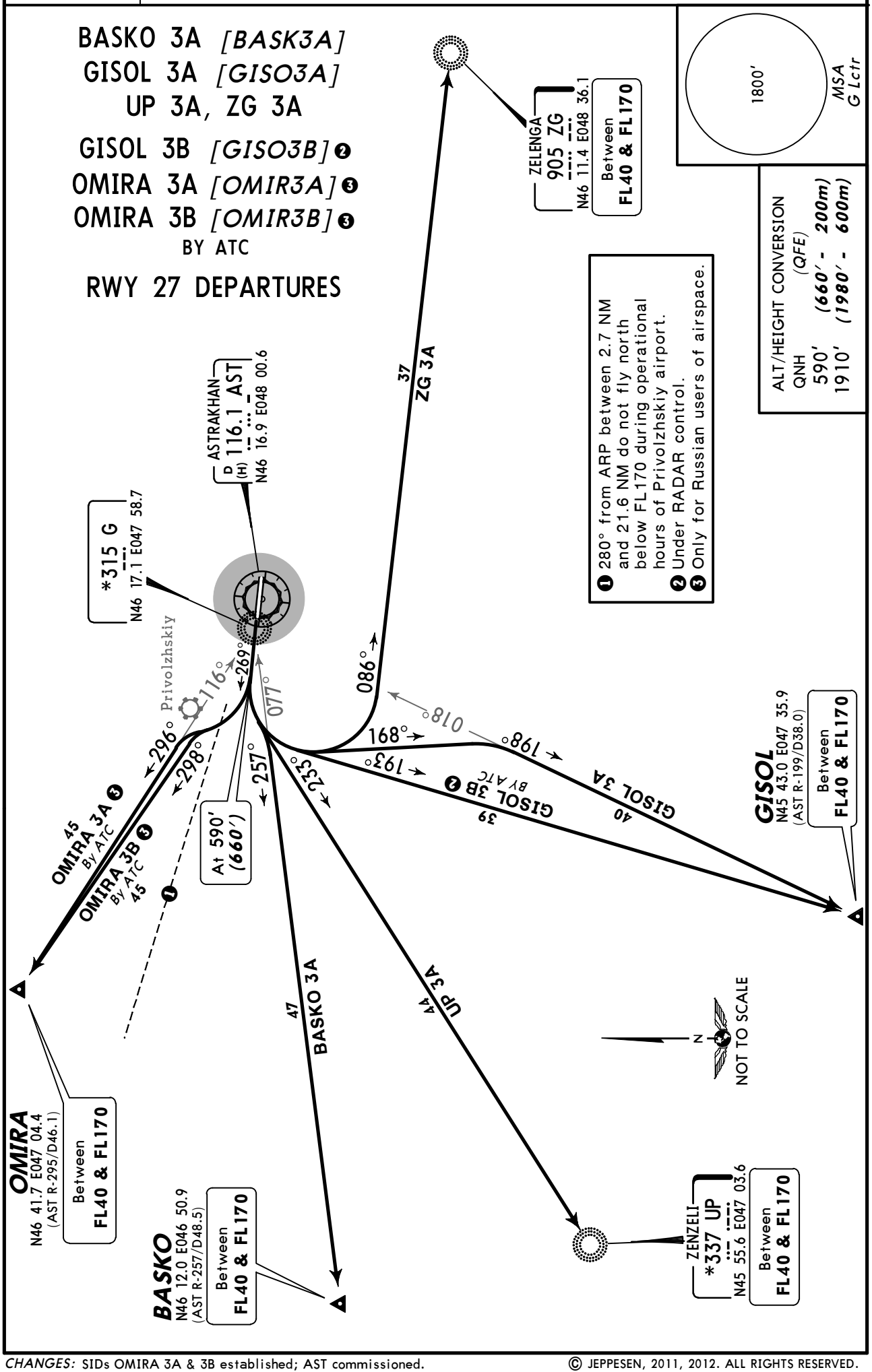

CHANGES: SIDs OMIRA 3A & 3B established; AST commissioned.

© JEPPESEN, 2011, 2012. ALL RIGHTS RESERVED.

Apt Elev -65′	QNH on request **(QFE)** Trans level: FL40 Trans alt: 1910′ ***(1982′)*** For noise limitation flight mode as per flight manual.

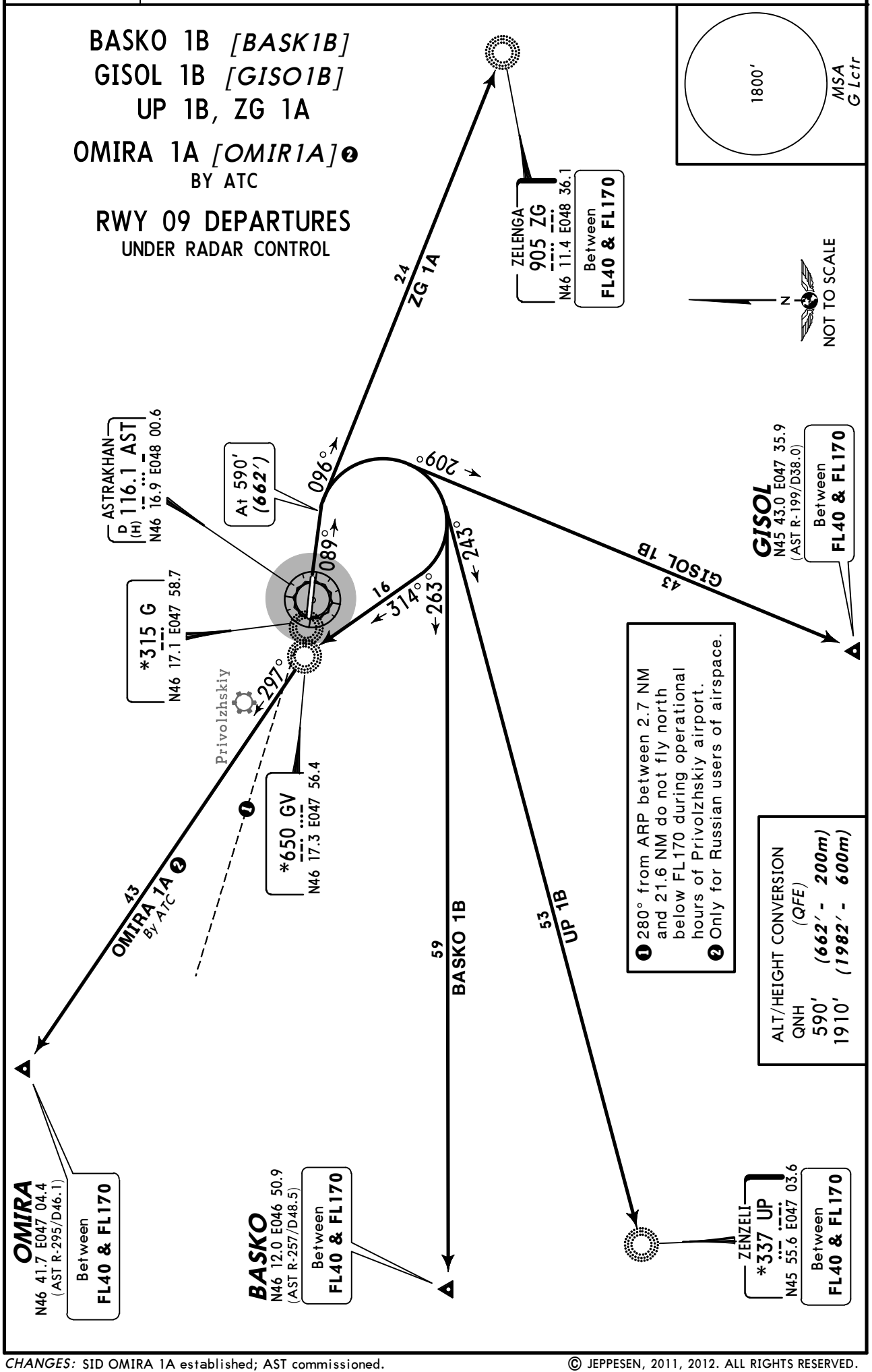

CHANGES: SID OMIRA 1A established; AST commissioned.

© JEPPESEN, 2011, 2012. ALL RIGHTS RESERVED.

Apt Elev -65′	QNH on request **(QFE)** Trans level: FL40 Trans alt (hgt): 1910′ ***(1982′)*** For noise limitation flight mode as per flight manual.

1800′
MSA
G Lctr

LOBIT 1A *[LOBI1A]*

LOBIT 1B *[LOBI1B]*

UNDER RADAR CONTROL

RWY 09 DEPARTURES

FOR FLIGHTS TO OIL RIG (PLATFORM) ONLY

FOR RUSSIAN USERS ONLY

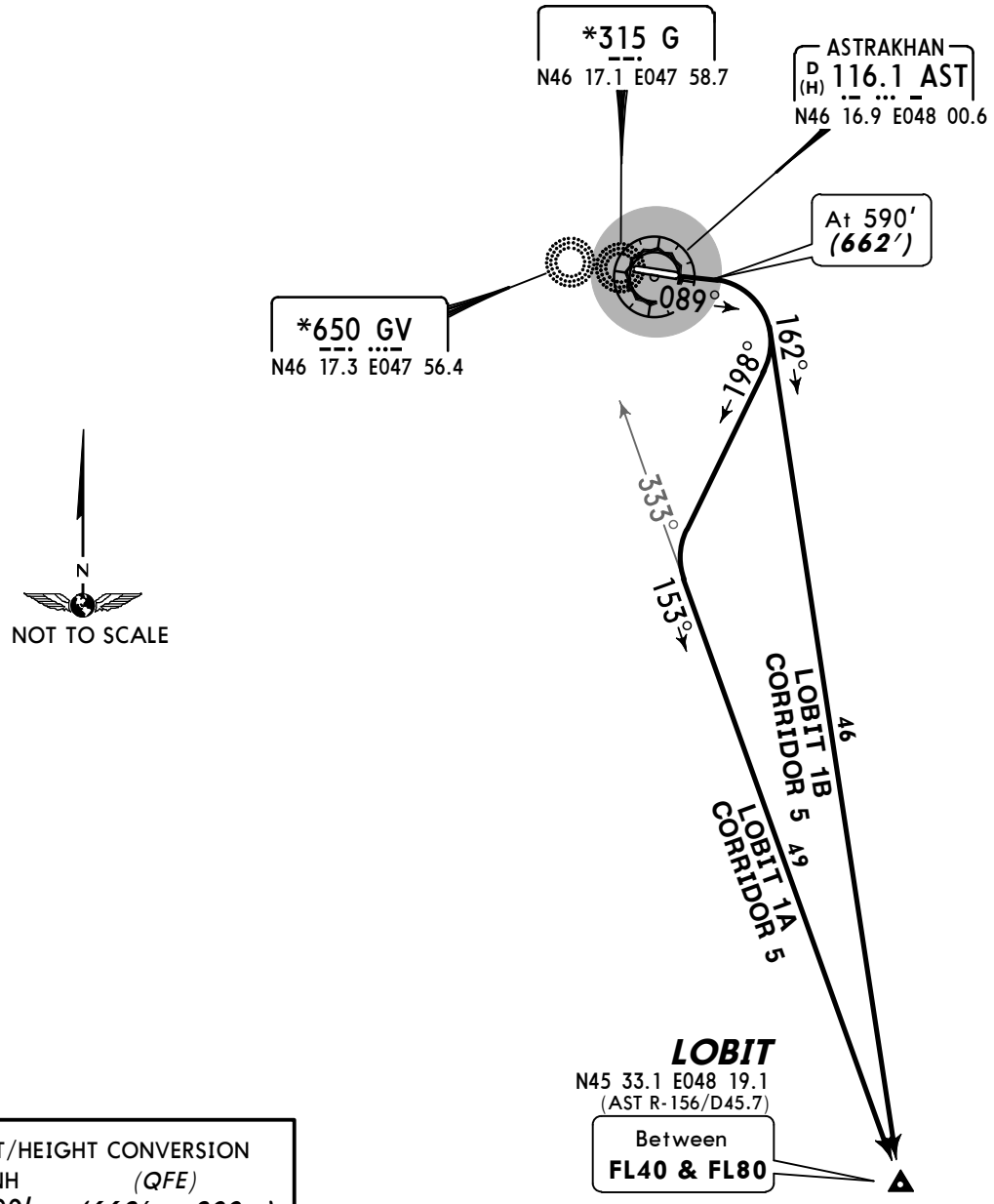

ALT/HEIGHT CONVERSION

QNH	(QFE)
590′	***(662′ - 200m)***
1910′	***(1982′ - 600m)***

SID	ROUTING
LOBIT 1A	Climb straight ahead to 590′ (662′), turn RIGHT, 198° track, intercept 153° bearing from GV to LOBIT.
LOBIT 1B	Climb straight ahead to 590′ (662′), turn RIGHT, 162° track to LOBIT.

CHANGES: SID OMIRA 1A withdrawn; AST commissioned.

© JEPPESEN, 2011, 2012. ALL RIGHTS RESERVED.

Apt Elev	
-65′	QNH on request **(QFE)** Trans level: FL40 Trans alt (hgt): 1910′ ***(1980′)*** For noise limitation flight mode as per flight manual.

MSA
G Lctr
1800′

LOBIT 3A *[LOBI3A]*

LOBIT 3B *[LOBI3B]*

UNDER RADAR CONTROL
BY ATC

RWY 27 DEPARTURES

FOR FLIGHTS TO OIL RIG (PLATFORM) ONLY

FOR RUSSIAN USERS ONLY

N
NOT TO SCALE

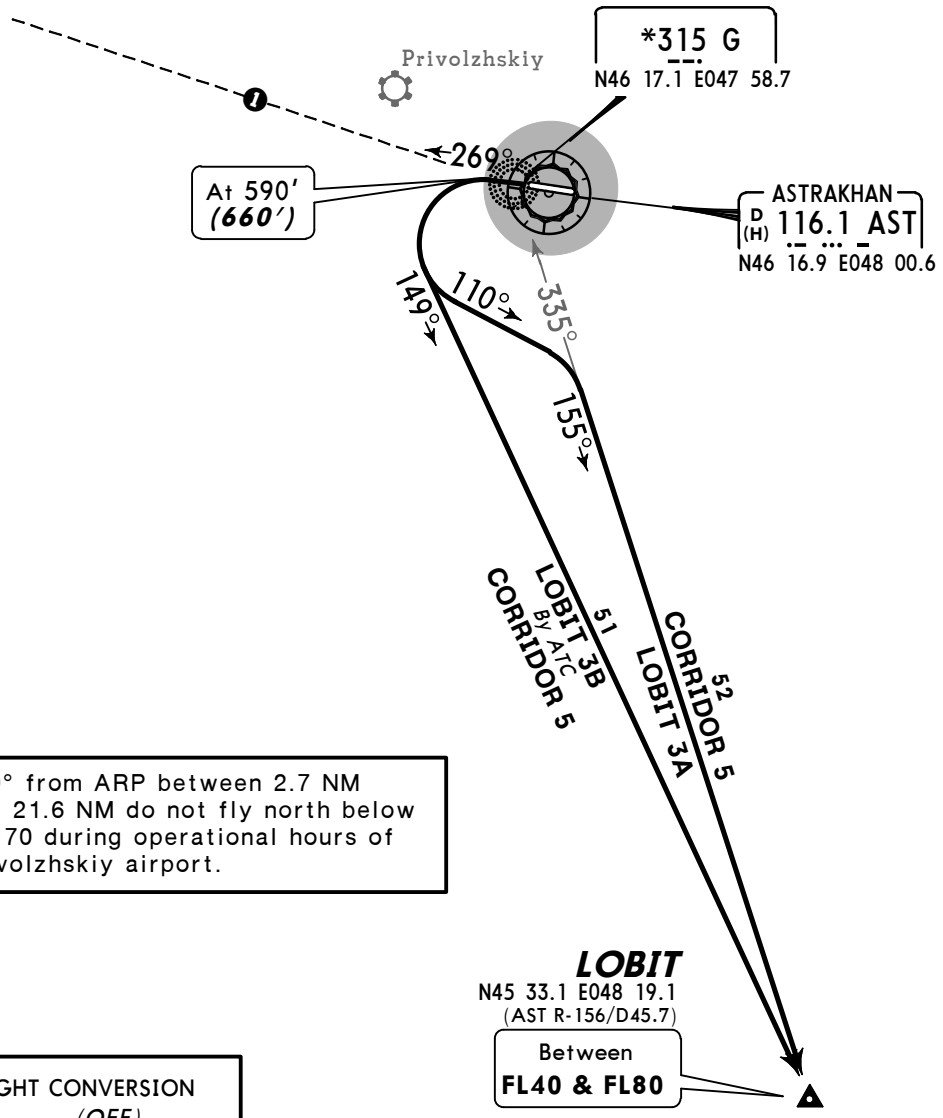

❶ 280° from ARP between 2.7 NM and 21.6 NM do not fly north below FL170 during operational hours of Privolzhskiy airport.

ALT/HEIGHT CONVERSION

QNH	(QFE)
590′	***(660′ - 200m)***
1910′	***(1980′ - 600m)***

SID	ROUTING
LOBIT 3A	Climb straight ahead to 590′ (660′), turn LEFT, 110° track, intercept 155° bearing from G to LOBIT.
LOBIT 3B	Climb straight ahead to 590′ (660′), turn LEFT, 149° track to LOBIT.

CHANGES: SIDs OMIRA 3A & 3B withdrawn; AST commissioned.

© JEPPESEN, 2011, 2012. ALL RIGHTS RESERVED.

Apt Elev **-65′** (BELOW SEA LEVEL)
N46 17.0 E048 00.4

ATIS	ASTRAKHAN Tower (TWR/GND)
125.62 (Russian 131.5)	118.6

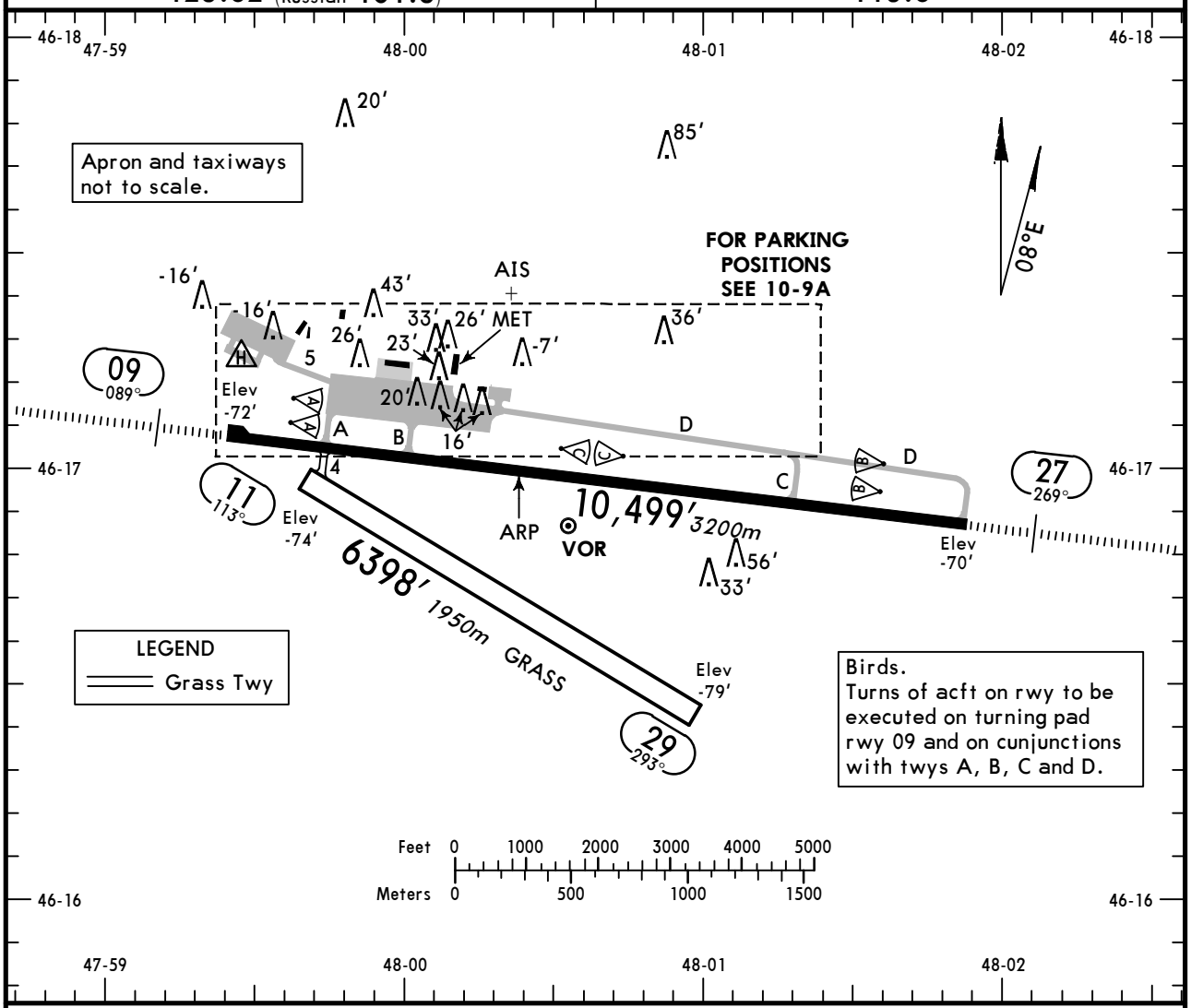

ADDITIONAL RUNWAY INFORMATION

RWY		USABLE LENGTHS — LANDING BEYOND — Threshold	Glide Slope	TAKE-OFF	WIDTH
09 / 27	HIRL *(58m)* HIALS PAPI-L (angle 3.0°) RVR		9588′ *2922m*	❶	148′ *45m*
11 / 29					328′ *100m*

❶ TAKE-OFF RUN AVAILABLE

RWY 09:

From rwy head	10,499′ (3200m)
twy A int	9058′ (2761m)
twy B int	7867′ (2398m)

RWY 27:

From rwy head	10,499′ (3200m)
twy C int	8202′ (2500m)

TAKE-OFF

AIR CARRIER (JAA)

Rwy 09/27

	LVP must be in force RCLM (DAY only) or RL	RCLM (DAY only) or RL
A	*250m*	*400m*
B		
C		
D	*300m*	

CHANGES: None.

© JEPPESEN, 1999, 2011. ALL RIGHTS RESERVED.

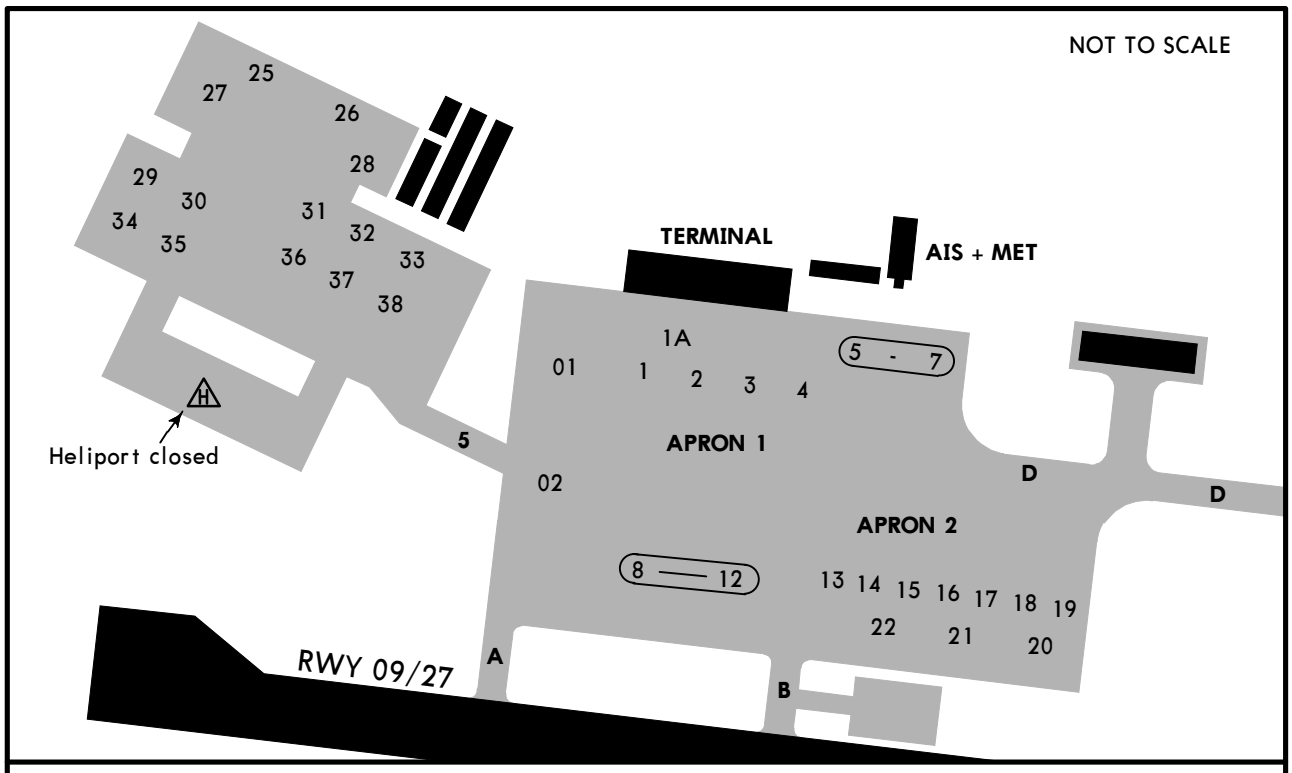

Taxiing into stands 1, 1A & 2 via Twy A, via Twy B only by ATC.
Taxiing of IL-76 acft into and out of stands 20, 21 & 22 by ATC only.
Taxiing along Twy 5 is only by towing.
Taxiing out from stands 1 thru 7 only by towing.
Acft with wingspan up to 105'/32m shall be escorted by follow me car at NIGHT.
When VIS is less than 400m acft shall be escorted by follow me car.
Parking stands 01, 02, 1 thru 8, 13 thru 19, 25 thru 38 available for helicopters.

© JEPPESEN, 1999, 2011. ALL RIGHTS RESERVED.

ASTRAKHAN, RUSSIA

ASTRAKHAN

STRAIGHT-IN RWY		A	B	C	D
09	ILS	**128**′(200′)	**128**′(200′)	**128**′(200′)	**128**′(200′)
	FULL	**R550m**	**R550m**	**R550m**	**R550m**
	Limited	R750m	R750m	R750m	R750m
	ALS out	R1200m	R1200m	R1200m	R1200m
	LOC	NOT AUTH	NOT AUTH	NOT AUTH	NOT AUTH
	2 NDB ❶	**340**′(412′)	**340**′(412′)	**340**′(412′)	**340**′(412′)
		R1200m	**R1200m**	**R1200m**	**R1200m**
	ALS out	R1500m	R1500m	R1900m	R1900m
	NDB ❶	**410**′(482′)	**410**′(482′)	**410**′(482′)	**410**′(482′)
	(with FAF)	**R1500m**	**R1500m**	**R1500m**	**R1500m**
	ALS out	R1500m	R1500m	C2300m	C2300m
	NDB ❶❷	**660**′(732′)	**660**′(732′)	**660**′(732′)	**660**′(732′)
	(w/o FAF)	**R1500m**	**R1500m**	**C2400m**	**C2400m**
	NDB ❸	**660**′(732′)	**660**′(732′)	**660**′(732′)	**660**′(732′)
	(w/o FAF)	**C2900m**	**C2900m**	**C3100m**	**C3100m**
	ALS out	C3600m	C3600m	C3800m	C3800m
27	ILS	**130**′(200′)	**130**′(200′)	**130**′(200′)	**130**′(200′)
	FULL	**R550m**	**R550m**	**R550m**	**R550m**
	Limited	R750m	R750m	R750m	R750m
	ALS out	R1200m	R1200m	R1200m	R1200m
	LOC	NOT AUTH	NOT AUTH	NOT AUTH	NOT AUTH
	NDB DME ❶	**410**′(480′)	**410**′(480′)	**410**′(480′)	**410**′(480′)
	(with FAF)	**R1500m**	**R1500m**	**R1500m**	**R1500m**
	ALS out	R1500m	R1500m	C2200m	C2200m
	NDB DME ❶❷	**650**′(720′)	**650**′(720′)	**650**′(720′)	**650**′(720′)
	(w/o FAF)	**R1500m**	**R1500m**	**C2400m**	**C2400m**
	NDB DME ❸	**650**′(720′)	**650**′(720′)	**650**′(720′)	**650**′(720′)
	(w/o FAF)	**C2800m**	**C2800m**	**C3000m**	**C3000m**
	ALS out	C3500m	C3500m	C3700m	C3700m
	NDB ❶	**410**′(480′)	**410**′(480′)	**410**′(480′)	**410**′(480′)
	(with FAF)	**R1500m**	**R1500m**	**R1500m**	**R1500m**
	ALS out	R1500m	R1500m	C2200m	C2200m
	NDB	**650**′(720′)	**650**′(720′)	**650**′(720′)	**650**′(720′)
	(w/o FAF)	**C2800m**	**C2800m**	**C3000m**	**C3000m**
	ALS out	C3500m	C3500m	C3700m	C3700m

❶ Continuous Descent Final Approach.
❷ With FMS.
❸ W/o FMS.

TAKE-OFF RWY 09, 27

	LVP must be in Force RCLM (DAY only) or RL	RCLM (DAY only) or RL	NIL (DAY only)
A, B, C	250m	400m	500m
D	300m		

© JEPPESEN, 2009, 2012. ALL RIGHTS RESERVED.

ASTRAKHAN, RUSSIA
❶ILS or 2 NDB Rwy 09

BRIEFING STRIP

ATIS	ASTRAKHAN Approach (APP/SRE)	ASTRAKHAN Krug (SRE)	ASTRAKHAN Tower (TWR/GND)
125.62 (Russian 131.5)	126.0	120.6	118.6

LOC IGV *110.3	Final Apch Crs 089°	GS LOM 650′ (722′)	ILS DA(H) 128′ (200′)	Apt Elev -65′ (BELOW SEA LEVEL)
NDB G *315		Minimum Alt D4.8 AST 1250′ (1322′)	NDB MDA(H) 340′ (412′)	RWY -72′

1800′
MSA G NDB

MISSED APCH: Climb on 089° to 590′ (662′), then turn RIGHT onto 269° climbing to 1910′ (1982′), then as directed.

Alt Set: MM (hPa on req) QNH on req (QFE) Trans level: FL 40 Trans alt: 1910′ (1982′)
Heavy turbulence with downdrafts and wind shear may be expected on final.

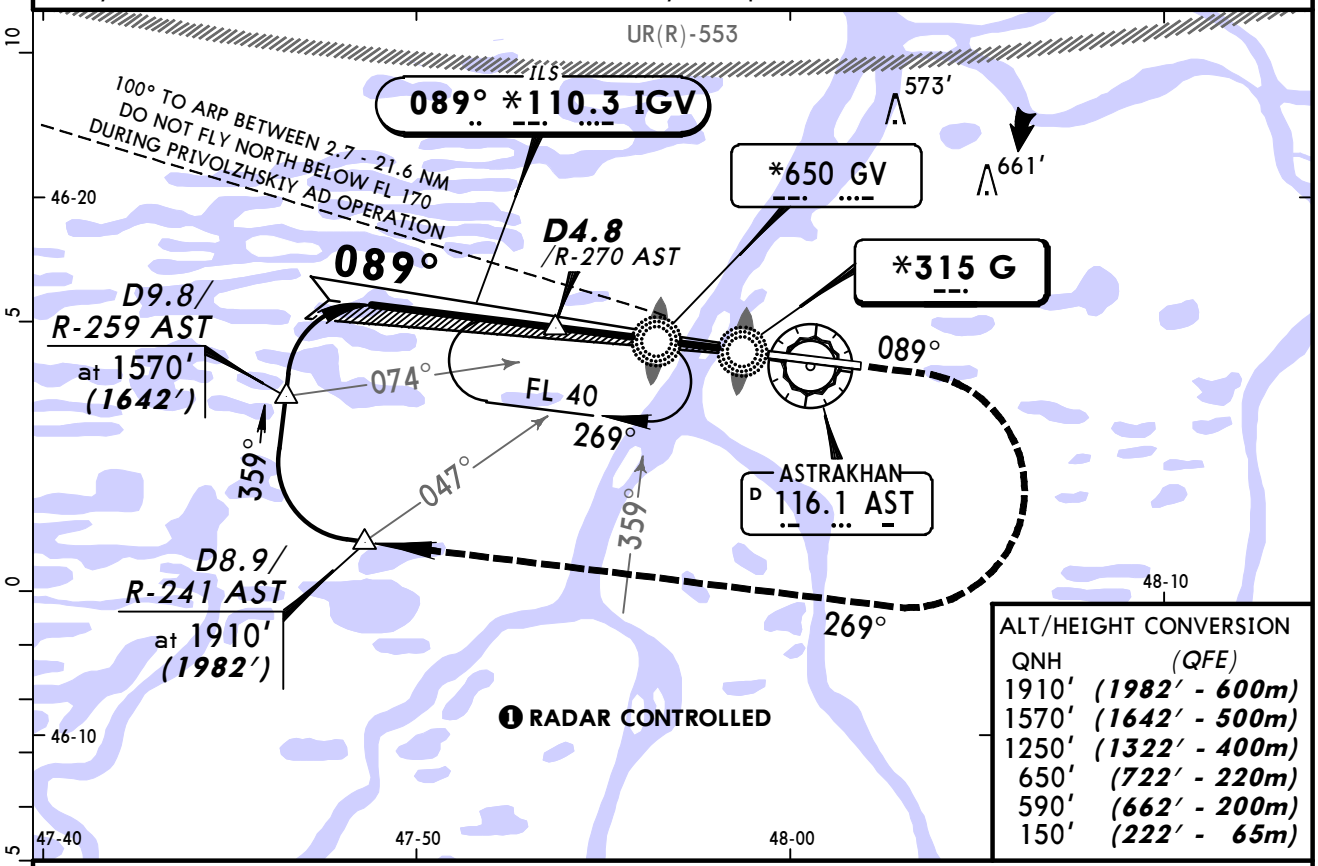

ALT/HEIGHT CONVERSION

QNH	(QFE)
1910′	(1982′ - 600m)
1570′	(1642′ - 500m)
1250′	(1322′ - 400m)
650′	(722′ - 220m)
590′	(662′ - 200m)
150′	(222′ - 65m)

NDB apch: Pass LMM not below 150′(222′).

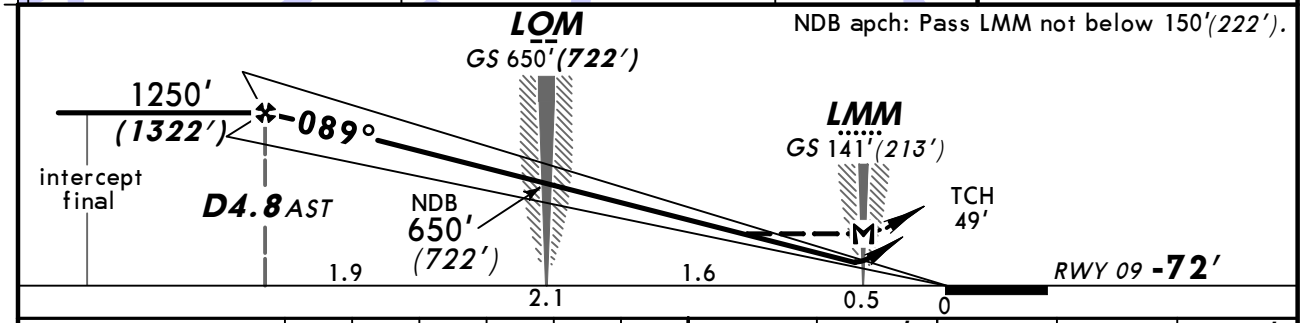

Gnd speed-Kts	70	90	100	120	140	160
ILS GS or NDB Desc angle 3.00°	372	478	531	637	743	849
MAP at LMM						

HIALS
PAPI

590′ (662′) on 089°

269° RT

1910′ (1982′)

STRAIGHT-IN LANDING RWY 09

PANS OPS

	ILS DA(H) 128′ (200′) FULL	ILS DA(H) 128′ (200′) ALS out	LOC (GS out)	NDB MDA(H) 340′ (412′)	NDB MDA(H) 340′ (412′) ALS out
A	RVR 720m VIS 800m	1200m	NOT AUTH	1200m	RVR 1500m VIS 1600m
B					
C					RVR 1800m VIS 2000m
D				RVR 1500m VIS 1600m	

CHANGES: Procedure.

© JEPPESEN, 1999, 2012. ALL RIGHTS RESERVED.

BRIEFING STRIP

ATIS	ASTRAKHAN Approach (APP/SRE)	ASTRAKHAN Krug (SRE)	ASTRAKHAN Tower (TWR/GND)
125.62 (Russian 131.5)	126.0	120.6	118.6

LOC IGV *110.3	Final Apch Crs 089°	GS LOM 650′ (722′)	ILS DA(H) 128′ (200′)	Apt Elev -65′ (BELOW SEA LEVEL)	1800′
NDB G *315		Minimum Alt D4.8 AST 1250′ (1322′)	NDB MDA(H) 340′ (412′)	RWY -72′	MSA G NDB

MISSED APCH: Climb on 089° to 590′ (662′), then turn RIGHT to ZG NDB climbing to FL 40, or as directed.

Alt Set: MM (hPa on req) QNH on req (QFE) Trans level: FL 40 Trans alt: 1910′ (1982′)

1. Procedure restricted to 225 KT.
2. Heavy turbulence with downdrafts and wind shear may be expected on final.

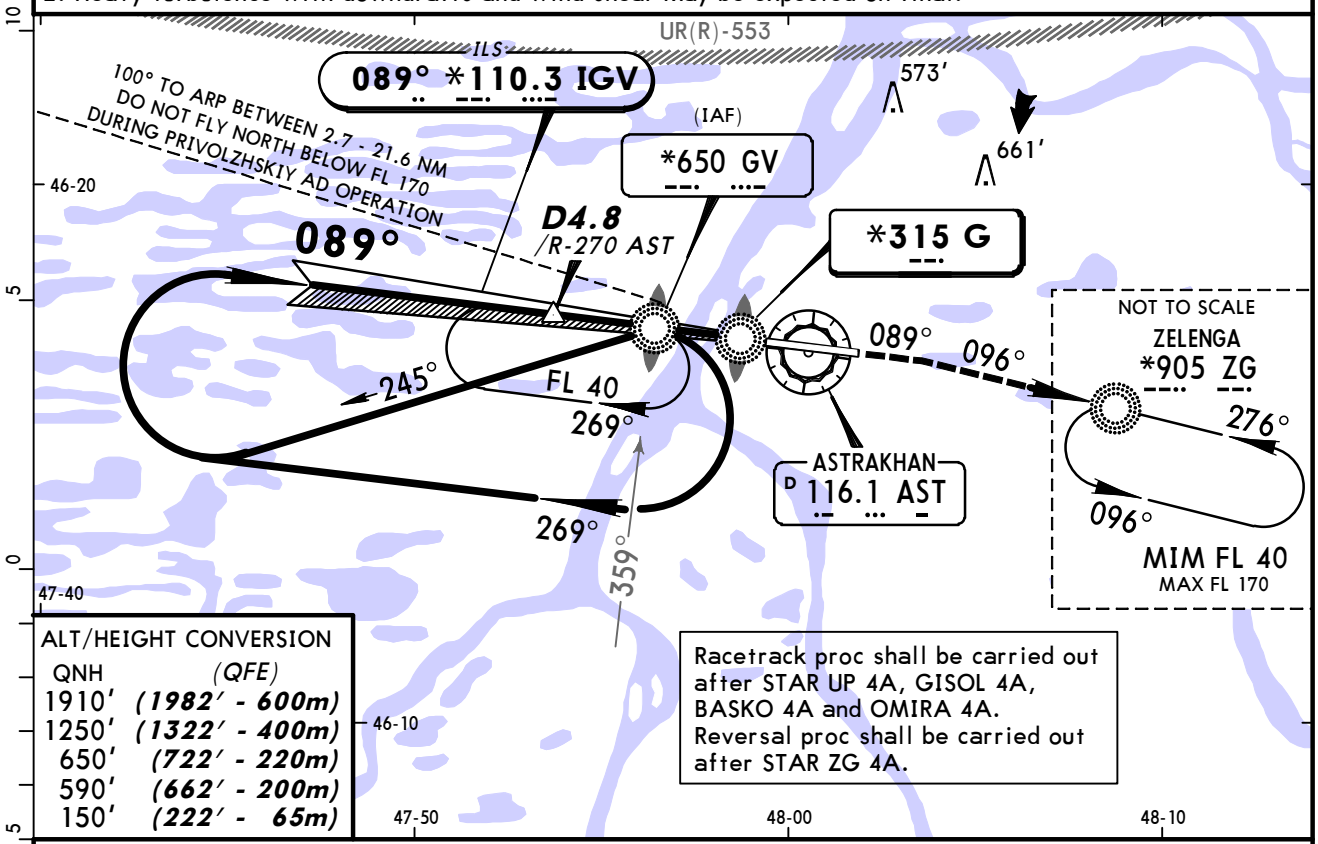

ALT/HEIGHT CONVERSION

QNH	(QFE)
1910′	(1982′ - 600m)
1250′	(1322′ - 400m)
650′	(722′ - 220m)
590′	(662′ - 200m)
150′	(222′ - 65m)

Racetrack proc shall be carried out after STAR UP 4A, GISOL 4A, BASKO 4A and OMIRA 4A. Reversal proc shall be carried out after STAR ZG 4A.

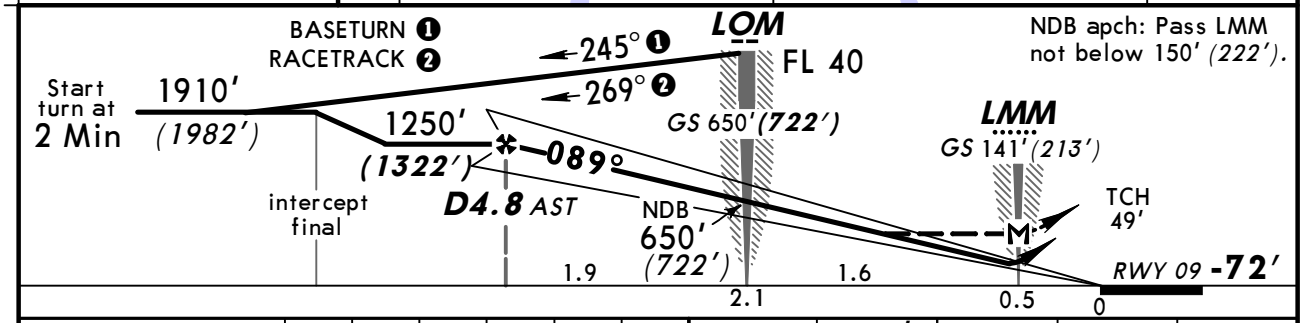

Gnd speed-Kts	70	90	100	120	140	160	HIALS / PAPI	590′ (662′) on 089°	FL 40 RT	ZG 905
ILS GS or NDB Desc angle 3.00°	372	478	531	637	743	849				
MAP at LMM										

STRAIGHT-IN LANDING RWY 09

	ILS DA(H) 128′ (200′) FULL	ILS DA(H) 128′ (200′) ALS out	LOC (GS out)	NDB MDA(H) 340′ (412′)	NDB MDA(H) 340′ (412′) ALS out
A	see 11-3		NOT AUTH	see 11-3	
B					
C	RVR 720m VIS 800m	1200m		1200m	RVR 1800m VIS 2000m
D				RVR 1500m VIS 1600m	

PANS OPS

CHANGES: Procedure.

© JEPPESEN, 2011, 2012. ALL RIGHTS RESERVED.

BRIEFING STRIP

ATIS	ASTRAKHAN Approach (APP/SRE)	ASTRAKHAN Krug (SRE)	ASTRAKHAN Tower (TWR/GND)
125.62 (Russian 131.5)	126.0	120.6	118.6

LOC IGV *110.3	Final Apch Crs 089°	GS LOM 650′ (722′)	ILS DA(H) 128′ (200′)	Apt Elev -65′ (BELOW SEA LEVEL)	1800′
NDB G *315		Minimum Alt D4.8 AST 1250′ (1322′)	NDB MDA(H) 340′ (412′)	RWY -72′	MSA G NDB

MISSED APCH: Climb on 089° to 590′ (662′), then turn RIGHT to ZG NDB climbing to FL 40, or as directed.

Alt Set: MM (hPa on req) QNH on req **(QFE)** Trans level: FL 40 Trans alt: 1910′ **(1982′)**
Heavy turbulence with downdrafts and wind shear may be expected on final.

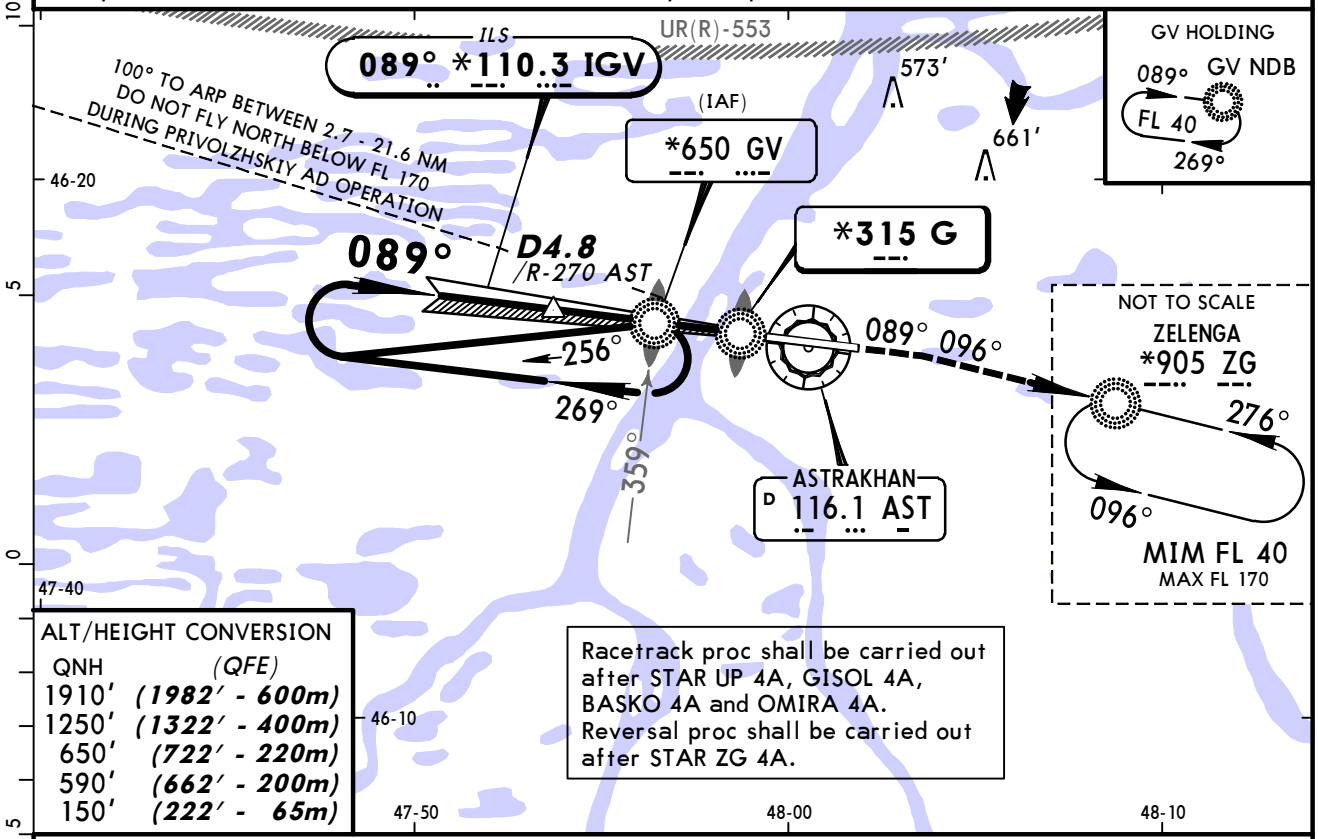

ALT/HEIGHT CONVERSION

QNH	(QFE)
1910′	(1982′ - 600m)
1250′	(1322′ - 400m)
650′	(722′ - 220m)
590′	(662′ - 200m)
150′	(222′ - 65m)

Racetrack proc shall be carried out after STAR UP 4A, GISOL 4A, BASKO 4A and OMIRA 4A.
Reversal proc shall be carried out after STAR ZG 4A.

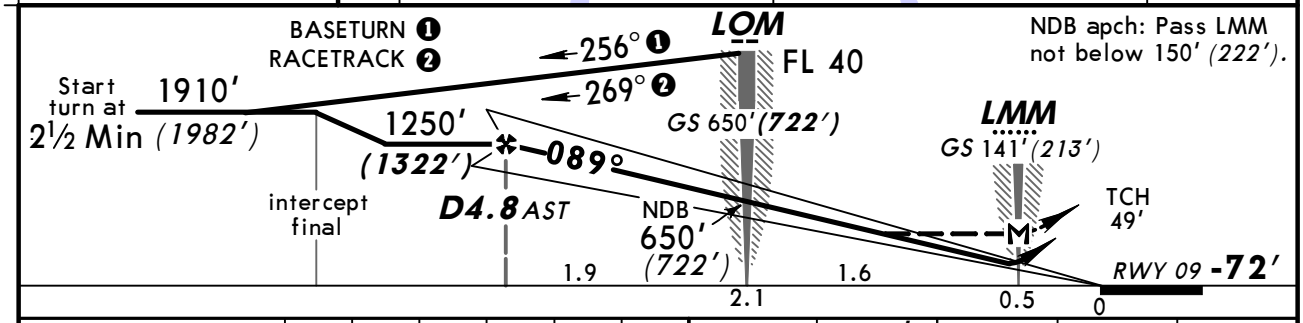

Gnd speed-Kts	70	90	100	120	140	160
ILS GS or NDB Desc angle 3.00°	372	478	531	637	753	849
MAP at LMM						

HIALS PAPI | 590′ (662′) on 089° | FL 40 RT | ZG 905

PANS OPS

STRAIGHT-IN LANDING RWY 09

	ILS DA(H) 128′ (200′) FULL	ILS DA(H) 128′ (200′) ALS out	LOC (GS out)	NDB MDA(H) 340′ (412′)	NDB MDA(H) 340′ (412′) ALS out
A	RVR 720m VIS 800m	1200m	NOT AUTH	1200m	RVR 1500m VIS 1600m
B					
C	see 11-2			see 11-2	
D					

CHANGES: FAF. Note.

© JEPPESEN, 2011, 2012. ALL RIGHTS RESERVED.

ASTRAKHAN, RUSSIA
❶ ILS DME Rwy 27

BRIEFING STRIP

ATIS	ASTRAKHAN Approach (APP/SRE)	ASTRAKHAN Krug (SRE)	ASTRAKHAN Tower (TWR/GND)
125.62 (Russian 131.5)	126.0	120.6	118.6

LOC IBJ	Final Apch Crs	GS D2.2 IBJ	ILS DA(H)	Apt Elev -65' (BELOW SEA LEVEL) RWY -70'
*110.5	269°	668' (738')	130' (200')	

MISSED APCH: Climb on 269° to 590' (660'), then turn LEFT onto 089° climbing to 1910' (1980'), then as directed.

1800'
MSA G NDB

Alt Set: MM (hPa on req) QNH on req **(QFE)** Trans level: FL 40 Trans alt: 1910' **(1980')**
Heavy turbulence with downdrafts and wind shear may be expected on final.

ILS DME reads zero at rwy 27 threshold.

❶ **RADAR CONTROLLED**

ALT/HEIGHT CONVERSION

QNH	(QFE)
1910'	(1980' - 600m)
1580'	(1650' - 500m)
1250'	(1320' - 400m)
590'	(660' - 200m)

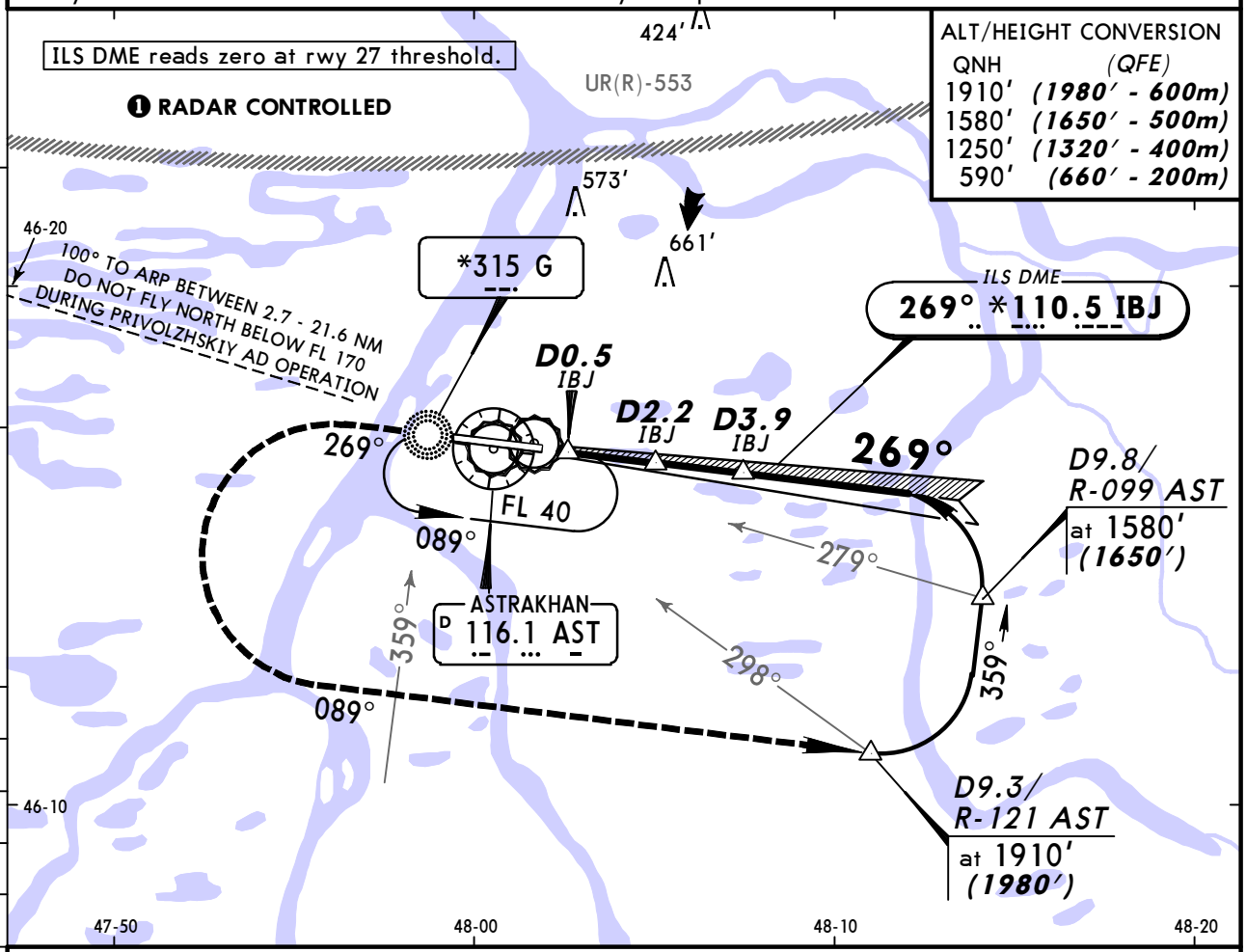

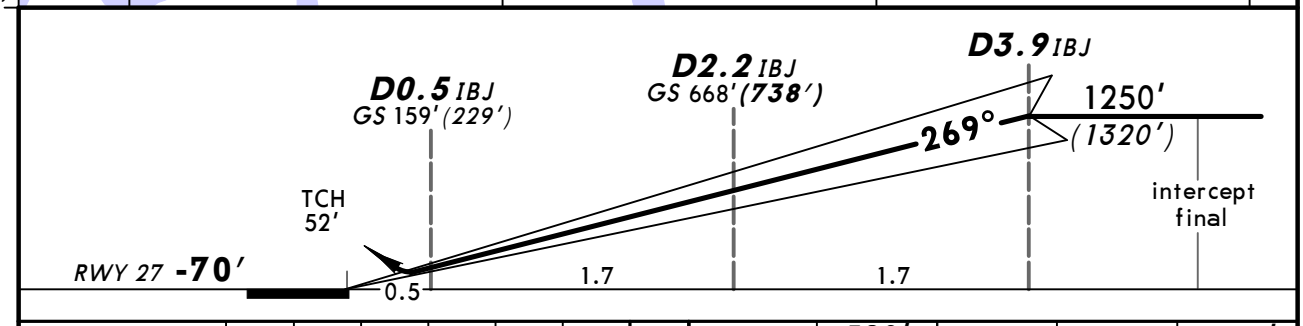

Gnd speed-Kts	70	90	100	120	140	160
GS 3.00°	372	478	531	637	743	849

HIALS
PAPI
590' (660') on 269°
089° LT
1910' (1980')

STRAIGHT-IN LANDING RWY 27

	ILS DA(H) 130' (200') FULL	ILS DA(H) 130' (200') ALS out	LOC (GS out)
A	RVR 720m VIS 800m	1200m	NOT AUTHORIZED
B			
C			
D			

PANS OPS

CHANGES: Procedure.

© JEPPESEN, 2011, 2012. ALL RIGHTS RESERVED.

BRIEFING STRIP

ATIS	ASTRAKHAN Approach (APP/SRE)	ASTRAKHAN Krug (SRE)	ASTRAKHAN Tower (TWR/GND)
125.62 (Russian 131.5)	126.0	120.6	118.6

LOC IBJ	Final Apch Crs	GS D2.2 IBJ	ILS DA(H)	Apt Elev -65' (BELOW SEA LEVEL)
*110.5	269°	668' (738')	130' (200')	RWY -70'

MISSED APCH: Climb on 269° to 590' (660'), then turn LEFT to ZG NDB climbing to FL 40, or as directed.

1800'
MSA G NDB

Alt Set: MM (hPa on req) QNH on req **(QFE)** Trans level: FL 40 Trans alt: 1910' **(1980')**
Heavy turbulence with downdrafts and wind shear may be expected on final.

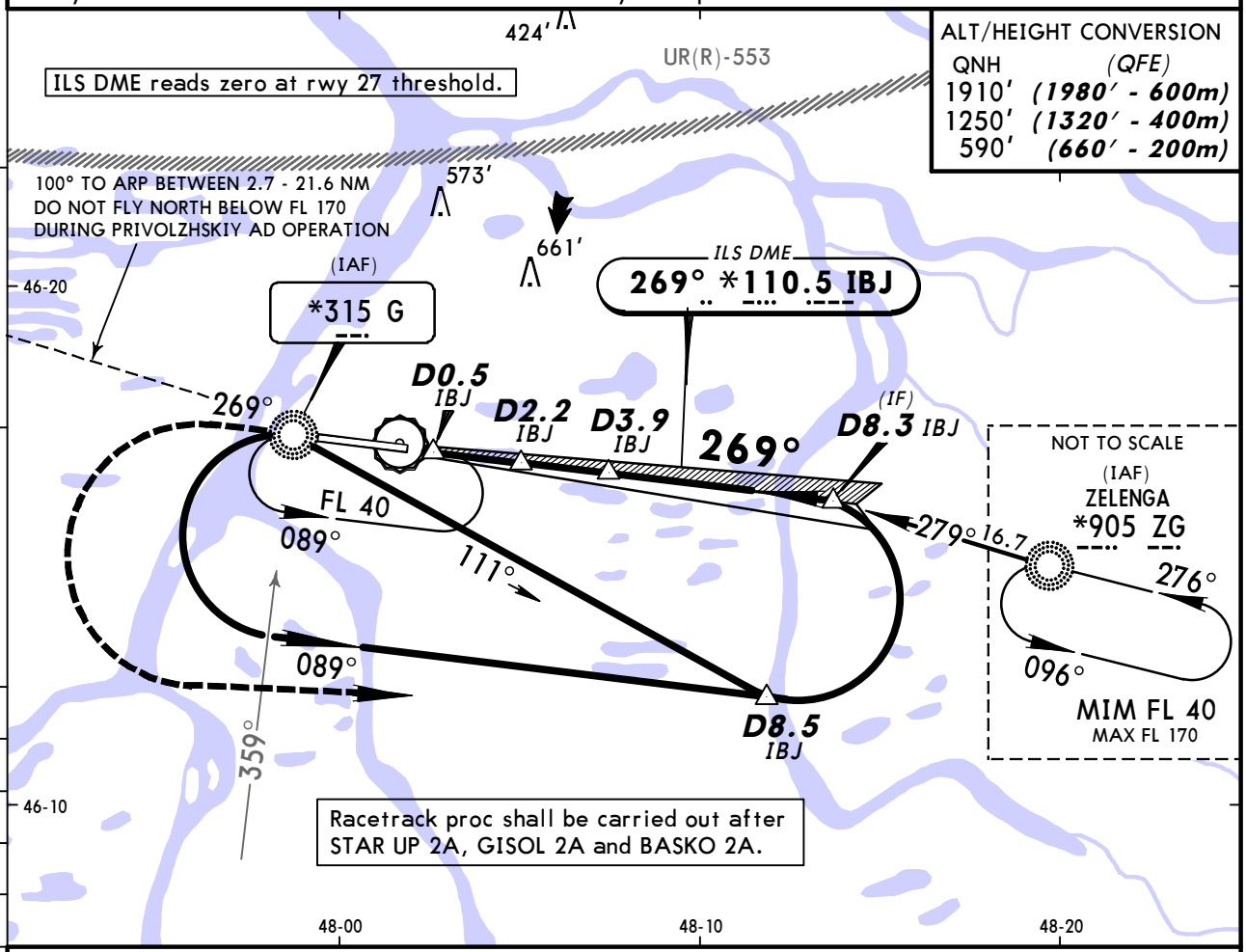

ALT/HEIGHT CONVERSION

QNH	(QFE)
1910'	(1980' - 600m)
1250'	(1320' - 400m)
590'	(660' - 200m)

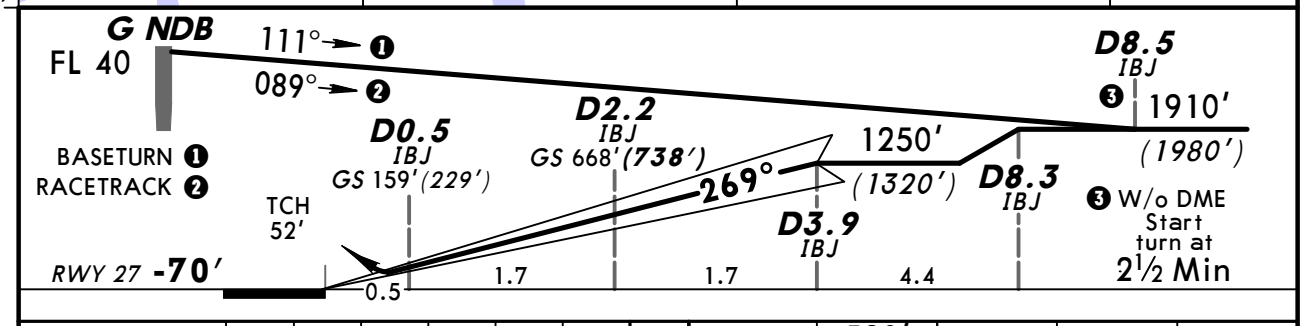

Gnd speed-Kts	70	90	100	120	140	160
GS 3.00°	372	478	531	637	743	849

HIALS
PAPI
590' (660') on 269°
FL 40
LT
ZG 905

STRAIGHT-IN LANDING RWY 27

ILS DA(H) 130' (200') FULL	ILS DA(H) 130' (200') ALS out	LOC (GS out)
see 11-6		NOT AUTHORIZED
RVR 720m VIS 800m	1200m	

PANS OPS
A
B
C
D

CHANGES: None.

© JEPPESEN, 2011. ALL RIGHTS RESERVED.

BRIEFING STRIP

ATIS	ASTRAKHAN Approach (APP/SRE)	ASTRAKHAN Krug (SRE)	ASTRAKHAN Tower (TWR/GND)
125.62 (Russian 131.5)	126.0	120.6	118.6

LOC IBJ	Final Apch Crs	GS D2.2 IBJ	ILS DA(H)	Apt Elev -65′ (BELOW SEA LEVEL)
*110.5	269°	668′ (738′)	130′ (200′)	RWY -70′

1800′
MSA G NDB

MISSED APCH: Climb on 269° to 590′ (660′), then turn LEFT to ZG NDB climbing to FL 40, or as directed.

Alt Set: MM (hPa on req) QNH on req **(QFE)** Trans level: FL 40 Trans alt: 1910′ **(1980′)**
Heavy turbulence with downdrafts and wind shear may be expected on final.

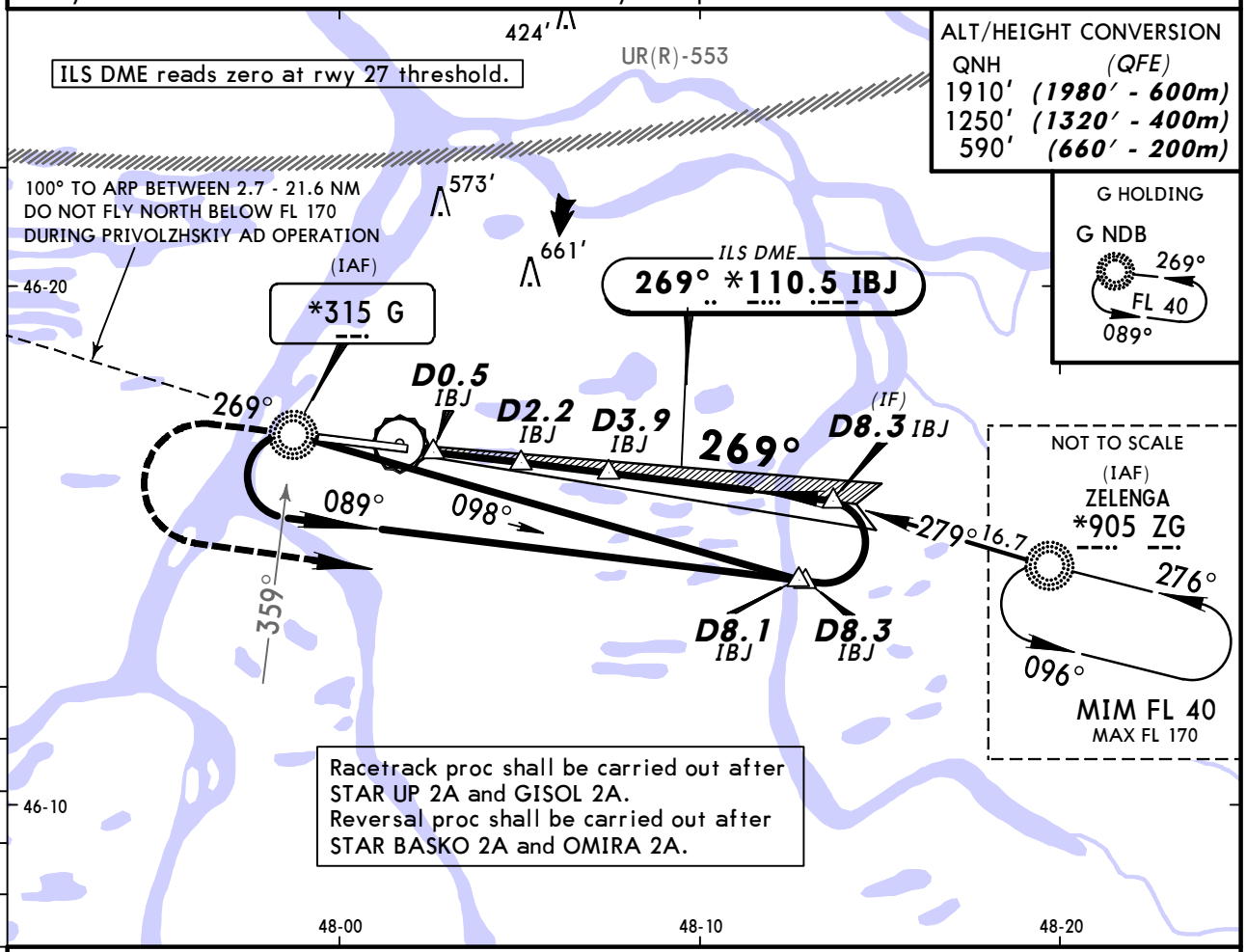

ALT/HEIGHT CONVERSION

QNH	(QFE)
1910′	(1980′ - 600m)
1250′	(1320′ - 400m)
590′	(660′ - 200m)

G HOLDING

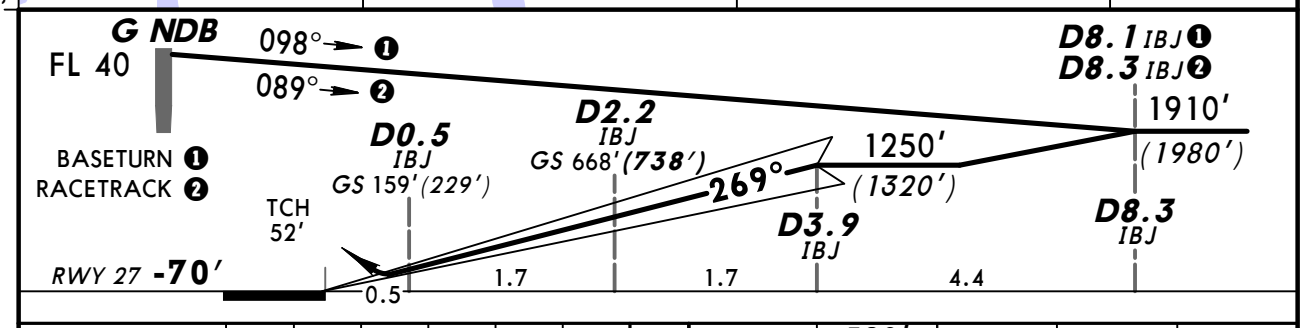

Gnd speed-Kts	70	90	100	120	140	160
GS 3.00°	372	478	531	637	743	849

HIALS
PAPI
590′ (660′) on 269°
FL 40
LT
ZG 905

STRAIGHT-IN LANDING RWY 27

	ILS DA(H) 130′ (200′) FULL	ILS DA(H) 130′ (200′) ALS out	LOC (GS out)
A	RVR 720m VIS 800m	1200m	NOT AUTHORIZED
B			
C	see 11-5		
D			

PANS OPS

CHANGES: Note.

© JEPPESEN, 2011, 2012. ALL RIGHTS RESERVED.

BRIEFING STRIP

ATIS	ASTRAKHAN Approach (APP/SRE)	ASTRAKHAN Krug (SRE)	ASTRAKHAN Tower (TWR/GND)
125.62 (Russian 131.5)	126.0	120.6	118.6

NDB	Final Apch Crs	Minimum Alt	MDA(H) (CONDITIONAL)	Apt Elev -65' (BELOW SEA LEVEL)
G *315	089°	D4.8 1250' (1322')	410' (482')	RWY -72'

1800'
MSA G NDB

MISSED APCH: Climb on 089° to 920' (992'), then turn RIGHT onto 269° climbing to 1910' (1982'), then as directed.

Alt Set: MM (hPa on req) QNH on req **(QFE)** Trans level: FL 40 Trans alt: 1910' (1982')
Heavy turbulence with downdrafts and wind shear may be expected on final.

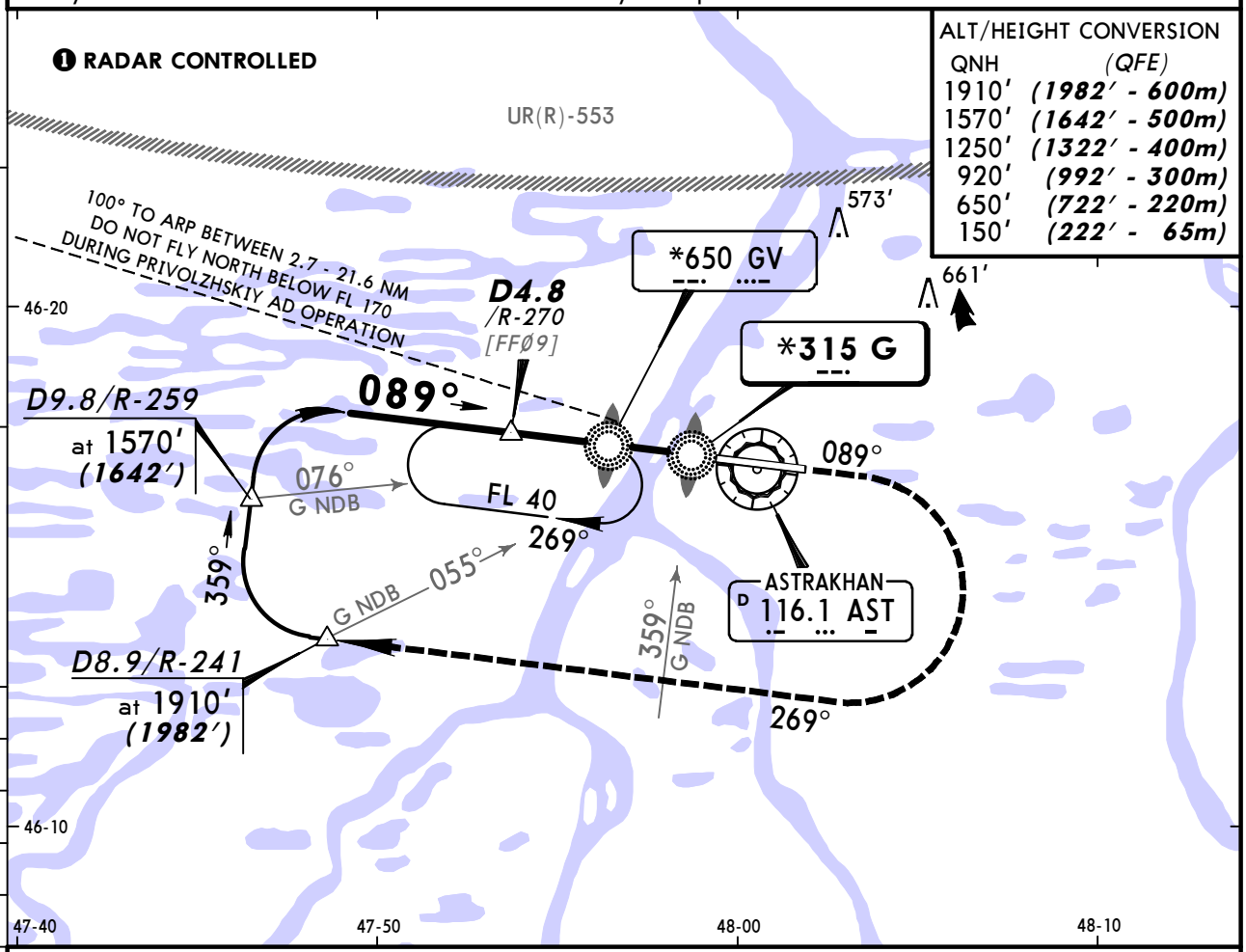

ALT/HEIGHT CONVERSION

QNH	(QFE)
1910'	(1982' - 600m)
1570'	(1642' - 500m)
1250'	(1322' - 400m)
920'	(992' - 300m)
650'	(722' - 220m)
150'	(222' - 65m)

Pass LMM not below 150'(222').

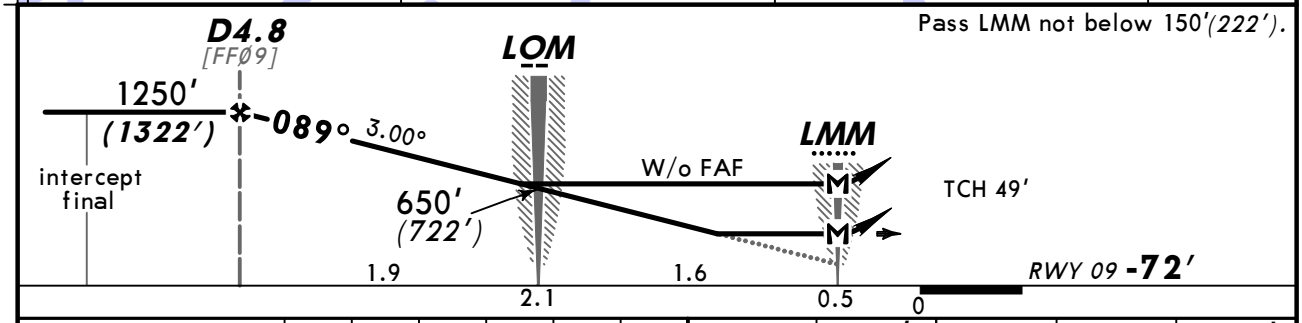

Gnd speed-Kts		70	90	100	120	140	160
Descent angle	3.00°	372	478	531	637	743	849
MAP at LMM							

HIALS
PAPI

920' (992') on 089° | 269° RT | 1910' (1982')

STRAIGHT-IN LANDING RWY 09

	With FAF MDA(H) 410' (482')		W/o FAF MDA(H) 660' (732')	
		ALS out		ALS out
A	1200m	RVR 1500m VIS 1600m	1200m	RVR 1500m VIS 1600m
B				
C		RVR 1800m VIS 2000m	2400m	3200m
D	RVR 1800m VIS 2000m	2400m	3200m	3600m

PANS OPS

CHANGES: Procedure.

© JEPPESEN, 2011, 2012. ALL RIGHTS RESERVED.

BRIEFING STRIP

ATIS	ASTRAKHAN Approach (APP/SRE)	ASTRAKHAN Krug (SRE)	ASTRAKHAN Tower (TWR/GND)
125.62 (Russian 131.5)	126.0	120.6	118.6

NDB G	Final Apch Crs	Minimum Alt	MDA(H) (CONDITIONAL)	Apt Elev -65' (BELOW SEA LEVEL)
*315	089°	D4.8 1250' (1322')	410' (482')	RWY -72'

1800'
MSA G NDB

MISSED APCH: Climb on 089° to 920' (992'), then turn RIGHT to ZG NDB climbing to FL 40, or as directed.

Alt Set: MM (hPa on req) QNH on req (QFE) Trans level: FL 40 Trans alt: 1910' (1982')

1. Procedure restricted to 225 KT.
2. Heavy turbulence with downdrafts and wind shear may be expected on final.

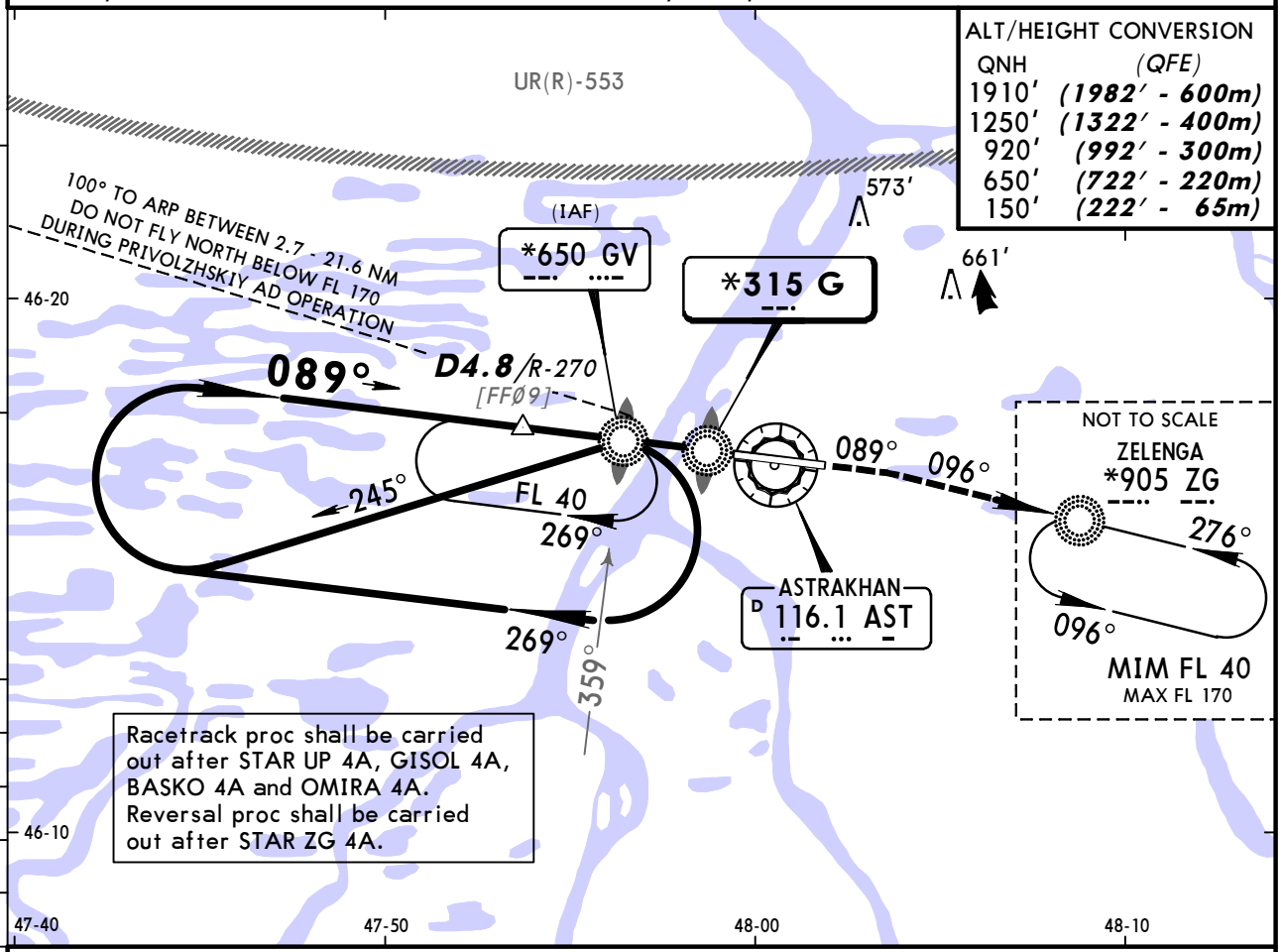

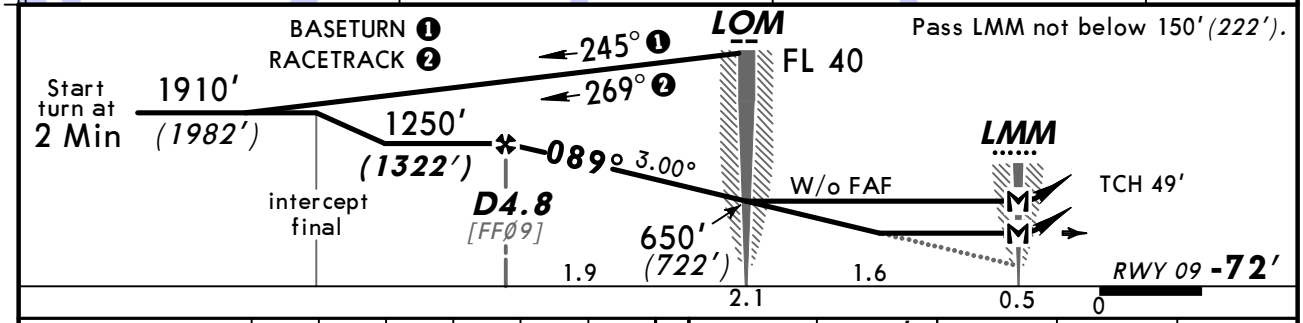

Gnd speed-Kts	70	90	100	120	140	160
Descent angle 3.00°	372	478	531	637	743	849
MAP at LMM						

HIALS
PAPI
920' (992') on 089°
FL 40
RT
ZG 905

STRAIGHT-IN LANDING RWY 09

	With FAF		W/o FAF	
	MDA(H) 410' (482')		MDA(H) 660' (732')	
		ALS out		ALS out
A	see 16-3		see 16-3	
B				
C	1200m	RVR 1800m VIS 2000m	2400m	3200m
D	RVR 1800m VIS 2000m	2400m	3200m	3600m

PANS OPS

CHANGES: FAF. Note.

© JEPPESEN, 2011, 2012. ALL RIGHTS RESERVED.

BRIEFING STRIP

ATIS	ASTRAKHAN Approach (APP/SRE)	ASTRAKHAN Krug (SRE)	ASTRAKHAN Tower (TWR/GND)
125.62 (Russian 131.5)	126.0	120.6	118.6

NDB	Final Apch Crs	Minimum Alt	MDA(H)	Apt Elev -65'
G		D4.8	(CONDITIONAL)	(BELOW SEA LEVEL)
*315	089°	1250' (1322')	410' (482')	RWY -72'

1800'

MSA G NDB

MISSED APCH: Climb on 089° to 650' (772'), then turn RIGHT to ZG NDB climbing to FL 40, or as directed.

Alt Set: MM (hPa on req) QNH on req **(QFE)** Trans level: FL 40 Trans alt: 1910' (1982')

Heavy turbulence with downdrafts and wind shear may be expected on final.

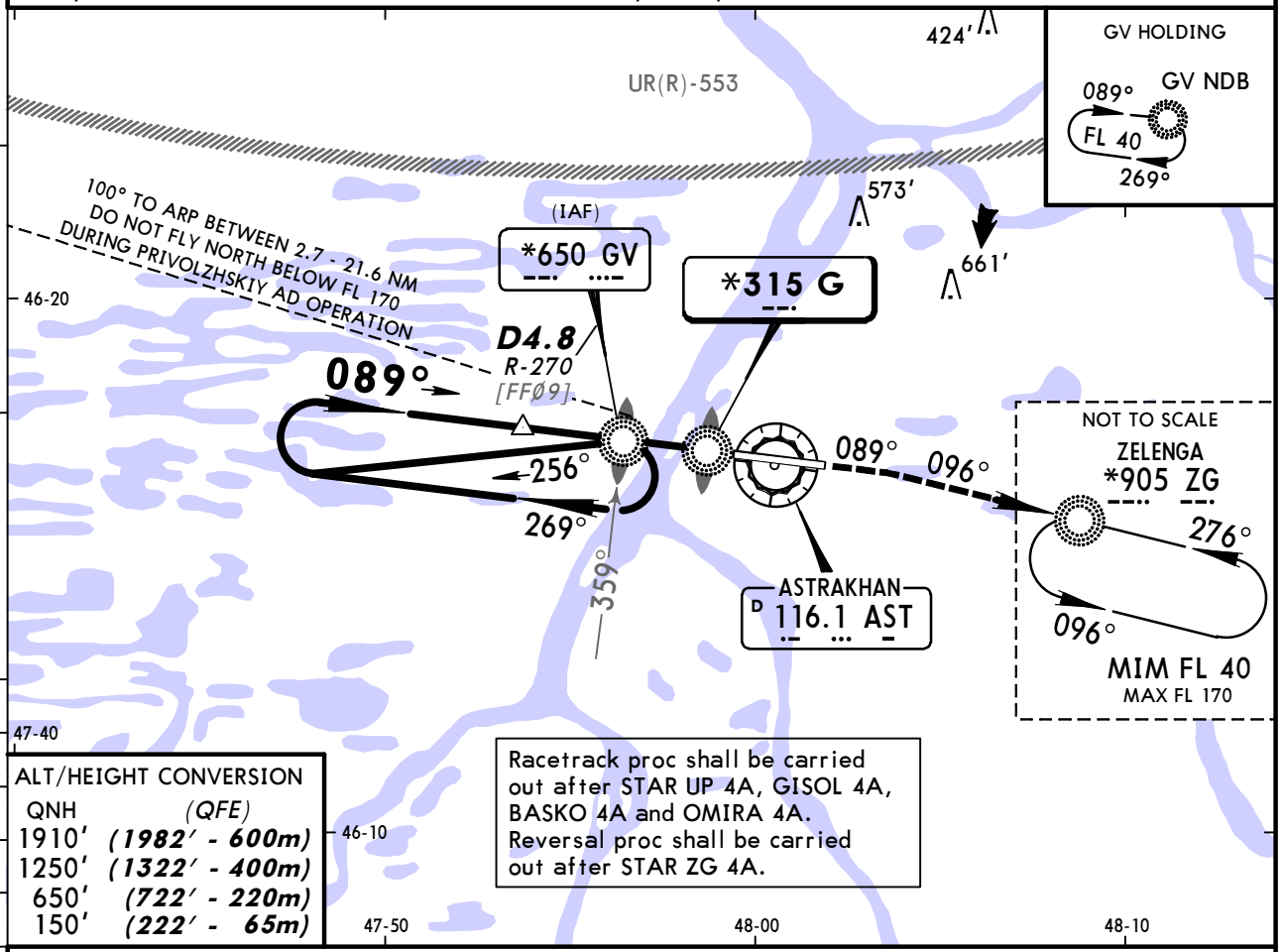

ALT/HEIGHT CONVERSION

QNH	(QFE)
1910'	(1982' - 600m)
1250'	(1322' - 400m)
650'	(722' - 220m)
150'	(222' - 65m)

Racetrack proc shall be carried out after STAR UP 4A, GISOL 4A, BASKO 4A and OMIRA 4A. Reversal proc shall be carried out after STAR ZG 4A.

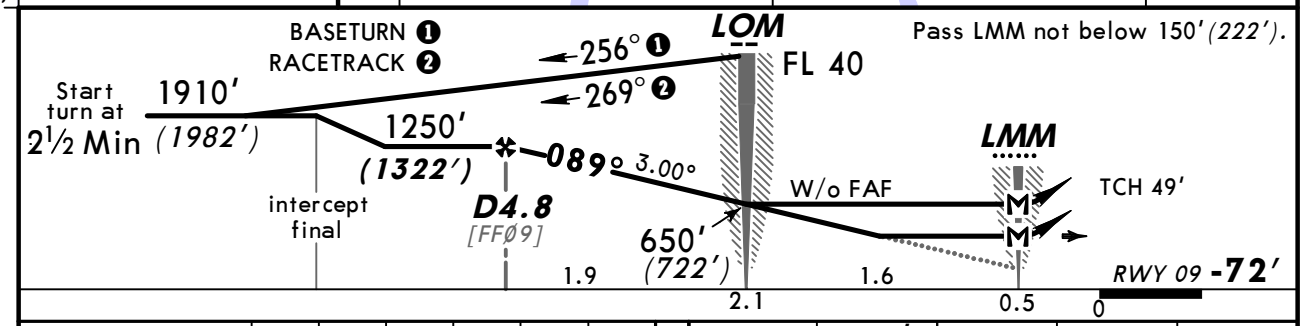

Gnd speed-Kts	70	90	100	120	140	160
Descent angle 3.00°	372	478	531	637	743	849
MAP at LMM						

HIALS
PAPI

650' (772') on 089°

FL 40
RT

ZG
905

STRAIGHT-IN LANDING RWY 09

	With FAF		W/o FAF	
	MDA(H) 410' (482')		MDA(H) 660' (732')	
		ALS out		ALS out
A	1200m	RVR 1500m	1200m	RVR 1500m
B		VIS 1600m		VIS 1600m
C	see 16-2		see 16-2	
D				

PANS OPS

CHANGES: FAF. Note.

© JEPPESEN, 2011, 2012. ALL RIGHTS RESERVED.

BRIEFING STRIP

ATIS	ASTRAKHAN Approach (APP/SRE)	ASTRAKHAN Krug (SRE)	ASTRAKHAN Tower (TWR/GND)
125.62 (Russian 131.5)	126.0	120.6	118.6

NDB G	Final Apch Crs	Minimum Alt	MDA(H) (CONDITIONAL)	Apt Elev -65′ (BELOW SEA LEVEL)
*315	269°	D4.9 1250′ (1320′)	410′ (480′)	RWY -70′

1800′
MSA G NDB

MISSED APCH: Climb on 269° to 920′ (990′), then turn LEFT onto 089° climbing to 1910′ (1980′), then as directed.

Alt Set: MM (hPa on req) QNH on req **(QFE)** Trans level: FL 40 Trans alt: 1910′ **(1980′)**
Heavy turbulence with downdrafts and wind shear may be expected on final.

❶ **RADAR CONTROLLED**

ALT/HEIGHT CONVERSION

QNH	(QFE)
1910′	(1980′ - 600m)
1580′	(1650′ - 500m)
1250′	(1320′ - 400m)
920′	(990′ - 300m)

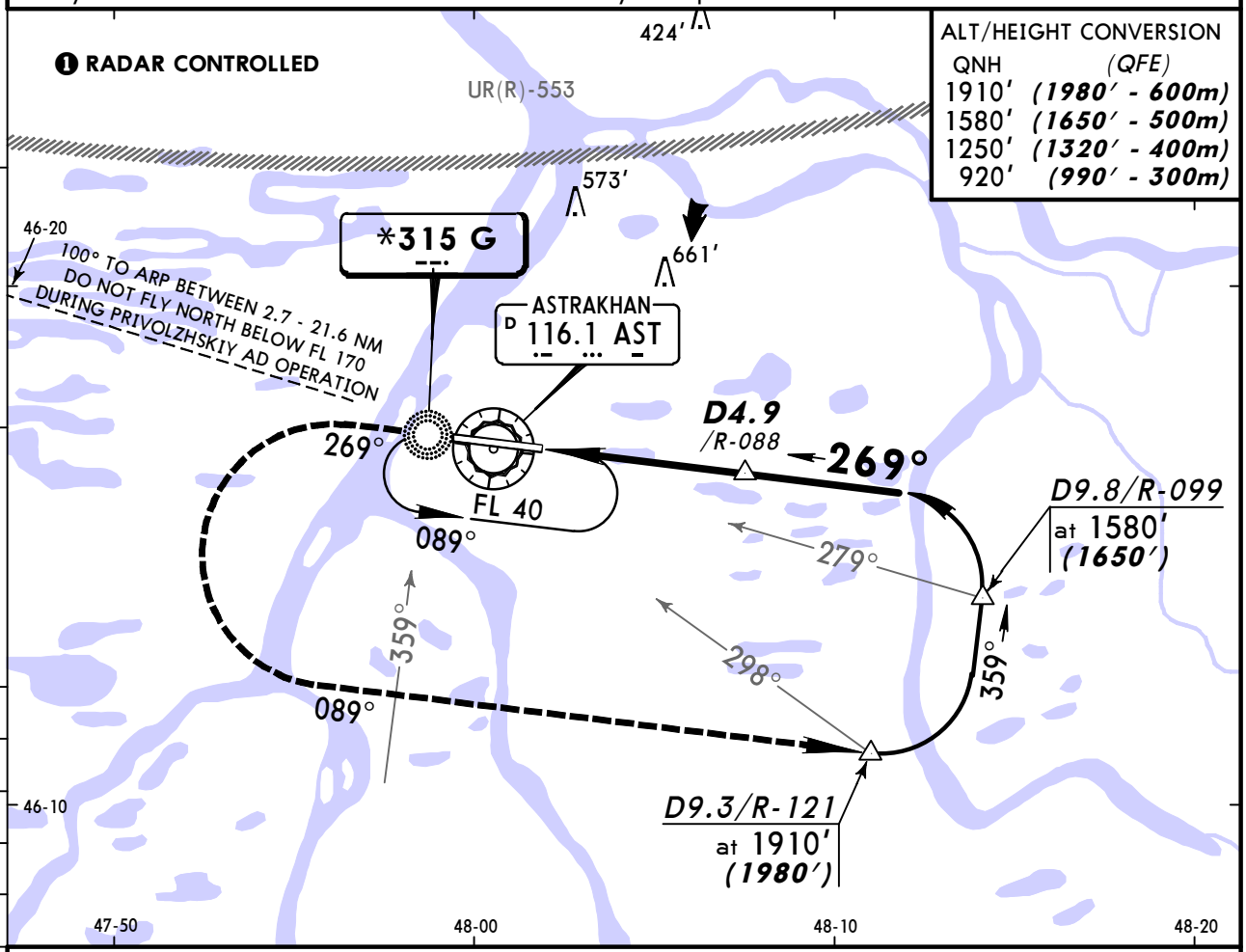

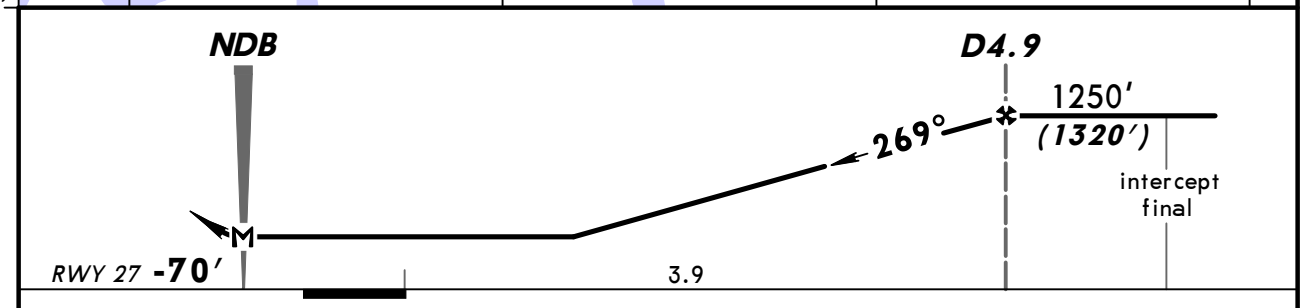

Gnd speed-Kts		70	90	100	120	140	160
Descent angle	3.00°	372	478	531	637	743	649
MAP at NDB							

HIALS
PAPI

920′ (990′) on 269°

089° LT

1910′ (1980′)

PANS OPS

STRAIGHT-IN LANDING RWY 27

	With FAF MDA(H) 410′ (480′)		W/o FAF MDA(H) 650′ (720′)	
		ALS out		ALS out
A	1200m	RVR 1500m VIS 1600m	1200m	RVR 1500m VIS 1600m
B				
C		RVR 1800m VIS 2000m	2400m	3200m
D	RVR 1800m VIS 2000m	2400m	3200m	3600m

CHANGES: Procedure.

© JEPPESEN, 2011, 2012. ALL RIGHTS RESERVED.

BRIEFING STRIP

ATIS	ASTRAKHAN Approach (APP/SRE)	ASTRAKHAN Krug (SRE)	ASTRAKHAN Tower (TWR/GND)
125.62 (Russian 131.5)	126.0	120.6	118.6

NDB	Final Apch Crs	Minimum Alt	MDA(H)	Apt Elev -65′
G		D3.9 IBJ	(CONDITIONAL)	(BELOW SEA LEVEL)
*315	269°	1250′ (1320′)	410′ (480′)	RWY -70′

1800′
MSA G NDB

MISSED APCH: Climb on 269° to 920′ (990′), then turn LEFT to ZG NDB climbing to FL 40, or as directed.

Alt Set: MM (hPa on req) QNH on req **(QFE)** Trans level: FL 40 Trans alt: 1910′ (1980′)
Heavy turbulence with downdrafts and wind shear may be expected on final.

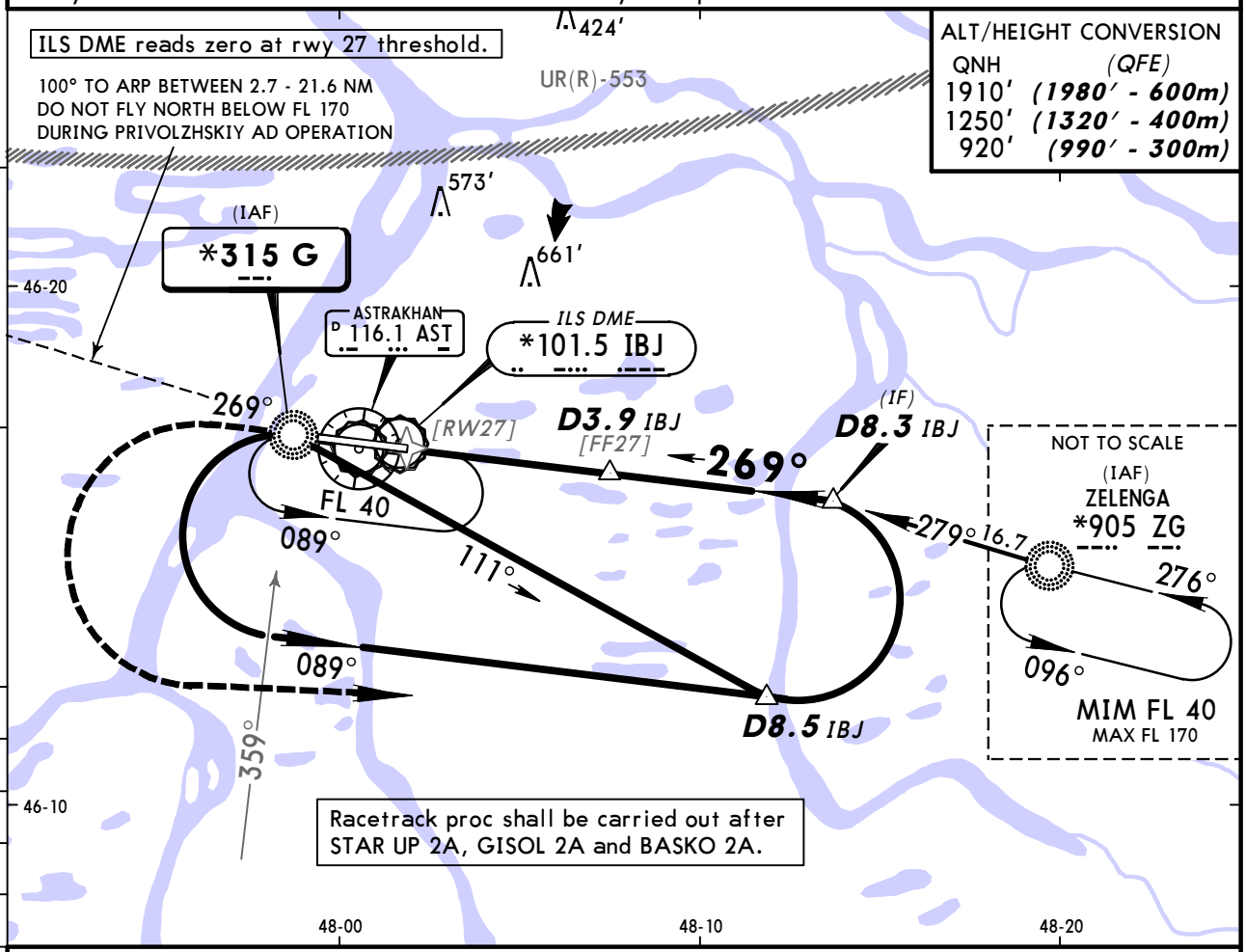

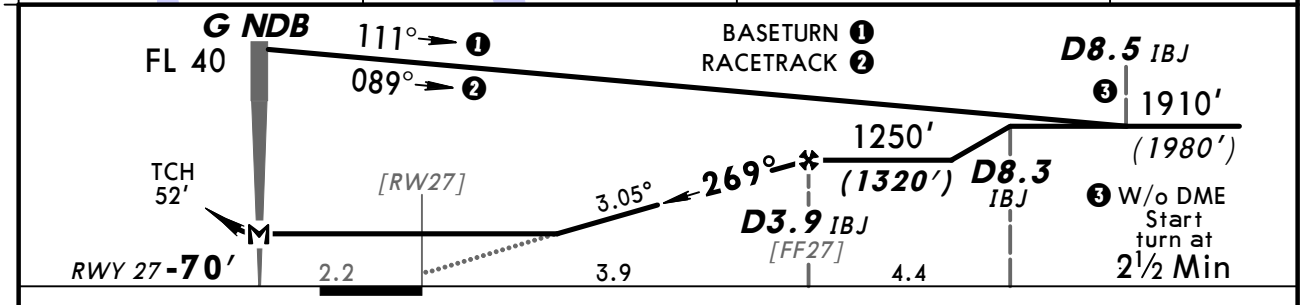

Gnd speed-Kts	70	90	100	120	140	160
Descent angle 3.05°	378	486	540	648	755	863
MAP at G NDB						

HIALS
PAPI

920′ (990′) on 269°

FL 40
LT

ZG
905

STRAIGHT-IN LANDING RWY 27

	With FAF		W/o FAF	
	MDA(H) 410′ (480′)		MDA(H) 650′ (720′)	
		ALS out		ALS out
A	see 16-6		see 16-6	
B				
C	1200m	RVR 1800m VIS 2000m	2400m	3200m
D	RVR 1800m VIS 2000m	2400m	3200m	3600m

PANS OPS

CHANGES: None.

© JEPPESEN, 2011, 2012. ALL RIGHTS RESERVED.

BRIEFING STRIP

ATIS	ASTRAKHAN Approach (APP/SRE)	ASTRAKHAN Krug (SRE)	ASTRAKHAN Tower (TWR/GND)
125.62 (Russian 131.5)	126.0	120.6	118.6

NDB G	Final Apch Crs	Minimum Alt	MDA(H) (CONDITIONAL)	Apt Elev -65′ (BELOW SEA LEVEL)
*315	269°	D3.9 IBJ 1250′ (1320′)	410′ (480′)	RWY -70′

1800′
MSA G NDB

MISSED APCH: Climb on 269° to 660′ (730′), then turn LEFT to ZG NDB climbing to FL 40, or as directed.

Alt Set: MM (hPa on req) QNH on req **(QFE)** Trans level: FL 40 Trans alt: 1910′ **(1980′)**
Heavy turbulence with downdrafts and wind shear may be expected on final.

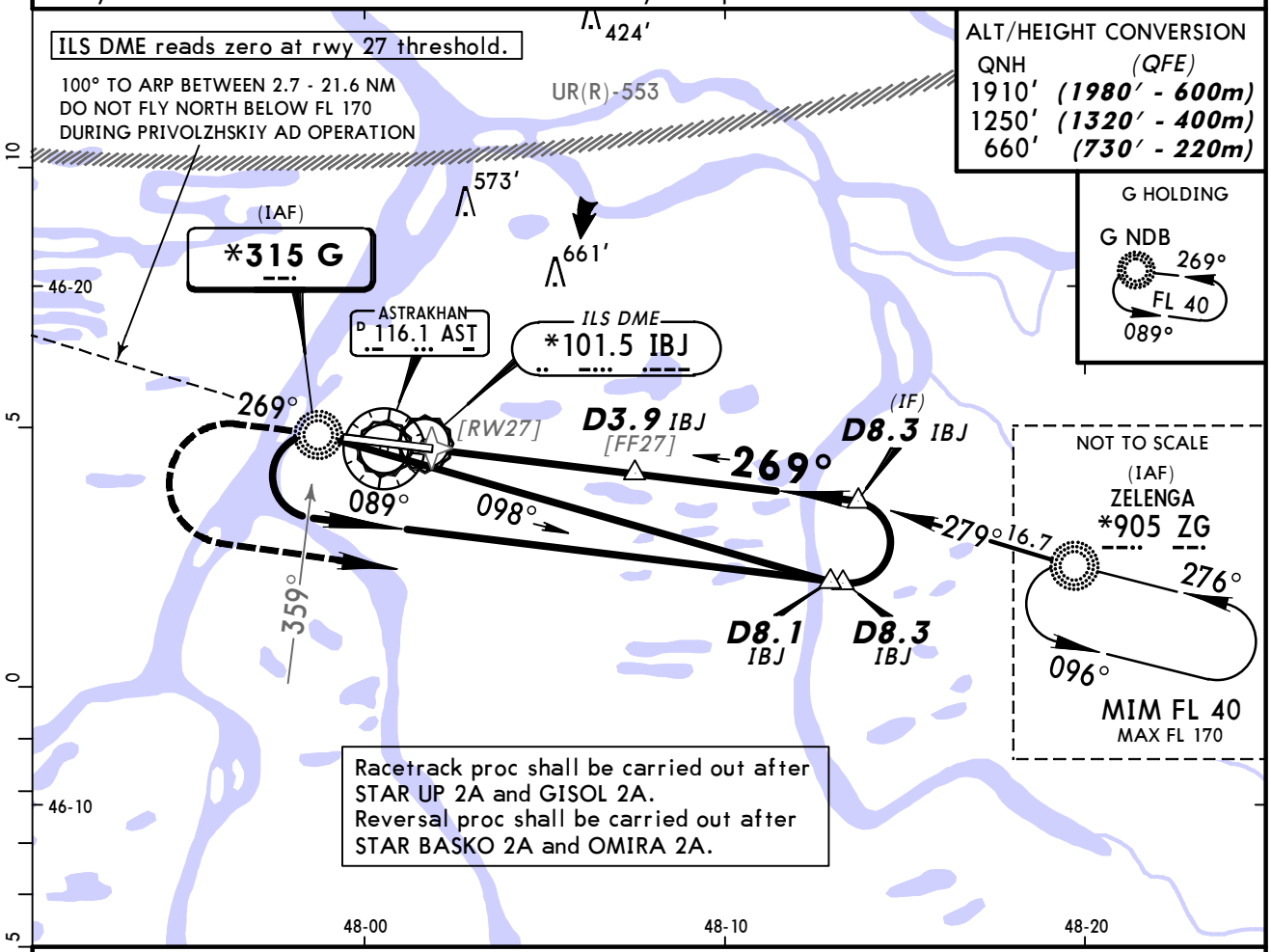

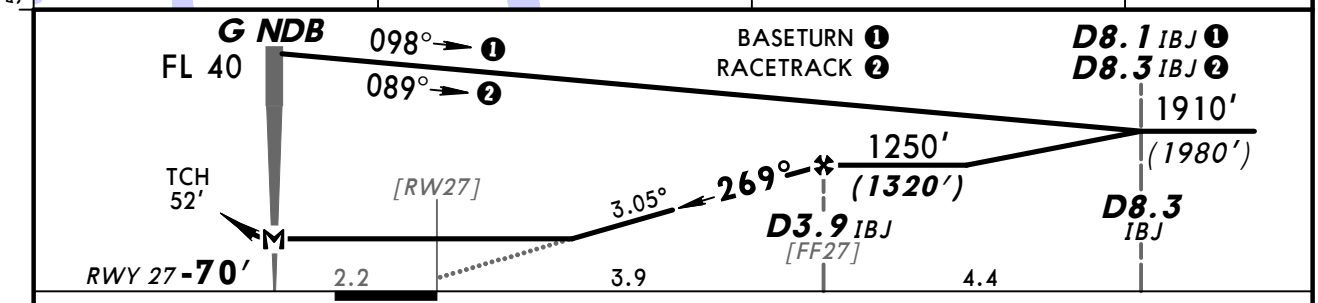

Gnd speed-Kts	70	90	100	120	140	160
Descent angle 3.05°	378	486	540	648	755	863
MAP at G NDB						

HIALS
PAPI

660′ (730′) on 269°

FL 40
LT

ZG
905

PANS OPS

STRAIGHT-IN LANDING RWY 27

	With FAF		W/o FAF	
	MDA(H) 410′ (480′)		MDA(H) 650′ (720′)	
		ALS out		ALS out
A	1200m	RVR 1500m VIS 1600m	1200m	RVR 1500m VIS 1600m
B				
C	see 16-5		see 16-5	
D				

CHANGES: Note.

© JEPPESEN, 2011, 2012. ALL RIGHTS RESERVED.

(c) JEPPESEN SANDERSON, INC., 2012, ALL RIGHTS RESERVED

JEPPESEN
JeppView for Windows

Chart changes since cycle 24-2012

ADD = added chart, REV = revised chart, DEL = deleted chart.

ACT	PROCEDURE IDENT	INDEX	REV DATE	EFF DATE

ASTRAKHAN, (ASTRAKHAN - URWA)

(c) JEPPESEN SANDERSON, INC., 2012, ALL RIGHTS RESERVED

TERMINAL CHART CHANGE NOTICES

No Chart Change Notices for Airport URWA