(c) JEPPESEN SANDERSON, INC., 2012, ALL RIGHTS RESERVED

List of pages in this Trip Kit

Trip Kit Index
Airport Information For UKHP
Terminal Charts For UKHP
Revision Letter For Cycle 25-2012
Change Notices
Notebook

(c) JEPPESEN SANDERSON, INC., 2012, ALL RIGHTS RESERVED

General Information

Location: Poltava Ukr
IATA Code:
Lat/Long: N49° 34.2' E034° 23.6'
Elevation: 505 ft

Airport Use: Public
Magnetic Variation: 7.5°E

Customs: No
Airport Type: IFR
Landing Fee: No
Control Tower: No
Jet Start Unit: No
LLWS Alert: No
Beacon: No

Sunrise: 0539 Z
Sunset: 1351 Z,

Runway Information

Communication Information

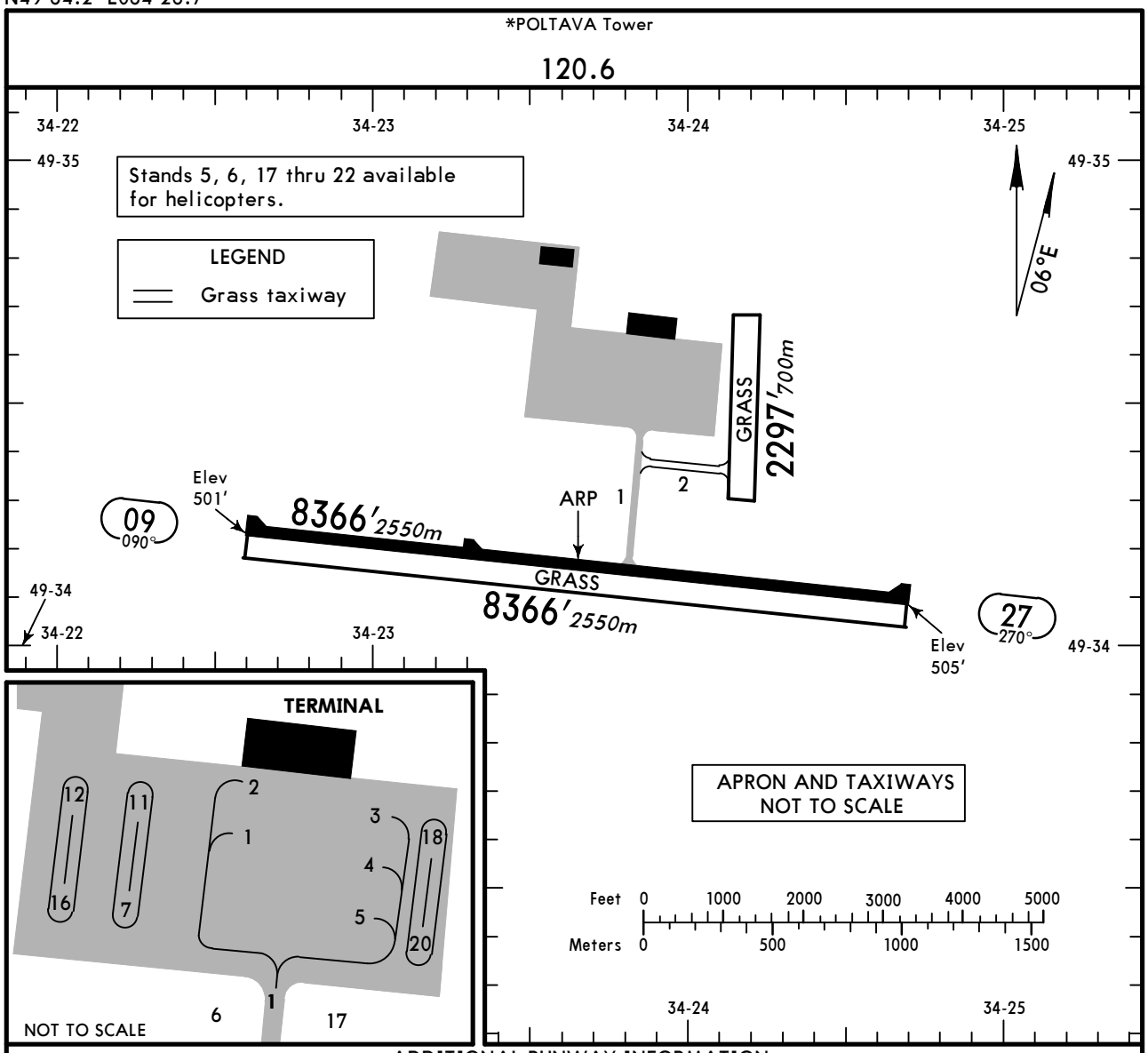

ADDITIONAL RUNWAY INFORMATION

RWY		USABLE LENGTHS — LANDING BEYOND — Threshold	Glide Slope	TAKE-OFF	WIDTH
09 27	RL *(60m)*				138′ *42m*
09 27	Grass runway				279′ *85m*
	Grass runway				328′ *100m*

JAR-OPS

TAKE-OFF **1**

	LVP must be in force	Main Rwy	
	RCLM (DAY only) or RL	RCLM (DAY only) or RL	NIL (DAY only)
A	*250m*	*400m*	*500m*
B			
C			
D	*300m*		

1 Operators applying U.S. Ops Specs: CL required below 300m.

CHANGES: New airport.

© JEPPESEN, 2012. ALL RIGHTS RESERVED.

BRIEFING STRIP ™

*POLTAVA Tower
120.6

NDB	Final	Minimum Alt	MDA(H)	Apt Elev 505′
PO	Apch Crs	LOM		RWY 501′
*1180	090°	1190′ (689′)	870′ (369′)	

MISSED APCH: Climb on 090° to 1650′, then turn RIGHT onto 317° to PO NDB climbing to 3120′, then according to chart.

2300′
MSA
PO NDB

Alt Set: hPa (MM on req) | Rwy Elev: 18 hPa | Trans level: By ATC | Trans alt: 10010′

FT/METER CONVERSION
QNH

10010′ -	3050m
3120′ -	950m
2300′ -	700m
2140′ -	650m
1650′ -	500m
1190′ -	360m

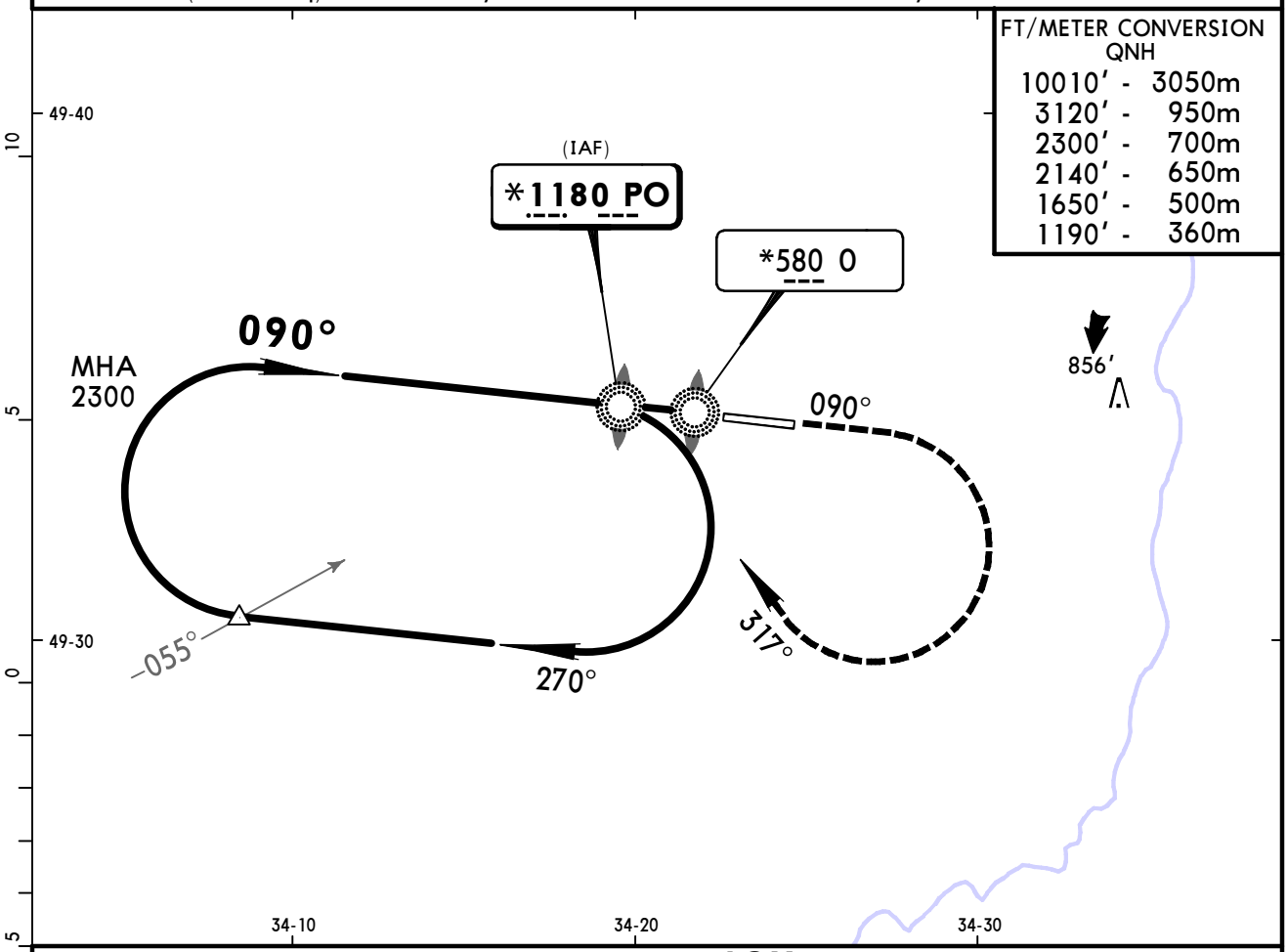

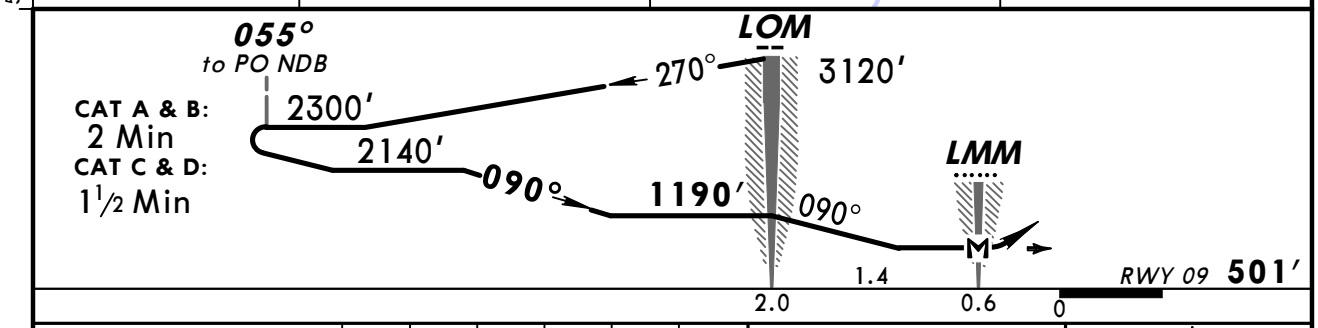

Gnd speed-Kts		70	90	100	120	140	160
Descent angle	3.00°	372	478	531	637	743	849
MAP at LMM							

1650′ on 090°

PANS OPS

JAR-OPS STRAIGHT-IN LANDING RWY **09**

MDA(H) **870′** (369′)

			Max Kts	MDA(H)	VIS
A	RVR 1500m		100	970′ (465′)	1500m
B			135	1010′ (505′)	1600m
C	RVR 1800m		180	1170′ (665′)	2400m
D	RVR 2000m		205	1210′ (705′)	3600m

CIRCLE-TO-LAND

CHANGES: New procedure.

© JEPPESEN, 2012. ALL RIGHTS RESERVED.

BRIEFING STRIP™

*POLTAVA Tower
120.6

NDB	Final Apch Crs	Minimum Alt LOM	MDA(H)	Apt Elev 505′
PL *1180	270°	1250′ (745′)	1070′ (565′)	RWY 505′

MISSED APCH: Climb on 270° to 1650′, then turn LEFT onto 045° to PL NDB climbing to 3120′, then according to chart.

2300′
MSA PL NDB

Alt Set: hPa (MM on req) | Rwy Elev: 18 hPa | Trans level: By ATC | Trans alt: 10010′

FT/METER CONVERSION
QNH

10010′ -	3050m
3120′ -	950m
2300′ -	700m
2140′ -	650m
1650′ -	500m
1250′ -	380m

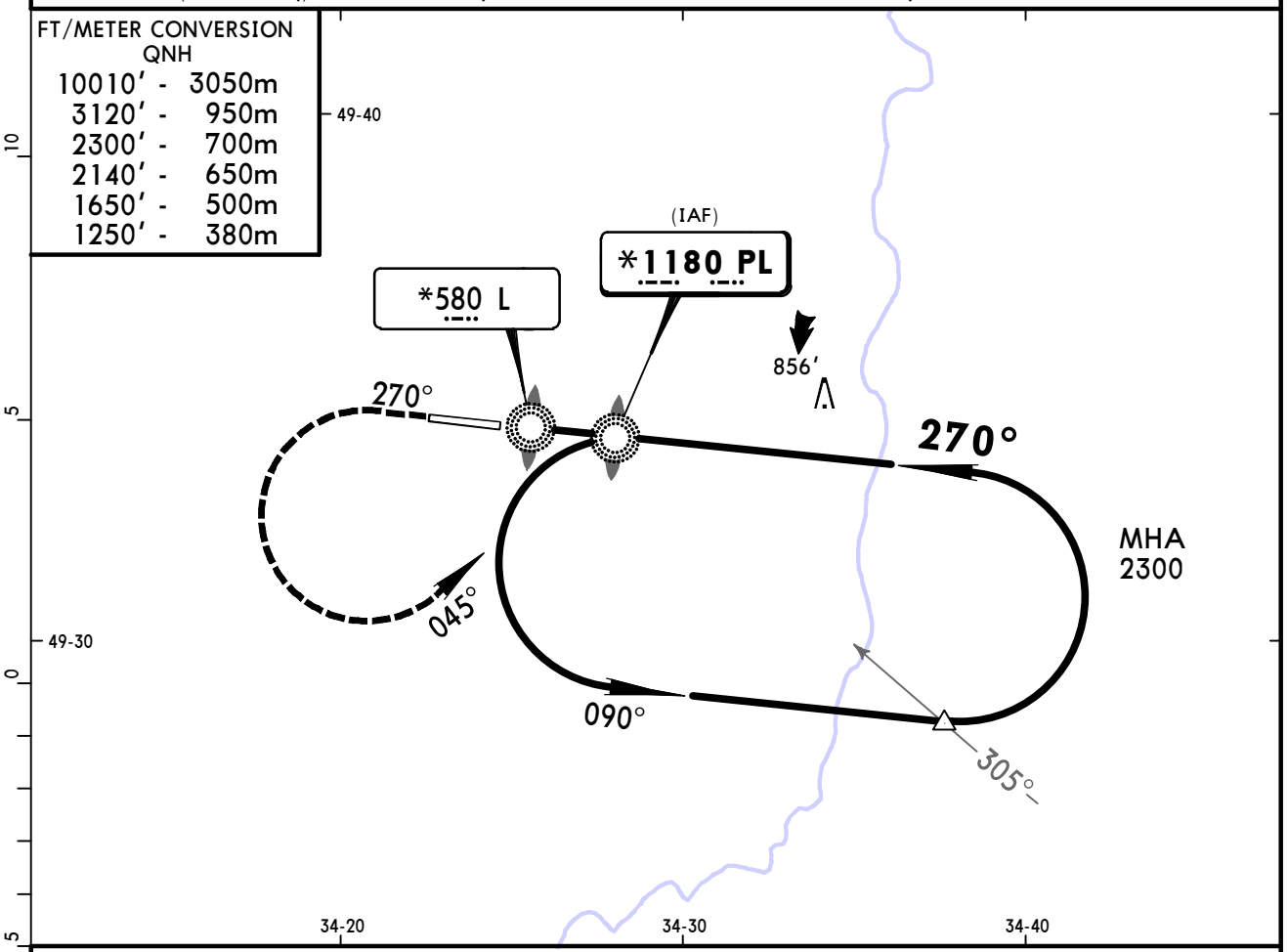

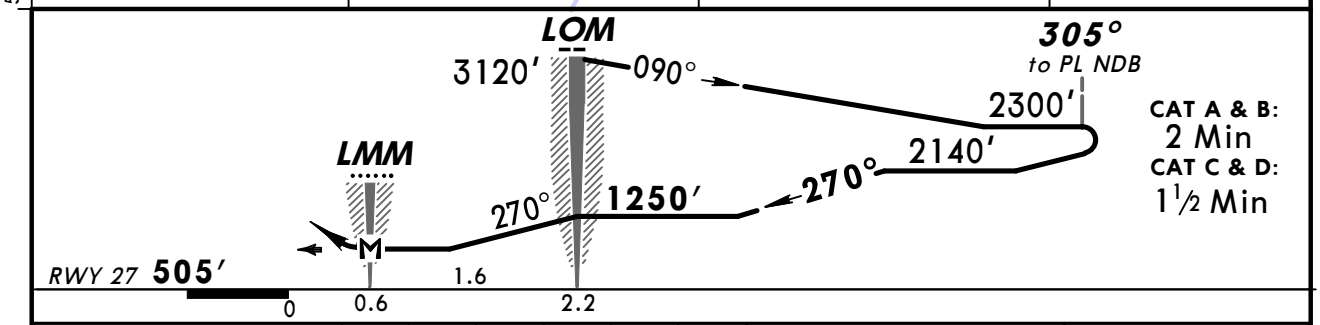

Gnd speed-Kts		70	90	100	120	140	160
Descent angle	3.00°	372	478	531	637	743	849
MAP at LMM							

1650′ on 270°

JAR-OPS

	STRAIGHT-IN LANDING RWY 27	CIRCLE-TO-LAND		
	MDA(H) 1070′ (565′)	Max Kts	MDA(H)	VIS
A	RVR 1500m	100	1070′ (565′)	1500m
B		135	1070′ (565′)	1600m
C	RVR 2000m	180	1170′ (665′)	2400m
D		205	1210′ (705′)	3600m

PANS OPS

CHANGES: New procedure.

© JEPPESEN, 2012. ALL RIGHTS RESERVED.

(c) JEPPESEN SANDERSON, INC., 2012, ALL RIGHTS RESERVED

JEPPESEN
JeppView for Windows

Chart changes since cycle 24-2012

ADD = added chart, REV = revised chart, DEL = deleted chart.

ACT	PROCEDURE IDENT	INDEX	REV DATE	EFF DATE

POLTAVA, (POLTAVA - UKHP)

(c) JEPPESEN SANDERSON, INC., 2012, ALL RIGHTS RESERVED

TERMINAL CHART CHANGE NOTICES

No Chart Change Notices for Airport UKHP