(c) JEPPESEN SANDERSON, INC., 2012, ALL RIGHTS RESERVED

List of pages in this Trip Kit

Trip Kit Index
Airport Information For UAFM
Terminal Charts For UAFM
Revision Letter For Cycle 08-2012
Change Notices
Notebook

(c) JEPPESEN SANDERSON, INC., 2012, ALL RIGHTS RESERVED

General Information

Location: Bishkek Kgz
IATA Code: FRU
Lat/Long: N43° 03.7' E074° 28.7'
Elevation: 2090 ft

Airport Use: Public
Magnetic Variation: 5.2°E

Fuel Types: Jet A-1
Repair Types: Minor Airframe, Minor Engine
Customs: Yes
Airport Type: IFR
Landing Fee: Yes
Control Tower: Yes
Jet Start Unit: No
LLWS Alert: No
Beacon: No

Sunrise: 0013 Z
Sunset: 1349 Z,

Runway Information

Runway: 08
Length x Width: 13793 ft x 180 ft
Surface Type: concrete
TDZ-Elev: 2090 ft
Lighting: Edge, ALS, Centerline, TDZ

Runway: 26
Length x Width: 13793 ft x 180 ft
Surface Type: concrete
TDZ-Elev: 2055 ft
Lighting: Edge, ALS, Centerline, TDZ

Communication Information

Bishkek Tower 124.0 Secondary
Bishkek Tower 118.1
Bishkek Taxiing Ground Control 124.0 Secondary
Bishkek Taxiing Ground Control 121.7
Bishkek Approach Control 124.6
Bishkek Approach Control 124.0 Secondary
Bishkek Krug Radar 124.0 Secondary
Bishkek Krug Radar 120.3

Apt Elev 2090′

Alt Set: MM (hPa on request) QNH on request (QFE)
Trans level: FL60 Trans alt: 4390′ *(2300′)*

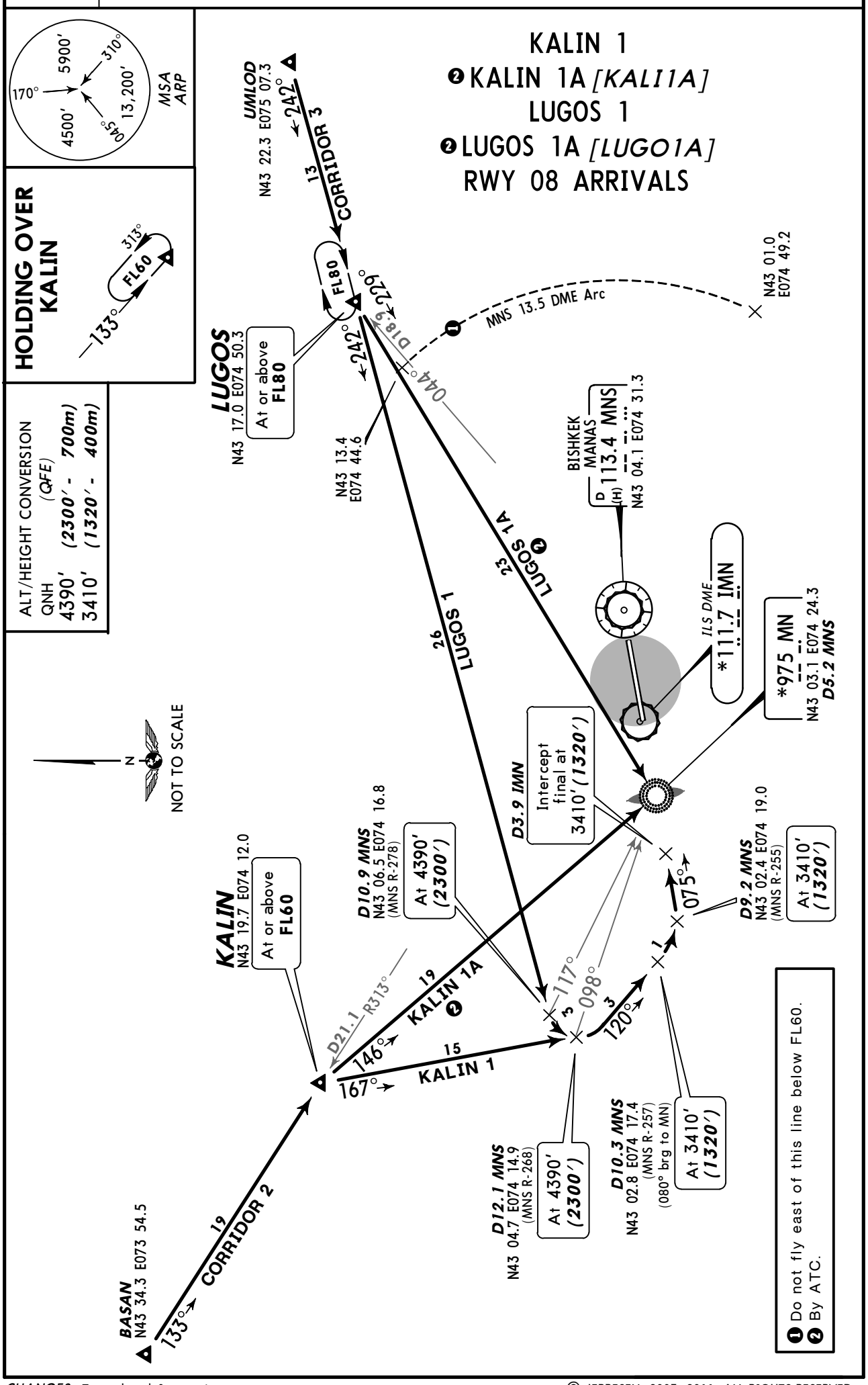

CHANGES: Trans level & crossings.

© JEPPESEN, 2003, 2011. ALL RIGHTS RESERVED.

Apt Elev 2090′

Alt Set: MM (hPa on request) QNH on request (QFE)
Trans level: FL60 Trans alt: 4390′ (2300′)

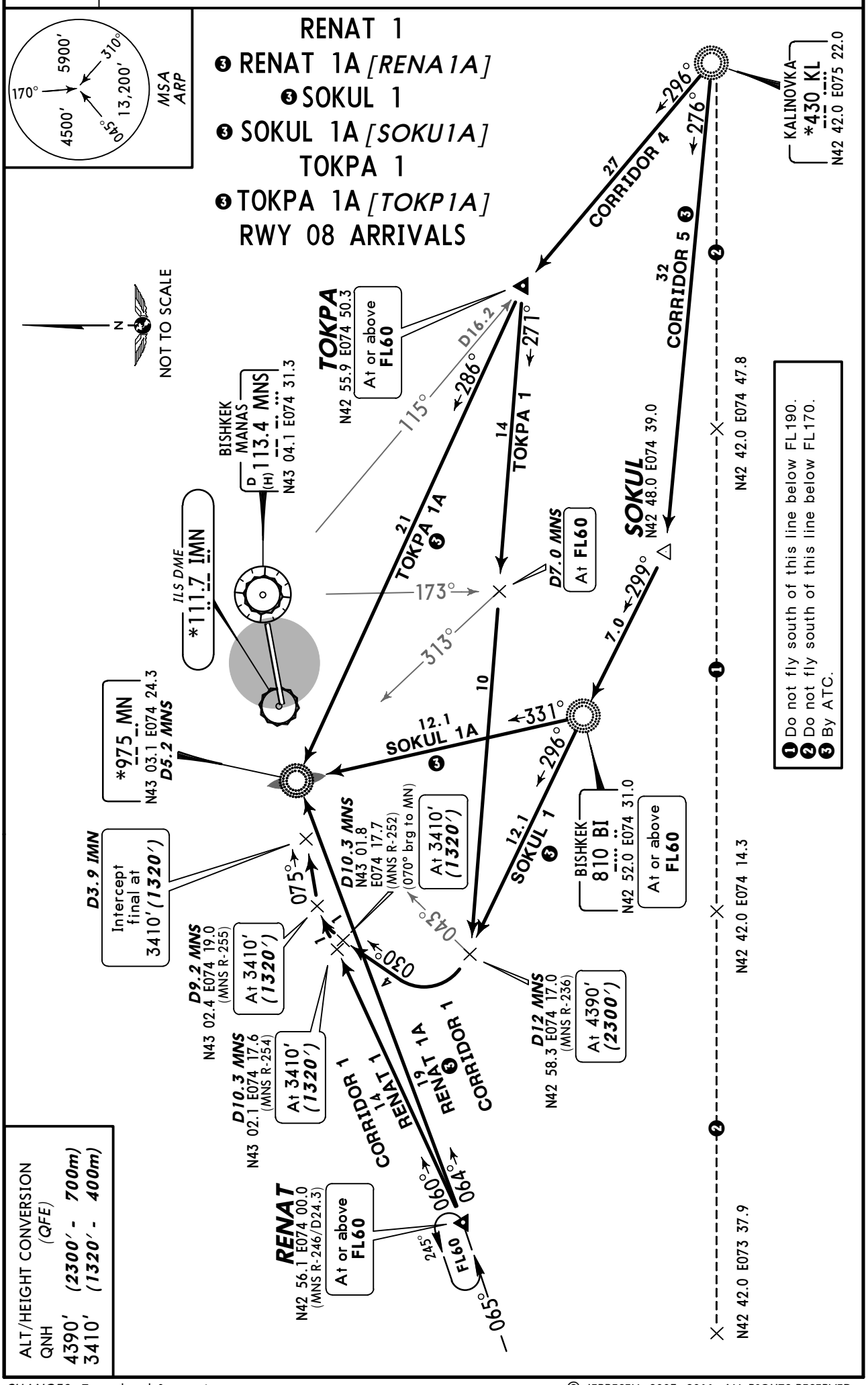

ALT/HEIGHT CONVERSION (QFE)

QNH	
4390′	(2300′ - 700m)
3410′	(1320′ - 400m)

CHANGES: Trans level & crossings.

© JEPPESEN, 2003, 2011. ALL RIGHTS RESERVED.

Apt Elev	
2090′	Alt Set: MM (hPa on request) QNH on request (QFE) Trans level: FL60 Trans alt: 4390′ *(2335′)*

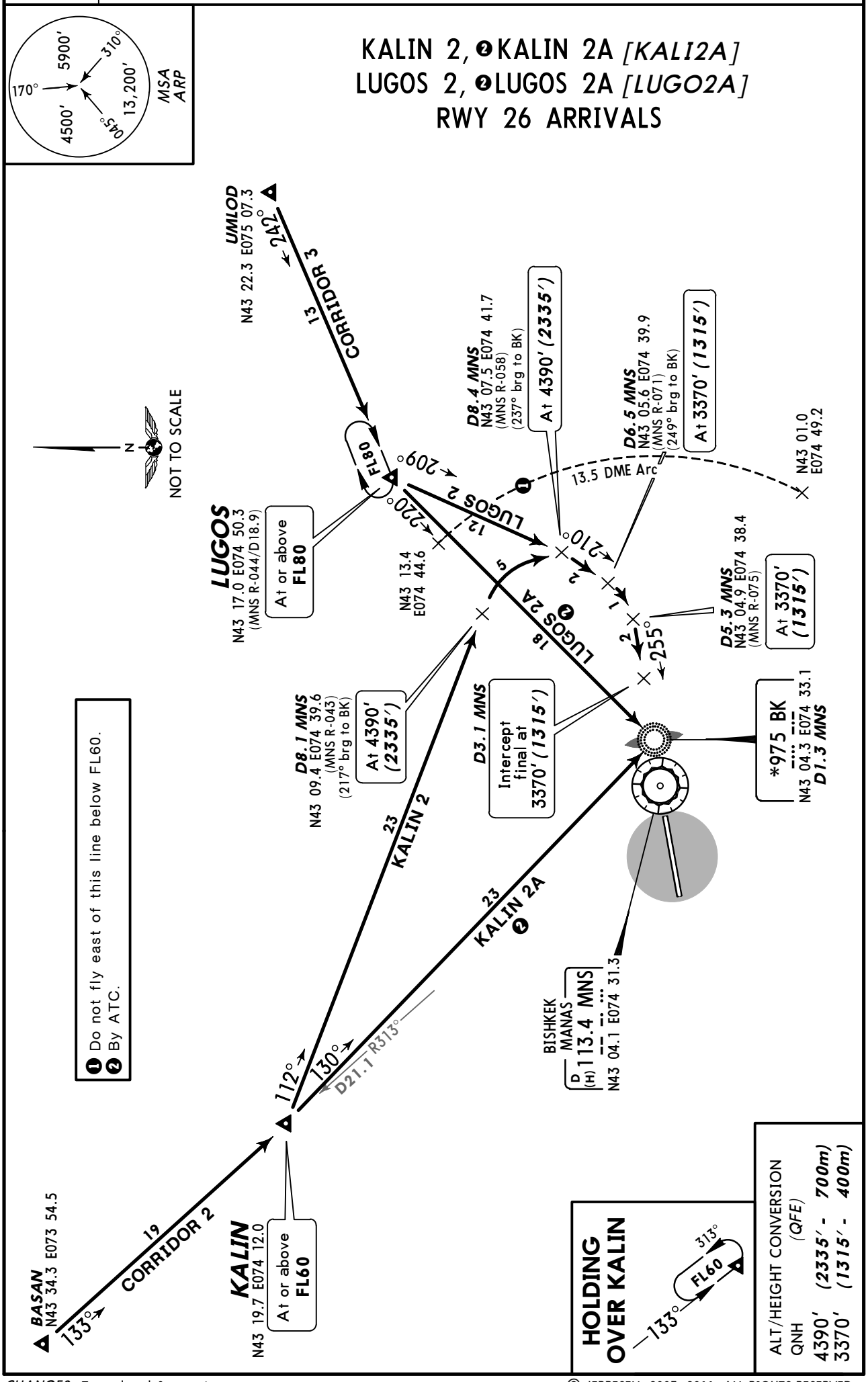

CHANGES: Trans level & crossings.

© JEPPESEN, 2003, 2011. ALL RIGHTS RESERVED.

Apt Elev
2090′

Alt Set: MM (hPa on request) QNH on request (QFE)
Trans level: FL60 Trans alt: 4390′ (2335′)

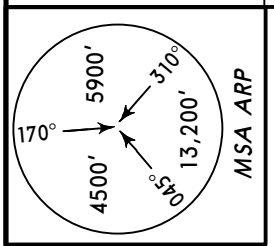

RENAT 2, ❹ RENAT 2A [RENA2A] ❹ RENAT 2B [RENA2B], ❹ SOKUL 2 TOKPA 2, ❹ TOKPA 2A [TOKP2A] RWY 26 ARRIVALS

KALINOVKA
*430 KL
N42 42.0 E075 22.0

TOKPA
N42 55.9 E074 50.3
(MNS R-115/D16.2)
At or above FL60

SOKUL
N42 48.0 E074 39.0

BISHKEK
810 BI
N42 52.0 E074 31.0
At or above FL60

*975 BK
N43 04.3 E074 33.1
D1.3 MNS

RENAT
N42 56.1 E074 00.0
(MNS R-246/D24.3)
At or above FL60

BISHKEK MANAS
D (H) 113.4 MNS
N43 04.1 E074 31.3

D8.4 MNS
N43 07.5 E074 41.7
(MNS R-058)
(237° brg to BK)
At 4390′ (2335′)

D6.5 MNS
N43 04.6 E074 39.9
(MNS R-079)
(260° brg to BK)
At 3370′ (1315′)

D7.9 MNS
N43 03.3 E074 42.1
(MNS R-089)
(273° brg to BK)
At 4390′ (2335′)

D8.1 MNS
N43 09.4 E074 39.6
(MNS R-043)
(217° brg to BK)
At 4390′ (2335′)

D6.5 MNS
N43 05.6 E074 39.9
(MNS R-071)
(249° brg to BK)
At 3370′ (1315′)

D5.3 MNS
N43 04.9 E074 38.4
(MNS R-075)
At 3370′ (1315′)

D3.1 MNS
Intercept final at 3370′ (1315′)

D7.6 MNS
N43 00.7 E074 40.5
(MNS R-110)
(298° brg to BK)
At 4390′ (2335′)

N43 13.4
E074 44.6

N43 01.0
E074 49.2

13.5 DME Arc

CORRIDOR 4
CORRIDOR 5
TOKPA 2
TOKPA 2A
SOKUL 2
RENAT 2B CORRIDOR 1
RENAT 2A CORRIDOR 1
RENAT 2 CORRIDOR 1

296° 276° 315° 299° 210° 300° 255° 002° 299° 090° 060° 076° 245° 065°

N42 42.0 E074 47.8
N42 42.0 E074 14.3
N42 42.0 E073 37.9

NOT TO SCALE

❶ Do not fly south of this line below FL190.
❷ Do not fly south of this line below FL170.
❸ Do not fly east of this line below FL60.
❹ By ATC.

ALT/HEIGHT CONVERSION
QNH (QFE)
4390′ (2335′ - 700m)
3370′ (1315′ - 400m)

© JEPPESEN, 2003, 2011. ALL RIGHTS RESERVED.

Apt Elev 2090′	QNH on request **(QFE)** Trans level: FL60 Trans alt: 4390′ ***(2300′)*** Flights within holding areas shall be carried out in the opposite direction of SID routes for the purpose of identification of aircraft, which are in the holding area and on the airways, by ATC.

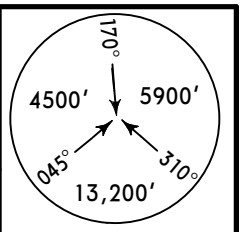

MSA ARP

BASAN 1, DW 1, DW 1A
RWY 08 DEPARTURES

ALT/HEIGHT CONVERSION	
QNH	*(QFE)*
2420′	***(330′ - 100m)***
2750′	***(660′ - 200m)***
4390′	***(2300′ - 700m)***

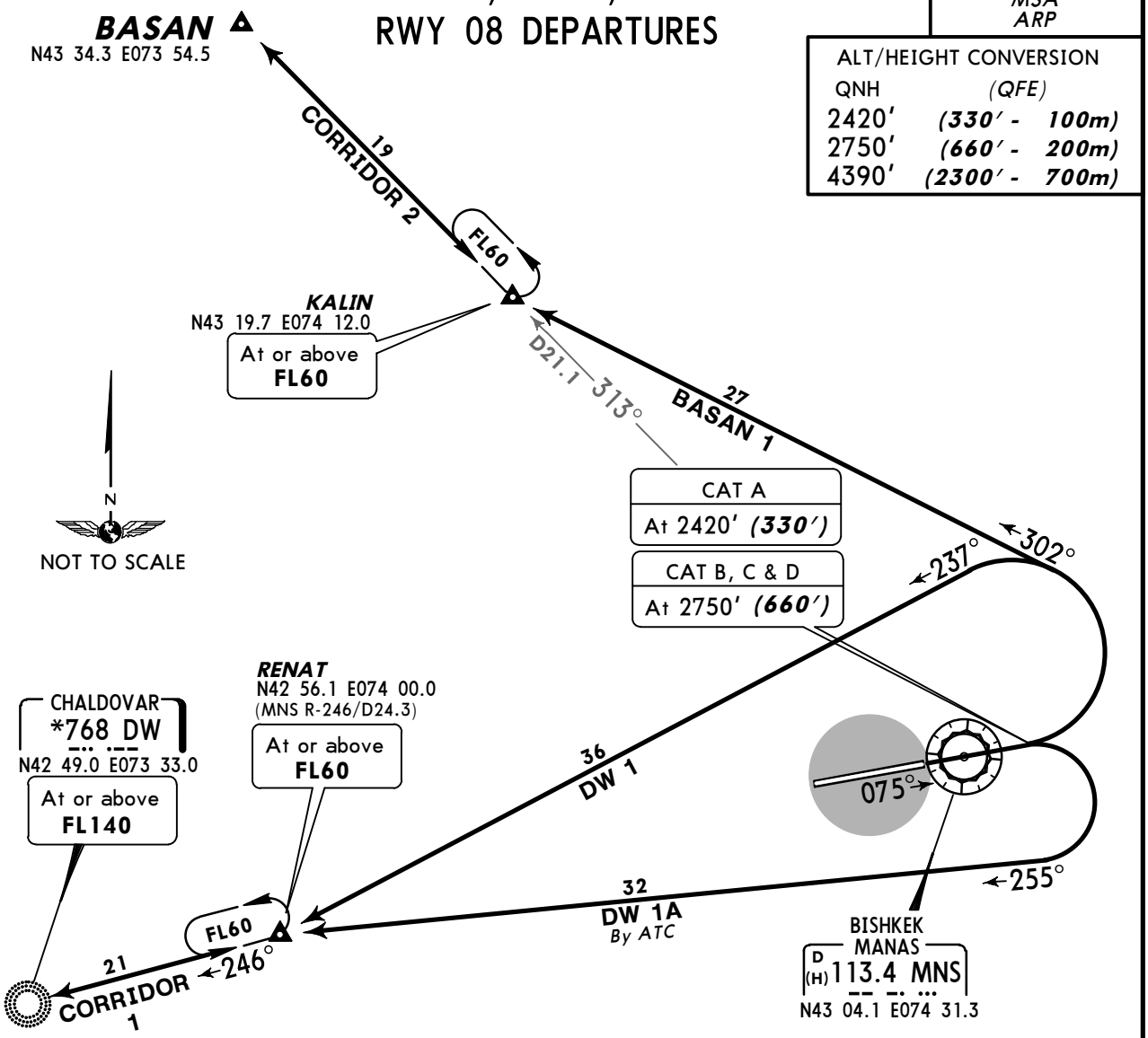

❶ Do not fly south of this line below FL190.
❷ Do not fly south of this line below FL170.

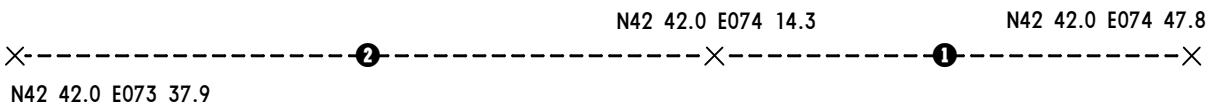

DW 1, 1A

These SIDs require a minimum climb gradient of 6.2%.

Gnd speed-KT	75	100	150	200	250	300
6.2% V/V (fpm)	471	628	942	1256	1570	1884

If unable to comply, turn RIGHT to join the assigned coridor.

SID	ROUTING
BASAN 1	Climb to 2420′ (330′) (CAT A) or 2750′ (660′) (CAT B, C & D), turn LEFT, 302° track to KALIN, further climb as directed by ATC.
DW 1	Climb to 2420′ (330′) (CAT A) or 2750′ (660′) (CAT B, C & D), turn LEFT, 237° track to RENAT, further climb as directed by ATC.
DW 1A By ATC	Climb to 2420′ (330′) (CAT A) or 2750′ (660′) (CAT B, C & D), turn RIGHT, 255° track to RENAT, further climb as directed by ATC.

CHANGES: None.

© JEPPESEN, 2003, 2011. ALL RIGHTS RESERVED.

Apt Elev
2090′

QNH on request **(QFE)**
Trans level: FL60 Trans alt: 4390′ ***(2300′)***
Flights within holding areas shall be carried out in the opposite direction of SID routes for the purpose of identification of aircraft, which are in the holding area and on the airways, by ATC.

KL 1, KL 1A, UMLOD 1
RWY 08 DEPARTURES

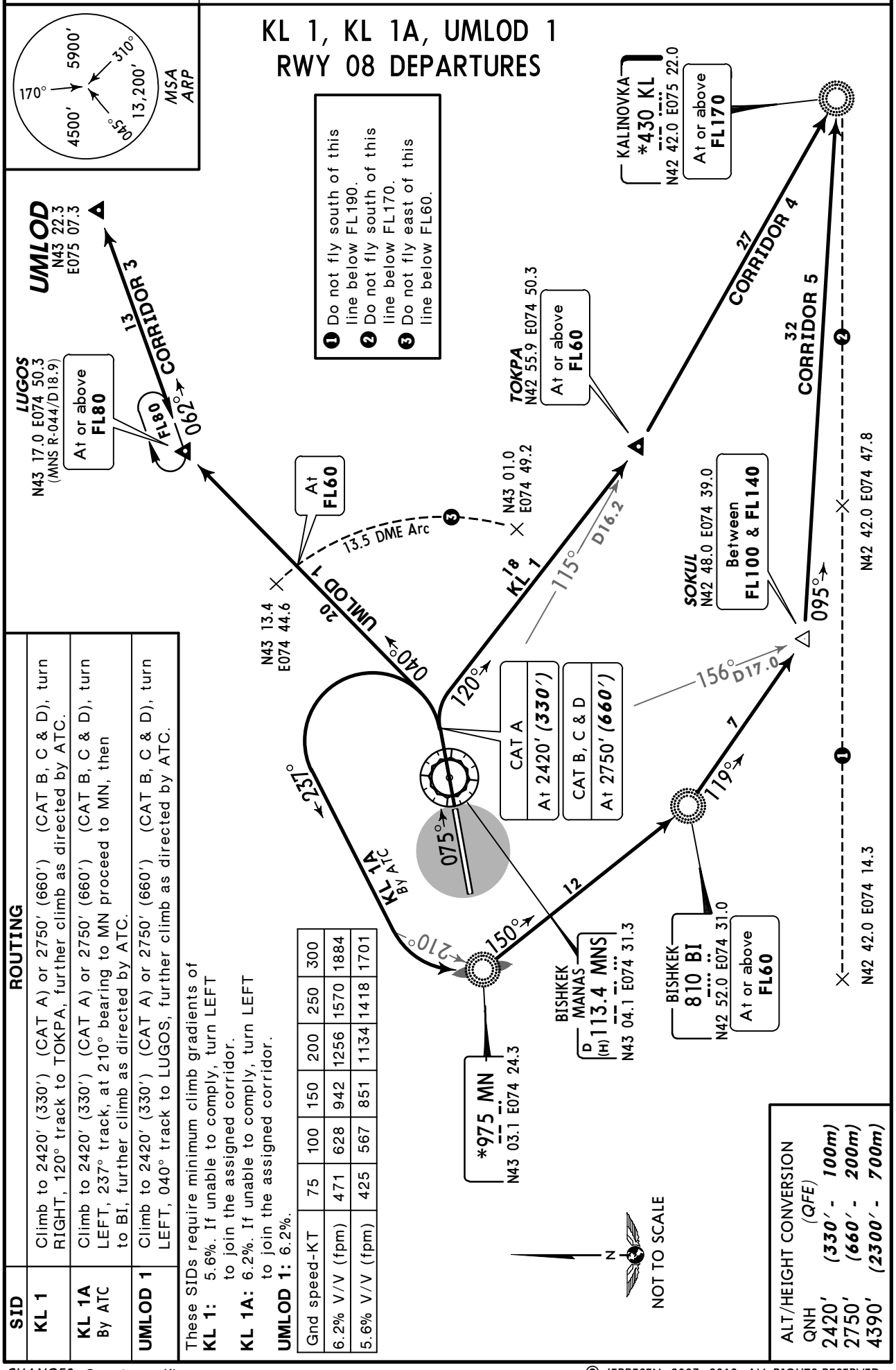

1 Do not fly south of this line below FL190.
2 Do not fly south of this line below FL170.
3 Do not fly east of this line below FL60.

SID	ROUTING
KL 1	Climb to 2420′ (330′) (CAT A) or 2750′ (660′) (CAT B, C & D), turn RIGHT, 120° track to TOKPA, further climb as directed by ATC.
KL 1A By ATC	Climb to 2420′ (330′) (CAT A) or 2750′ (660′) (CAT B, C & D), turn LEFT, 237° track, at 210° bearing to MN proceed to MN, then to BI, further climb as directed by ATC.
UMLOD 1	Climb to 2420′ (330′) (CAT A) or 2750′ (660′) (CAT B, C & D), turn LEFT, 040° track to LUGOS, further climb as directed by ATC.

These SIDs require minimum climb gradients of
KL 1: 5.6%. If unable to comply, turn LEFT to join the assigned corridor.
KL 1A: 6.2%. If unable to comply, turn LEFT to join the assigned corridor.
UMLOD 1: 6.2%.

Gnd speed-KT	75	100	150	200	250	300
6.2% V/V (fpm)	471	628	942	1256	1570	1884
5.6% V/V (fpm)	425	567	851	1134	1418	1701

© JEPPESEN, 2003, 2012. ALL RIGHTS RESERVED.

Apt Elev
2090′

QNH on request **(QFE)**
Trans level: FL60 Trans alt: 4390′ ***(2335′)***
Flights within holding areas shall be carried out in the opposite direction of SID routes for the purpose of identification of aircraft, which are in the holding area and on the airways, by ATC.

SID	ROUTING
BASAN 2	Climb to 2390′ (335′) (CAT A) or to 2720′ (655′) (CAT B, C & D), turn RIGHT, 332° track to KALIN, further climb as directed by ATC.
DW 2	Climb to 2390′ (335′) (CAT A) or to 2720′ (655′) (CAT B, C & D), turn LEFT, 243° track to RENAT, further climb as directed by ATC.

BASAN 2, DW 2
RWY 26 DEPARTURES

DW 2

This SID requires a minimum climb gradient of 6.2%.

Gnd speed-KT	75	100	150	200	250	300
6.2% V/V (fpm)	471	628	942	1256	1570	1884

If unable to comply, turn RIGHT to join the assigned corridor.

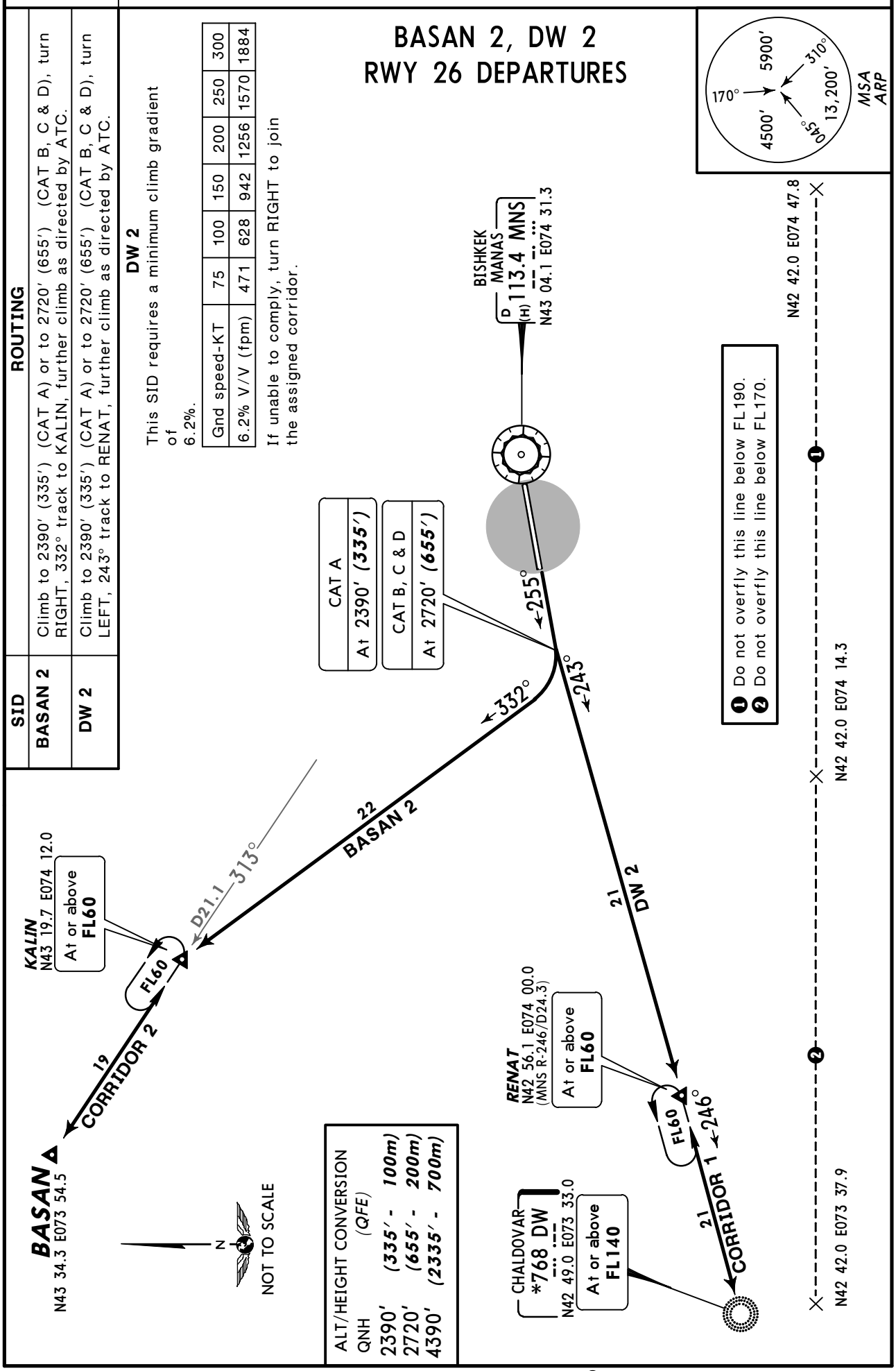

CHANGES: None.

© JEPPESEN, 2003, 2011. ALL RIGHTS RESERVED.

Apt Elev
2090′

QNH on request **(QFE)**
Trans level: FL60 Trans alt: 4390′ ***(2335′)***
Flights within holding areas shall be carried out in the opposite direction of SID routes for the purpose of identification of aircraft, which are in the holding area and on the airways, by ATC.

MSA ARP
170° 5900′ 310°
4500′ 13,200′ 045°

KL 2, KL 2A, UMLOD 2
RWY 26 DEPARTURES

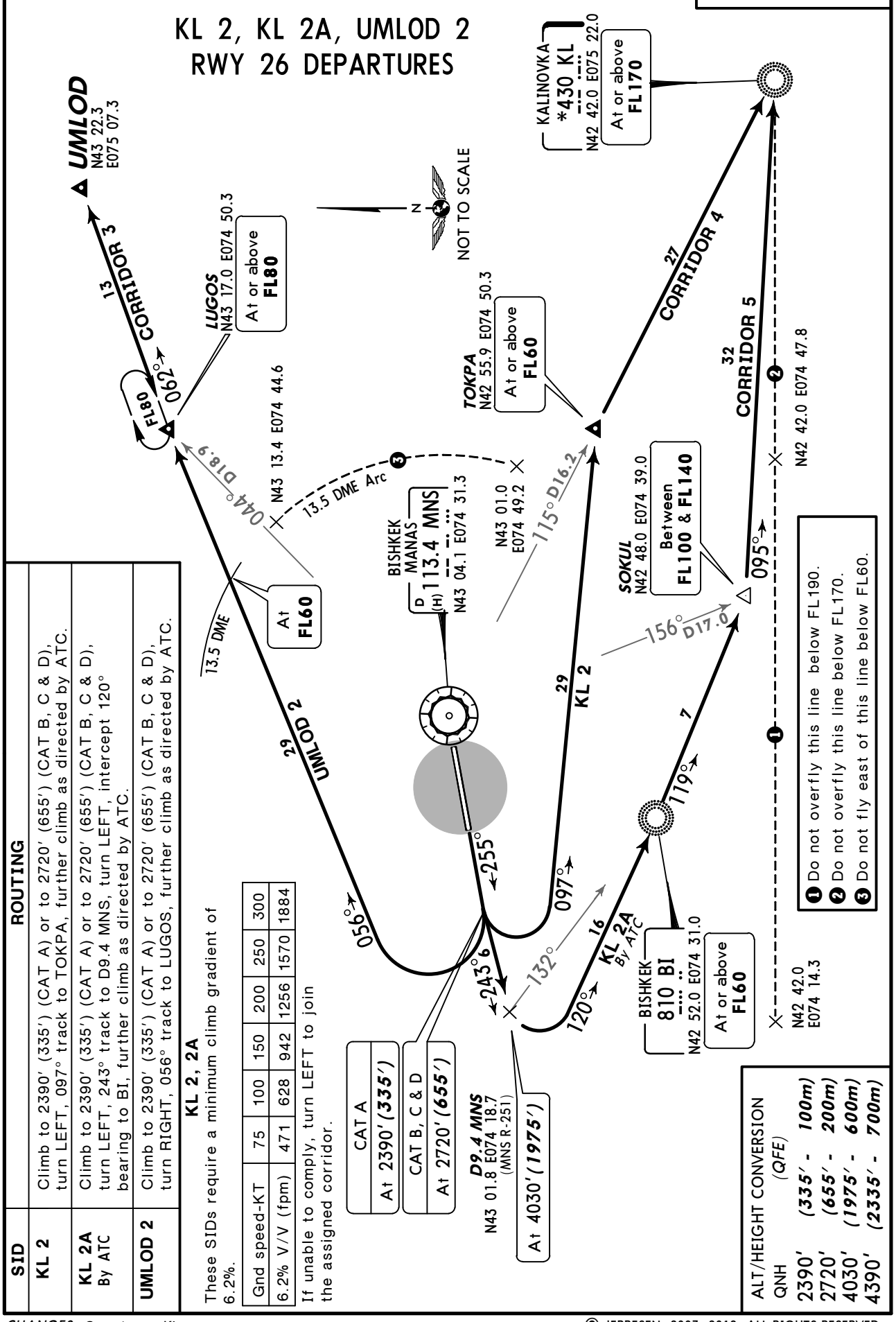

ROUTING

SID	
KL 2	Climb to 2390′ (335′) (CAT A) or to 2720′ (655′) (CAT B, C & D), turn LEFT, 097° track to TOKPA, further climb as directed by ATC.
KL 2A By ATC	Climb to 2390′ (335′) (CAT A) or to 2720′ (655′) (CAT B, C & D), turn LEFT, 243° track to D9.4 MNS, turn LEFT, intercept 120° bearing to BI, further climb as directed by ATC.
UMLOD 2	Climb to 2390′ (335′) (CAT A) or to 2720′ (655′) (CAT B, C & D), turn RIGHT, 056° track to LUGOS, further climb as directed by ATC.

KL 2, 2A

These SIDs require a minimum climb gradient of 6.2%.

Gnd speed-KT	75	100	150	200	250	300
6.2% V/V (fpm)	471	628	942	1256	1570	1884

If unable to comply, turn LEFT to join the assigned corridor.

ALT/HEIGHT CONVERSION
(QFE)

QNH		
2390′	*(335′*	*- 100m)*
2720′	*(655′*	*- 200m)*
4030′	*(1975′*	*- 600m)*
4390′	*(2335′*	*- 700m)*

CHANGES: Crossing at KL.

© JEPPESEN, 2003, 2012. ALL RIGHTS RESERVED.

US opr ATIS	BISHKEK Taxiing (GND)	Tower	TWR Liaison
128.7	121.7	118.1	132.6

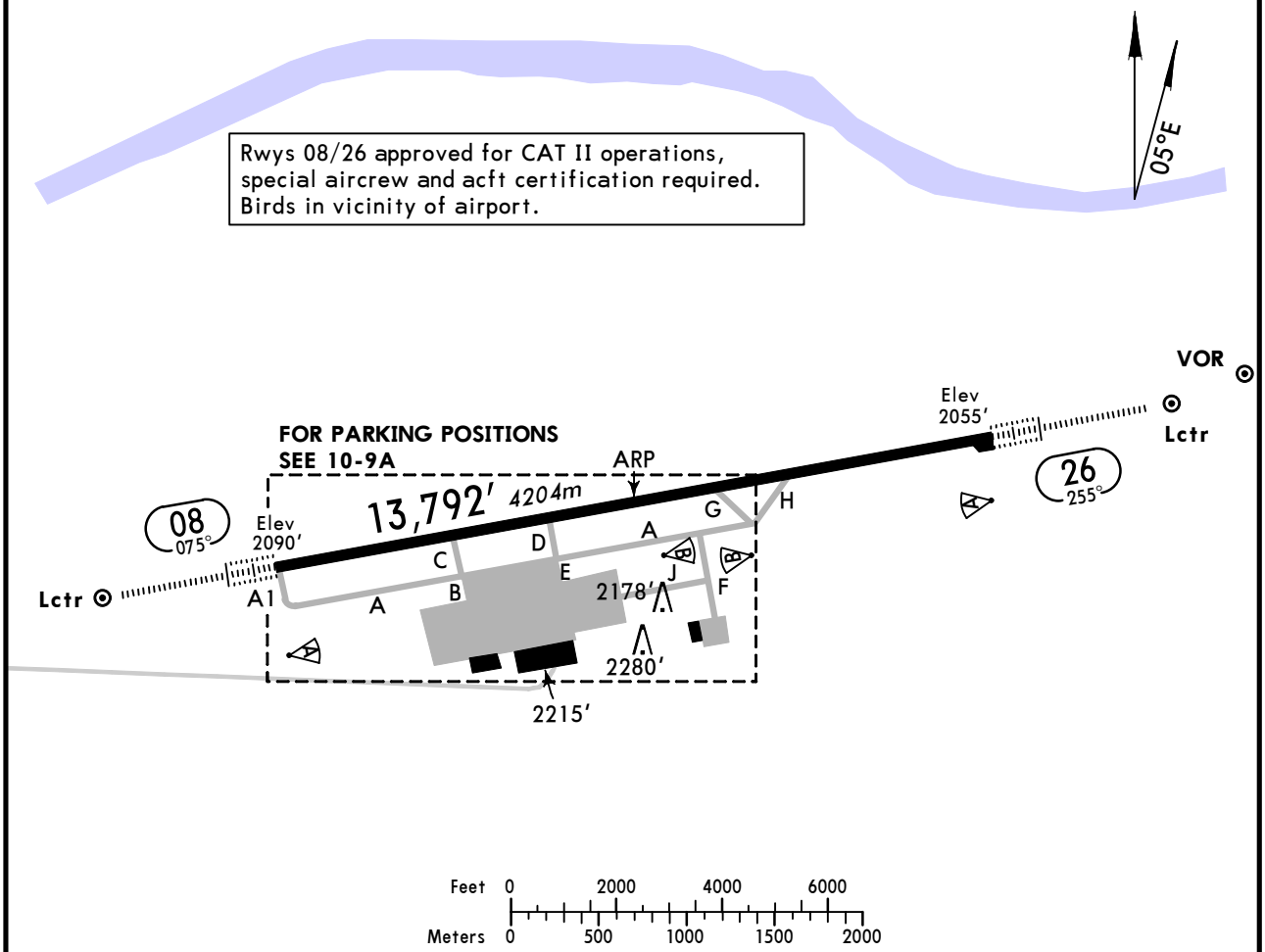

ADDITIONAL RUNWAY INFORMATION

RWY		USABLE LENGTHS — LANDING BEYOND — Threshold	Glide Slope	TAKE-OFF	WIDTH
08 26	HIRL *(60m)* CL *(15m)* HIALS-II TDZ PAPI-L(3.0°) RVR		12,698′ *3870m* 12,577′ *3834m*	13,464′*4104m* ❶	180′ *55m*

❶ First 328′/100m unusable for take-off.

TAKE-OFF

AIR CARRIER (JAA)
All Rwys

LVP must be in force

	RL & CL	RCLM (DAY only) or RL	RCLM (DAY only) or RL
A B C	*200m (150m)*	*250m*	*400m*
D	*250m (200m)*	*300m*	

CHANGES: Communications. Note.

© JEPPESEN, 1999, 2011. ALL RIGHTS RESERVED.

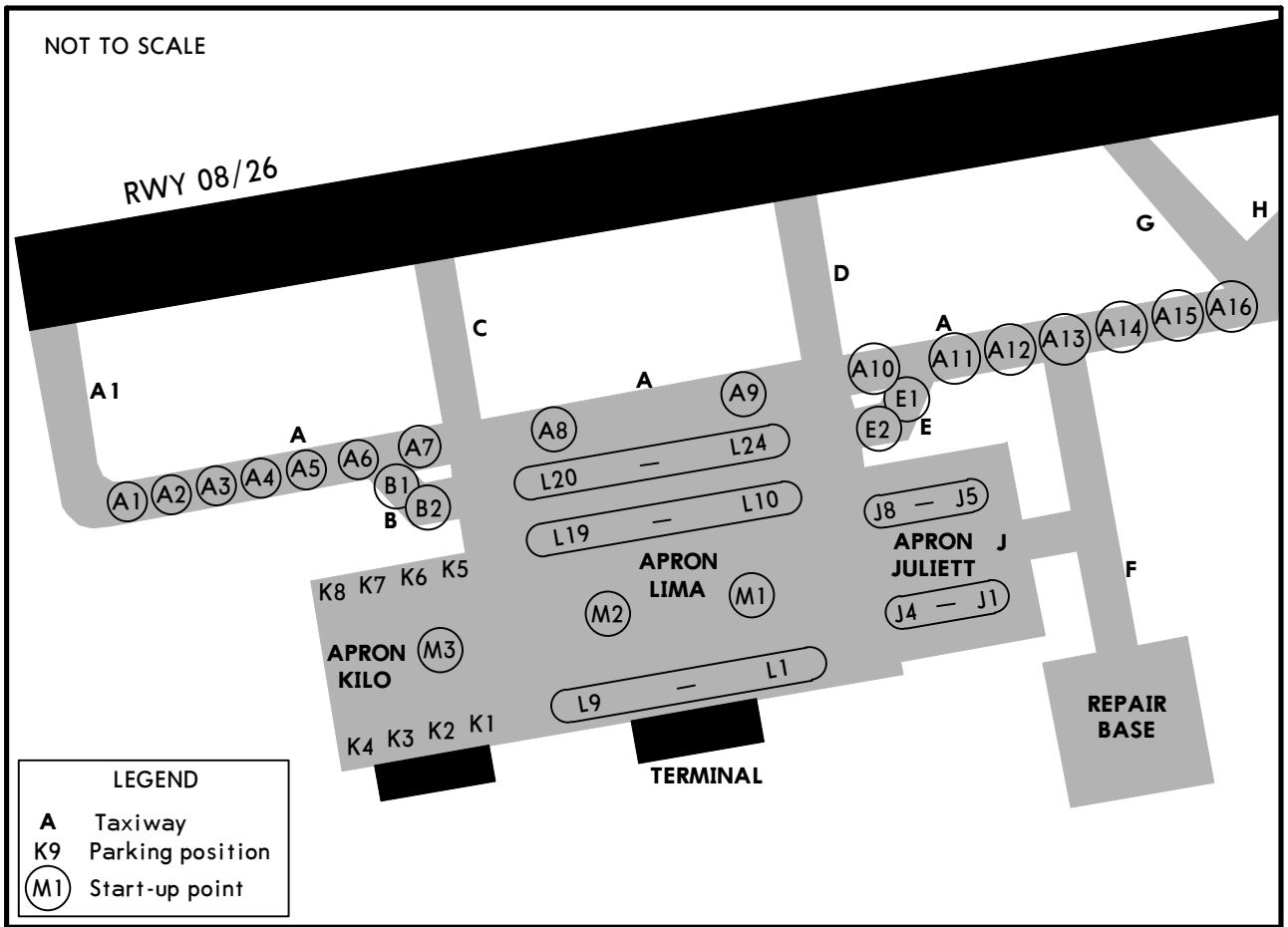

INS COORDINATES

STAND No.	COORDINATES	STAND No.	COORDINATES
	Apron Juliett		**Apron Lima**
J1 thru J4	N43 03.3 E074 28.4	L1 thru L3	N43 03.3 E074 28.3
J5, J6	N43 03.4 E074 28.5	L4, L5	N43 03.3 E074 28.2
J7, J8	N43 03.4 E074 28.4	L6 thru L8	N43 03.3 E074 28.0
		L9	N43 03.3 E074 27.1
		L10, L11	N43 03.4 E074 28.3
		L12, L13	N43 03.4 E074 28.2
		L14 thru L16	N43 03.4 E074 28.0
		L17 thru L19	N43 03.3 E074 28.0
		L20 thru L22	N43 03.4 E074 28.0
		L23, L24	N43 03.4 E074 28.2

Exit stands K1 thru K8 and L1 thru L9 and L20 by towing.
Marking of apron "Lima" is painted for taxiing of aircraft with a wingspan of 158'/48.1m or less.

CHANGES: Taxi procedures.

© JEPPESEN, 2004, 2011. ALL RIGHTS RESERVED.

STRAIGHT-IN RWY		A	B	C	D
08	CAT 2 ILS	**2190′**(100′) **RA98′ R350m**	**2190′**(100′) **RA98′ R350m**	**2190′**(100′) **RA98′ R350m**	**2190′**(100′) **RA98′ R350m**
	ILS *FULL* *Limited* *ALS out*	**2290′**(200′) **R550m** R750m R1200m	**2290′**(200′) **R550m** R750m R1200m	**2290′**(200′) **R550m** R750m R1200m	**2290′**(200′) **R550m** R750m R1200m
	LOC	NOT AUTH	NOT AUTH	NOT AUTH	NOT AUTH
	VOR ❶ *ALS out*	**2420′**(330′) **R800m** R1500m	**2420′**(330′) **R800m** R1500m	**2420′**(330′) **R800m** R1500m	**2420′**(330′) **R800m** R1500m
	NDB ❶ *ALS out*	**2420′**(330′) **R800m** R1500m	**2420′**(330′) **R800m** R1500m	**2420′**(330′) **R800m** R1500m	**2420′**(330′) **R800m** R1500m
26	CAT 2 ILS	**2155′**(100′) **RA98′ R350m**	**2155′**(100′) **RA98′ R350m**	**2155′**(100′) **RA98′ R350m**	**2155′**(100′) **RA98′ R350m**
	ILS *FULL* *Limited* *ALS out*	**2255′**(200′) **R550m** R750m R1200m	**2255′**(200′) **R550m** R750m R1200m	**2255′**(200′) **R550m** R750m R1200m	**2255′**(200′) **R550m** R750m R1200m
	LOC	NOT AUTH	NOT AUTH	NOT AUTH	NOT AUTH
	VOR ❶ *ALS out*	**2400′**(345′) **R900m** R1500m	**2400′**(345′) **R900m** R1500m	**2400′**(345′) **R900m** R1600m	**2400′**(345′) **R900m** R1600m
	NDB ❶ *ALS out*	**2400′**(345′) **R900m** R1500m	**2400′**(345′) **R900m** R1500m	**2400′**(345′) **R900m** R1600m	**2400′**(345′) **R900m** R1600m

❶ Continuous Descent Final Approach

TAKE-OFF RWY 08, 26

	Approved Operators HIRL, CL & mult. RVR req	LVP must be in Force RL, CL & mult. RVR req	RL & CL	RCLM (DAY only) or RL	RCLM (DAY only) or RL	NIL (DAY only)
A B C	125m	150m	200m	250m	400m	500m
D	150m	200m	250m	300m		

CHANGES: New page.

© JEPPESEN, 2010. ALL RIGHTS RESERVED.

BISHKEK, KYRGYZSTAN
MANAS

STRAIGHT-IN RWY		A	B	C	D
08	CAT 2 ILS DME	**2190′**(100′)	**2190′**(100′)	**2190′**(100′)	**2190′**(100′)
		RA 98′R350m	**RA 98′R350m**	**RA 98′R350m**	**RA 98′R350m**
	ILS DME	**2290′**(200′)	**2290′**(200′)	**2290′**(200′)	**2290′**(200′)
		R550m	**R550m**	**R550m**	**R550m**
	ALS out	R1000m	R1000m	R1000m	R1000m
	LOC	NOT APPLICABLE			
	VOR DME	**2420′**(330′)	**2420′**(330′)	**2420′**(330′)	**2420′**(330′)
		R900m	**R1000m**	**R1000m**	**R1400m**
	ALS out	R1500m	R1500m	R1800m	R2000m
	2 NDB	**2420′**(330′)	**2420′**(330′)	**2420′**(330′)	**2420′**(330′)
		R900m	**R1000m**	**R1000m**	**R1400m**
	ALS out	R1500m	R1500m	R1800m	R2000m
26	CAT 2 ILS DME	**2155′**(100′)	**2155′**(100′)	**2155′**(100′)	**2155′**(100′)
		RA 98′R350m	**RA 98′R350m**	**RA 98′R350m**	**RA 98′R350m**
	ILS DME	**2255′**(200′)	**2255′**(200′)	**2255′**(200′)	**2255′**(200′)
		R550m	**R550m**	**R550m**	**R550m**
	ALS out	R1000m	R1000m	R1000m	R1000m
	LOC	NOT APPLICABLE			
	VOR DME	**2400′**(345′)	**2400′**(345′)	**2400′**(345′)	**2400′**(345′)
		R900m	**R1000m**	**R1000m**	**R1400m**
	ALS out	R1500m	R1500m	R1800m	R2000m
	2 NDB	**2400′**(345′)	**2400′**(345′)	**2400′**(345′)	**2400′**(345′)
		R900m	**R1000m**	**R1000m**	**R1400m**
	ALS out	R1500m	R1500m	R1800m	R2000m

TAKE-OFF RWY 08, 26

	Approved Operators HIRL, CL & mult. RVR req	LVP must be in force: RL, CL & mult. RVR req	RL & CL	RCLM (DAY only) or RL	RCLM (DAY only) or RL	NIL (DAY only)
A, B, C	*125m*	*150m*	*200m*	*250m*	*400m*	*500m*
D	*150m*	*200m*	*250m*	*300m*		

CHANGES: CAT II minimums rwys 08/26 established.

© JEPPESEN SANDERSON, INC., 2000, 2007. ALL RIGHTS RESERVED.

BISHKEK, KYRGYZSTAN
ILS DME or 2 NDB Rwy 08

BRIEFING STRIP ™

US opr ATIS	BISHKEK Approach (R)	RADAR Liaison	BISHKEK (TWR)	TWR Liaison	Ground
128.7	124.6	132.6	118.1	132.6	121.7

LOC IMN **111.7**	Final Apch Crs **075°**	GS **LOM** 2812′ *(722′)*	ILS DA(H) 2290′ *(200′)*	Apt Elev 2090′
NDB MN **975**		Minimum Alt **D3.9 IMN** 3410′ *(1320′)*	NDB MDA(H) 2420′ *(330′)*	RWY **2090′**

MISSED APCH: Climb on 075° to 2750′ *(660′)*, then turn LEFT onto 255° climbing to 4390′ *(2300′)*, then as directed.

170°, 4500′, 5900′, 045°, 310°, 13,200′
MSA
ARP

Alt Set: MM (hPa on req) QNH on req **(QFE)** Trans level: FL 60 Trans alt: 4390′ *(2300′)*

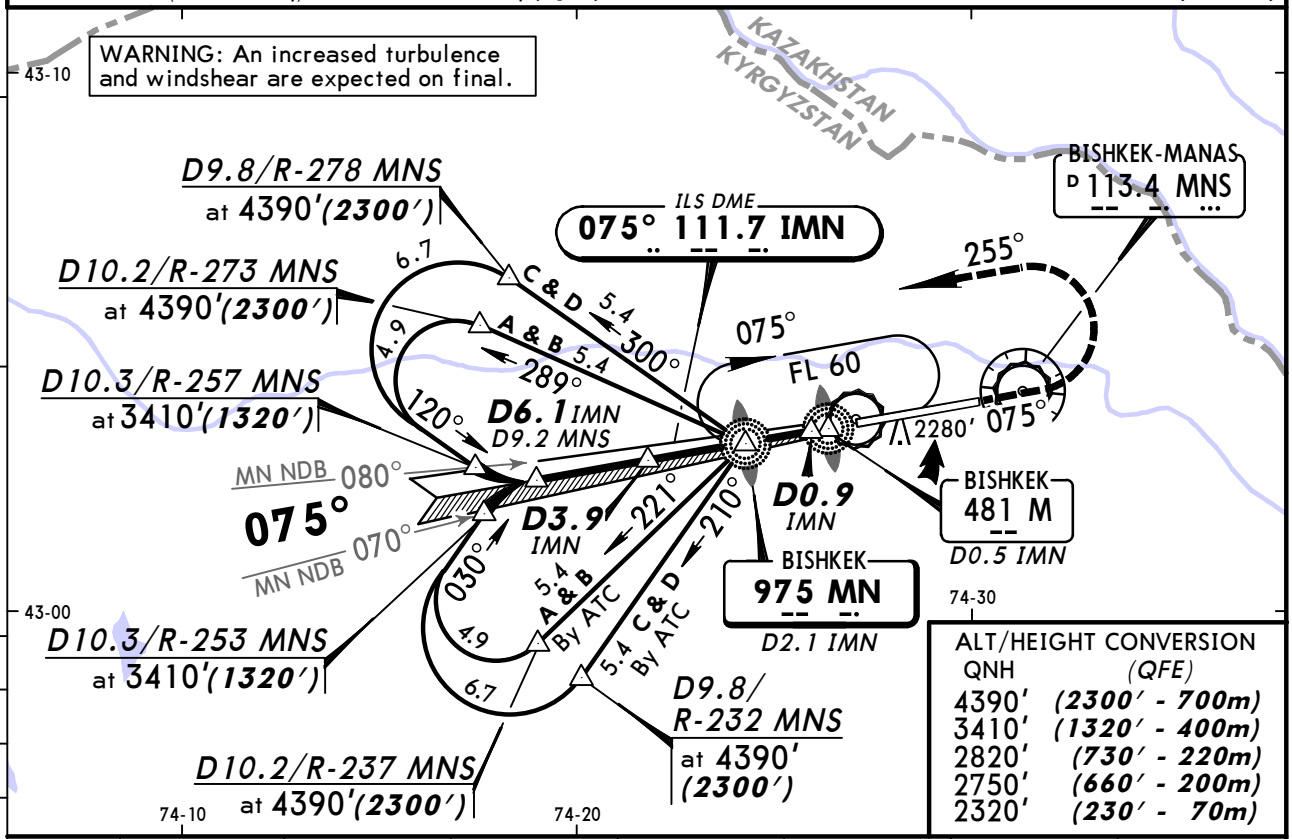

ALT/HEIGHT CONVERSION

QNH	(QFE)
4390′	(2300′ - 700m)
3410′	(1320′ - 400m)
2820′	(730′ - 220m)
2750′	(660′ - 200m)
2320′	(230′ - 70m)

NDB	IMN DME	3.4	2.9	2.3	1.8	1.2	0.7
	ALTITUDE *(HAT)*	3230′ *(1140′)*	3060′ *(970′)*	2890′ *(800′)*	2710′ *(620′)*	2540′ *(450′)*	2370′ *(280′)*

NDB apch: Pass LMM not below 2320′ *(230′)*.

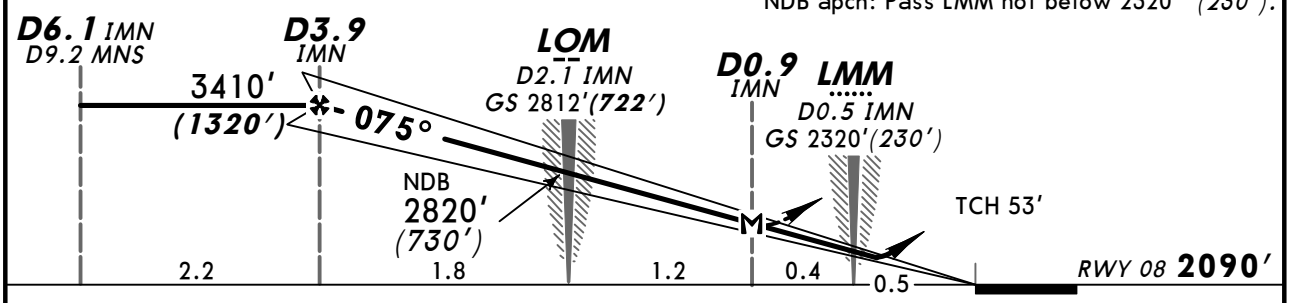

Gnd speed-Kts	70	90	100	120	140	160
ILS GS or NDB Desc Angle 3.00°	377	484	538	646	753	861
MAP at D0.9 IMN						

HIALS-II
PAPI

2750′ *(660′)* on **075°**

4390′ *(2300′)* onto **255°**
LT

STRAIGHT-IN LANDING RWY **08**

PANS OPS

	ILS DA(H) 2290′ *(200′)* FULL	ILS TDZ or CL out	ILS ALS out	LOC (GS out)	NDB MDA(H) 2420′ *(330′)*	NDB ALS out
A	RVR *550m* VIS *800m*	RVR *720m* VIS *800m*	*1200m*	NOT AUTH	*1200m*	RVR *1500m* VIS *1600m*
B						
C						
D					RVR *1500m* VIS *1600m*	

CHANGES: Communications. TL. TCH.

© JEPPESEN, 2000, 2011. ALL RIGHTS RESERVED.

BRIEFING STRIP ™

US opr ATIS	BISHKEK Approach (R)	RADAR Liaison	BISHKEK (TWR)	TWR Liaison	Ground
128.7	124.6	132.6	118.1	132.6	121.7

LOC IMN	Final Apch Crs	GS LOM	CAT II ILS RA 98′ DA(H)	Apt Elev 2090′ RWY 2090′
111.7	075°	2812′(722′)	2190′(100′)	

MISSED APCH: Climb on 075° to 2750′ (660′), then turn LEFT onto 255° climbing to 4390′ (2300′), then as directed.

Alt Set: MM (hPa on req) QNH on req (**QFE**) Trans level: FL 60 Trans alt: 4390′(2300′)
WARNING: An increased turbulence and windshear are expected on final.

170°
4500′ 5900′
045° 310°
13,200′
MSA ARP

Special Aircrew & Ccft Certification Required.

KAZAKHSTAN
KYRGYZSTAN

43-10
43-00
74-10
74-20
74-30

D9.8/R-278 MNS at 4390′(2300′)
D10.2/R-273 MNS at 4390′(2300′)
D10.3/R-257 MNS at 3410′(1320′)
D10.3/R-253 MNS at 3410′(1320′)
D10.2/R-237 MNS at 4390′(2300′)
D9.8/R-232 MNS at 4390′(2300′)

ILS DME
075° 111.7 IMN

BISHKEK-MANAS
D 113.4 MNS

255°
075°
FL 60
2280′
075°
C & D 5.4 300°
A & B 5.4 289°
6.7
4.9
120°
D6.1 IMN
D9.2 MNS
MN NDB 080°
075°
MN NDB 070°
D3.9 IMN
221°
210°
030°
5.4 A & B By ATC
5.4 C & D By ATC
4.9
6.7

BISHKEK
481 M
D0.5 IMN

BISHKEK
975 MN
D2.1 IMN

ALT/HEIGHT CONVERSION

QNH	(QFE)
4390′	(2300′ - 700m)
3410′	(1320′ - 400m)
2750′	(660′ - 200m)

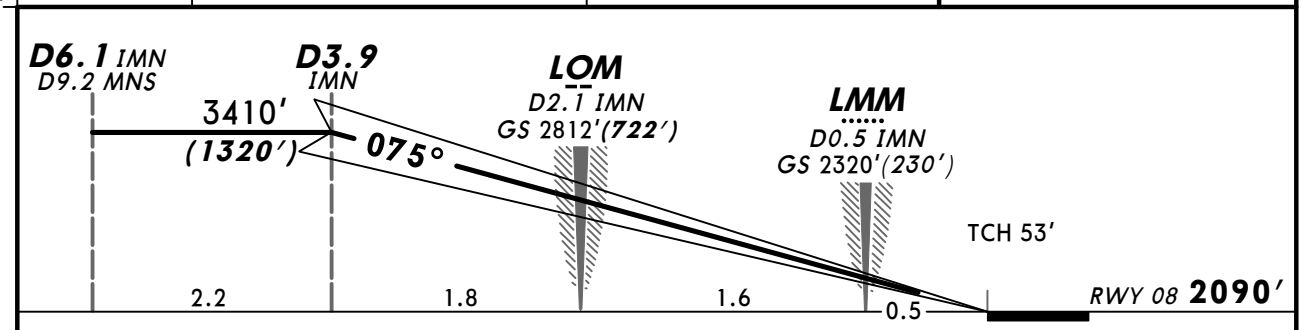

Gnd speed-Kts	70	90	100	120	140	160
GS 3.00°	377	484	538	646	753	861

HIALS-II
PAPI

2750′ (660′) on 075°

4390′ (2300′) onto 255°
LT

STRAIGHT-IN LANDING RWY 08
CAT II ILS
ABCD
RA 98′
DA(H) 2190′(100′)

RVR 350m

PANS OPS

CHANGES: Communications. TL. TCH.

© JEPPESEN, 2007, 2011. ALL RIGHTS RESERVED.

UAFM/FRU
MANAS

JEPPESEN

2 MAR 12
Eff 8 Mar

(11-2)

BISHKEK, KYRGYZSTAN
ILS or 2 NDB Rwy 26

US opr ATIS	BISHKEK Approach (R)	RADAR Liaison	BISHKEK (TWR)	TWR Liaison	Ground
128.7	124.6	132.6	118.1	132.6	121.7

BRIEFING STRIP ™

LOC IBK **111.7**	Final Apch Crs **255°**	GS **LOM** 2793′ (738′)	ILS DA(H) 2255′ (200′)	Apt Elev 2090′
NDB BK **975**		Minimum Alt **D3.1 MNS** 3370′ (1315′)	NDB MDA(H) 2400′ (345′)	RWY **2055′**

MISSED APCH: Climb on 255° to 2720′ (665′), then turn RIGHT onto 075° climbing to 4390′ (2335′), then as directed.

170° 4500′ 5900′ 045° 310° 13,200′
MSA
ARP

Alt Set: MM (hPa on req) QNH on req (**QFE**) Trans level: FL 60 Trans alt: 4390′ (2335′)

ALT/HEIGHT CONVERSION

QNH	(QFE)
4390′	(2335′ - 700m)
3370′	(1315′ - 400m)
2800′	(745′ - 225m)
2720′	(665′ - 200m)
2290′	(235′ - 70m)

WARNING: An increased turbulence and windshear are expected on final.

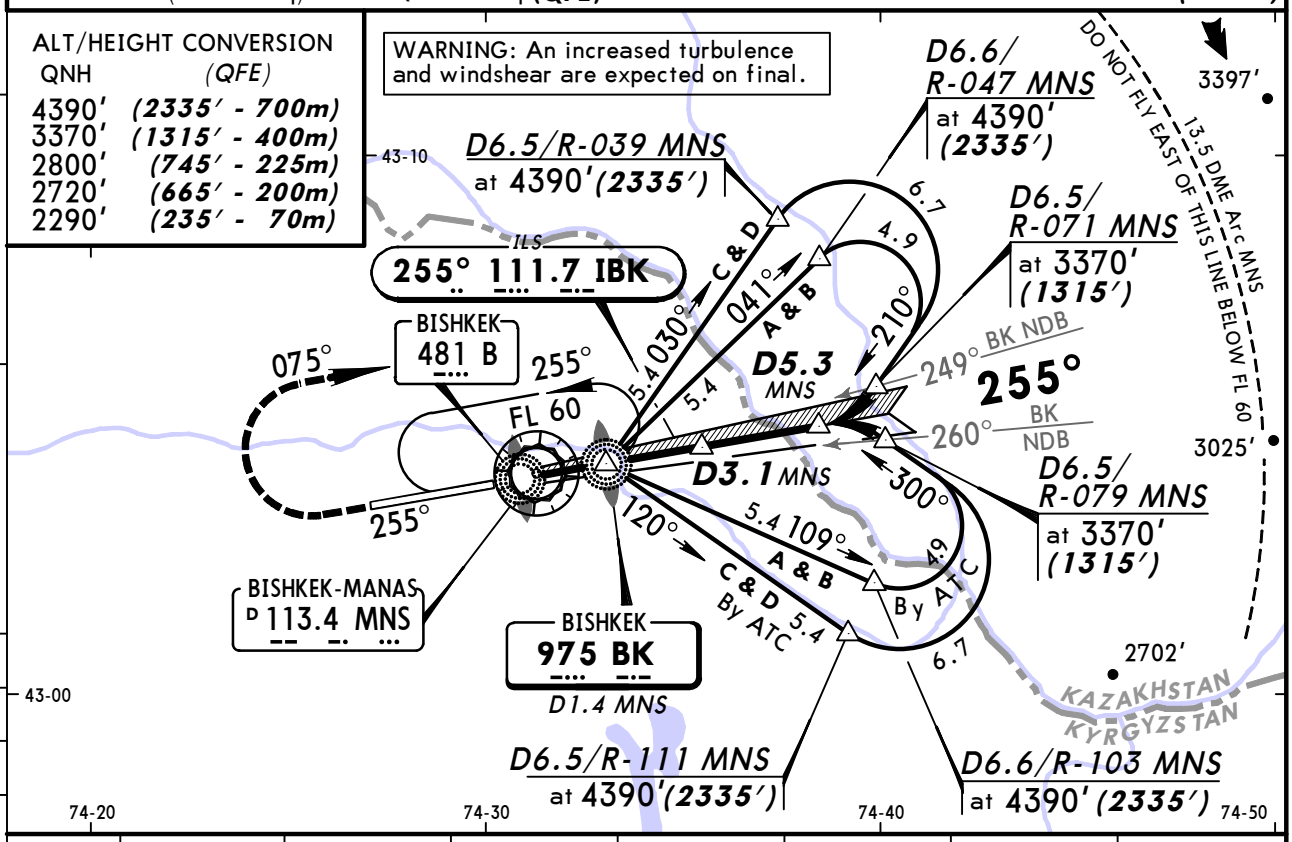

NDB	MNS DME	0.0	0.5	1.1	1.6	2.1	2.7
	ALTITUDE (HAT)	2370′ (315′)	2550′ (495′)	2720′ (665′)	2890′ (835′)	3060′ (1005′)	3240′ (1185′)

NDB apch: Pass LMM not below 2290′ (235′).

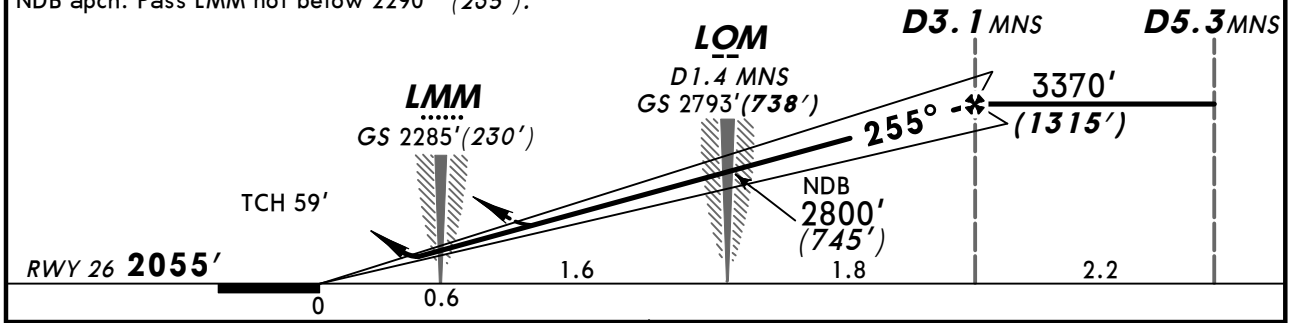

Gnd speed-Kts	70	90	100	120	140	160
ILS GS or NDB Desc Angle 3.00°	377	484	538	646	753	861

HIALS-II PAPI

2720′ (665′) on 255°

4390′ (2335′) onto 075° RT

STRAIGHT-IN LANDING RWY 26

PANS OPS

	ILS DA(H) 2255′ (200′) FULL	ILS TDZ or CL out	ILS ALS out	LOC (GS out)	NDB MDA(H) 2400′ (345′)	NDB ALS out
A	RVR 550m VIS 800m	RVR 720m VIS 800m	1200m	NOT AUTH	1200m	RVR 1500m VIS 1600m
B						
C						
D					RVR 1500m VIS 1600m	RVR 1800m VIS 2000m

CHANGES: ILS DME withdrawn. Procedure.

© JEPPESEN, 1999, 2012. ALL RIGHTS RESERVED.

BRIEFING STRIP ™

US opr ATIS	BISHKEK Approach (R)	RADAR Liaison	BISHKEK (TWR)	TWR Liaison	Ground
128.7	124.6	132.6	118.1	132.6	121.7

LOC IBK	Final Apch Crs	GS LOM	CAT II ILS RA 98′ DA(H)	Apt Elev 2090′ RWY 2055′
111.7	255°	2793′ (738′)	2155′ (100′)	

MISSED APCH: Climb on 255° to 2720′ (665′), then turn RIGHT onto 075° climbing to 4390′ (2335′), then as directed.

Alt Set: MM (hPa on req) QNH on req **(QFE)** Trans level: FL 60 Trans alt: 4390′ (2335′)

1. WARNING: An increased turbulence and windshear are expected on final.
2. Special Aircrew & Acft Certification Required.

170° 4500′ 5900′ 045° 310° 13,200′
MSA ARP

ALT/HEIGHT CONVERSION

QNH	(QFE)
4390′	(2335′ - 700m)
3370′	(1315′ - 400m)
2720′	(665′ - 200m)

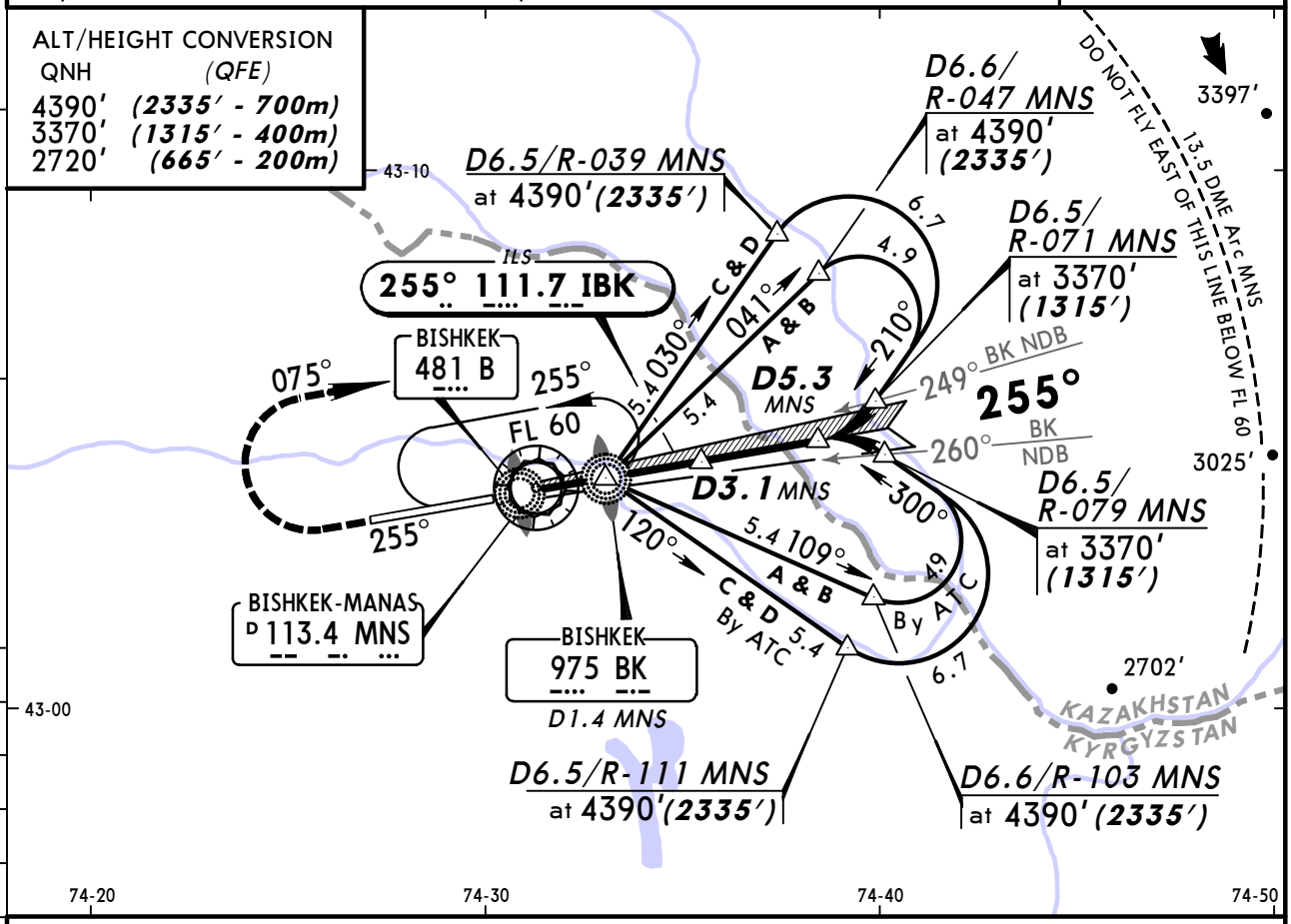

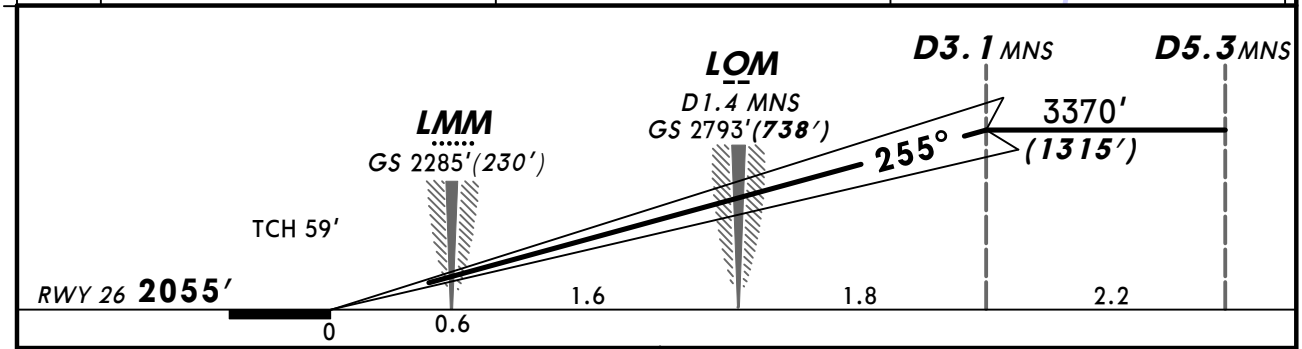

Gnd speed-Kts	70	90	100	120	140	160
GS 3.00°	377	484	538	646	753	861

HIALS-II
PAPI

2720′ (665′) on 255°

4390′ (2335′) onto 075° RT

STRAIGHT-IN LANDING RWY 26
CAT II ILS
ABCD
RA 98′
DA(H) 2155′(100′)

RVR 350m

PANS OPS

CHANGES: ILS DME withdrawn. Procedure.

© JEPPESEN, 2007, 2012. ALL RIGHTS RESERVED.

BISHKEK, KYRGYZSTAN
VOR DME Rwy 08

BRIEFING STRIP ™

US opr ATIS	BISHKEK Approach (R)	RADAR Liaison	BISHKEK (TWR)	TWR Liaison	Ground
128.7	124.6	132.6	118.1	132.6	121.7

VOR MNS	Final Apch Crs	Minimum Alt	MDA(H)	Apt Elev 2090′
113.4	075°	D7.0 3410′(1320′)	2420′(330′)	RWY 2090′

MISSED APCH: Climb on 075° to 4390′ (2300′), then turn LEFT to VOR, then according to chart or as directed.

170° 4500′ 5900′ 045° 310° 13,200′
MSA ARP

Alt Set: MM (hPa on req) QNH on req (QFE) Trans level: FL 60 Trans alt: 4390′(2300′)

ALT/HEIGHT CONVERSION
QNH (QFE)
4390′ (2300′ - 700m)
3410′ (1320′ - 400m)

WARNING: An increased turbulence and windshear are expected on final.

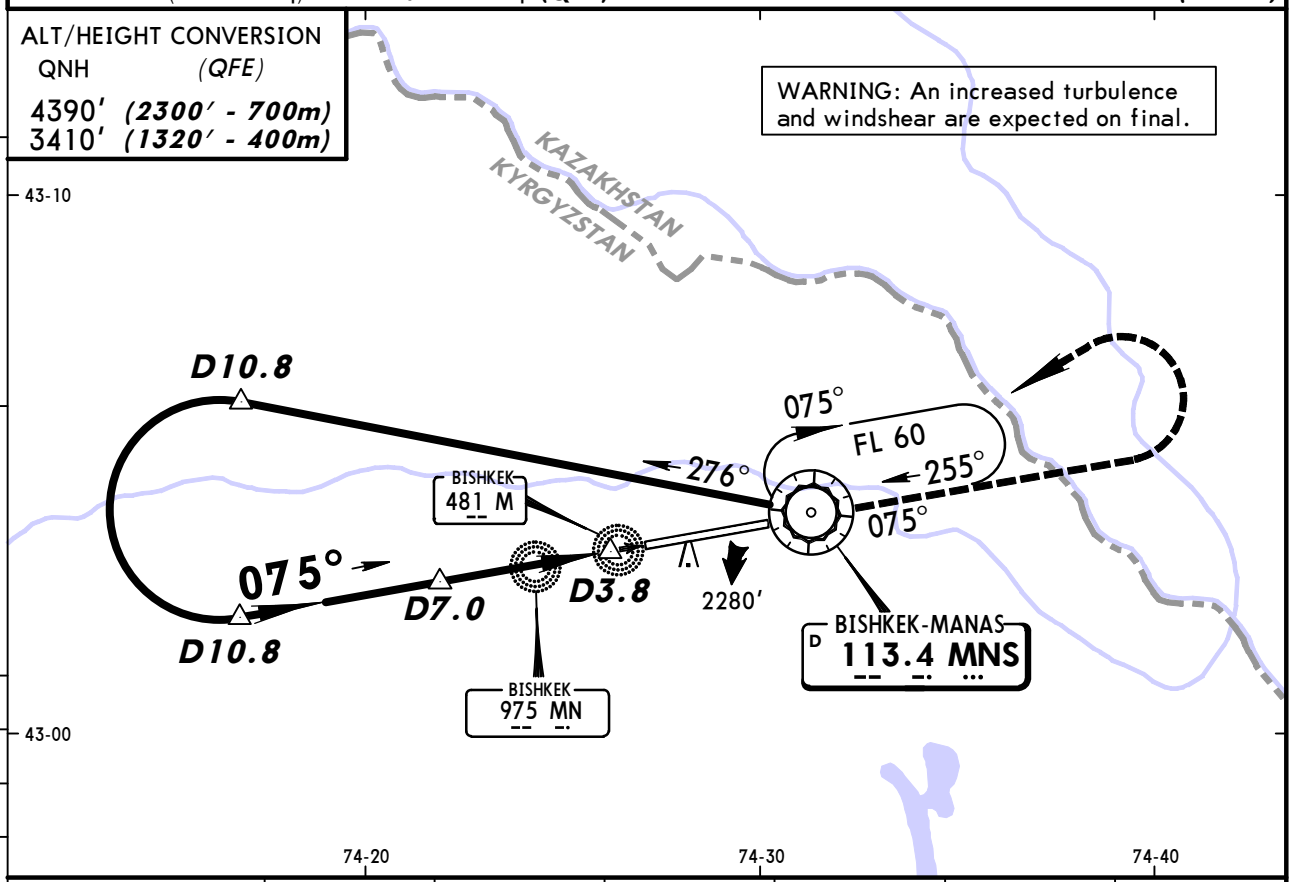

MNS DME	6.5	5.9	5.4	4.9	4.3	3.8
ALTITUDE (HAT)	3230′(1140′)	3060′(970′)	2890′(800′)	2710′(620′)	2540′(450′)	2370′(280′)

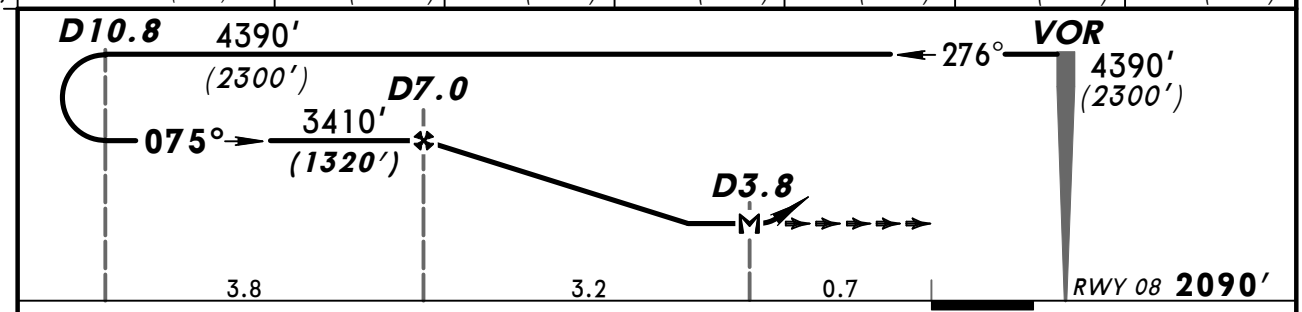

Gnd speed-Kts		70	90	100	120	140	160
Descent Angle	3.00°	369	474	527	632	737	843
MAP at D3.8							

HIALS-II
PAPI
4390′ (2300′) on 075°
MNS 113.4 LT

STRAIGHT-IN LANDING RWY 08

MDA(H) 2420′(330′)

PANS OPS

		ALS out
A	RVR 720m VIS 800m	RVR 1500m VIS 1600m
B		
C		
D	RVR 1500m VIS 1600m	

CHANGES: Communications. TL.

© JEPPESEN, 2000, 2011. ALL RIGHTS RESERVED.

BRIEFING STRIP ™

US opr ATIS	BISHKEK Approach (R)	RADAR Liaison	BISHKEK (TWR)	TWR Liaison	Ground
128.7	124.6	132.6	118.1	132.6	121.7

VOR	Final Apch Crs	Minimum Alt	MDA(H)	Apt Elev 2090'
MNS 113.4	255°	D3.1 3370'(1315')	2400'(345')	RWY 2055'

MISSED APCH: Climb on 255° to 2720'(665'), then turn RIGHT climbing to 4390' (2335') to VOR, then according to chart or as directed.

170° 4500' 5900' 045° 310° 13,200'
MSA ARP

Alt Set: MM (hPa on req) QNH on req (QFE) Trans level: FL 60 Trans alt: 4390'(2335')

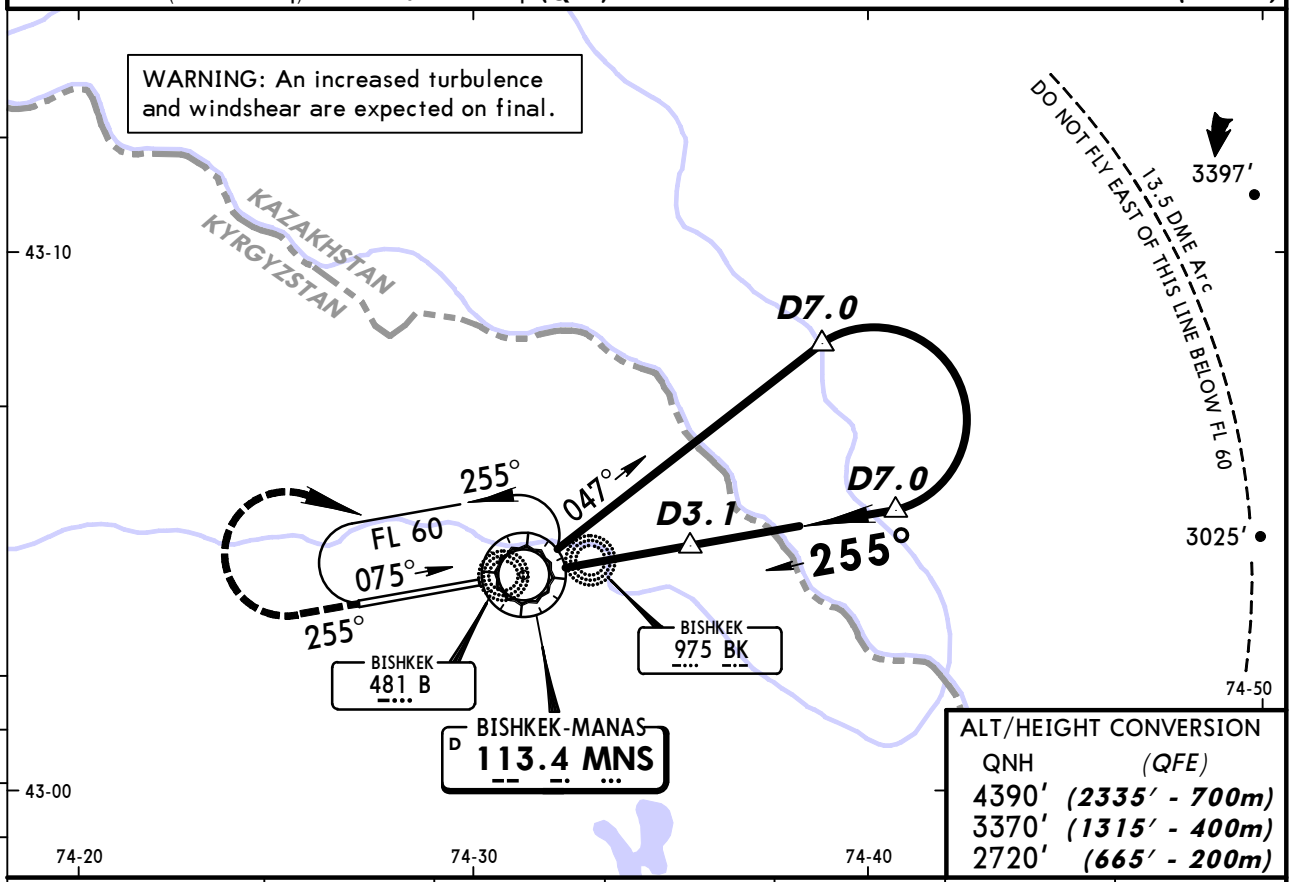

ALT/HEIGHT CONVERSION

QNH	(QFE)
4390'	(2335' - 700m)
3370'	(1315' - 400m)
2720'	(665' - 200m)

MNS DME	0.0	0.5	1.1	1.6	2.2	2.7
ALTITUDE (HAT)	2370'(315')	2550'(495')	2720'(665')	2890'(835')	3060'(1005')	3240'(1185')

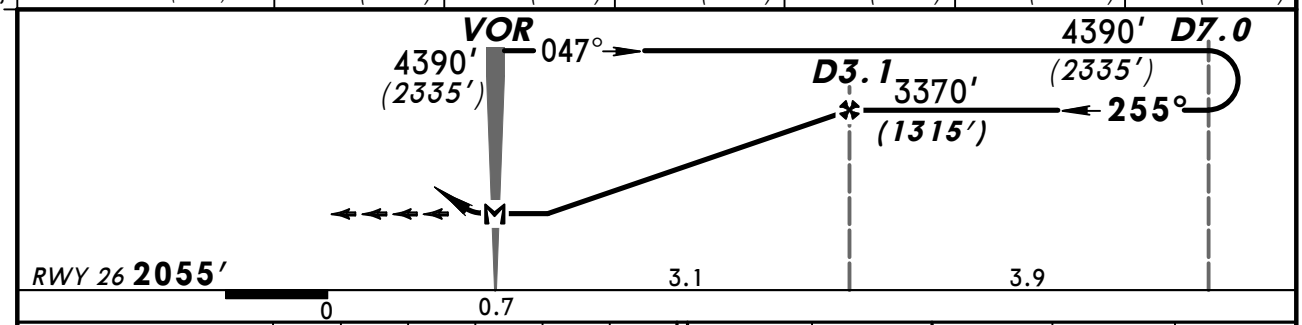

Gnd speed-Kts		70	90	100	120	140	160
Descent Angle	3.00°	369	474	527	632	737	843
MAP at VOR							

HIALS-II
PAPI

2720' (665') on 255° | 4390' (2335') RT | MNS 113.4

PANS OPS

STRAIGHT-IN LANDING RWY 26

MDA(H) 2400'(345')

		ALS out
A	RVR 720m VIS 800m	RVR 1500m VIS 1600m
B		
C		
D	RVR 1500m VIS 1600m	RVR 1800m VIS 2000m

CHANGES: Communications. TL.

© JEPPESEN, 2000, 2011. ALL RIGHTS RESERVED.

(c) JEPPESEN SANDERSON, INC., 2012, ALL RIGHTS RESERVED

Chart changes since cycle 07-2012

ADD = added chart, REV = revised chart, DEL = deleted chart.

ACT	PROCEDURE IDENT	INDEX	REV DATE	EFF DATE

BISHKEK, (MANAS - UAFM)

(c) JEPPESEN SANDERSON, INC., 2012, ALL RIGHTS RESERVED

TERMINAL CHART CHANGE NOTICES

No Chart Change Notices for Airport UAFM