(c) JEPPESEN SANDERSON, INC., 2012, ALL RIGHTS RESERVED

List of pages in this Trip Kit

Trip Kit Index
Airport Information For UMMS
Terminal Charts For UMMS
Revision Letter For Cycle 08-2012
Change Notices
Notebook

(c) JEPPESEN SANDERSON, INC., 2012, ALL RIGHTS RESERVED

General Information

Location: Minsk Blr
IATA Code: MSQ
Lat/Long: N53° 52.9' E028° 01.8'
Elevation: 670 ft

Airport Use: Public
Magnetic Variation: 7.2°E

Fuel Types: Jet A-1
Repair Types: Minor Airframe, Minor Engine
Customs: Yes
Airport Type: IFR
Landing Fee: Yes
Control Tower: Yes
Jet Start Unit: Yes
LLWS Alert: No
Beacon: No

Sunrise: 0257 Z
Sunset: 1717 Z,

Runway Information

Runway: 13
Length x Width: 11946 ft x 197 ft
Surface Type: concrete
TDZ-Elev: 640 ft
Lighting: Edge, ALS, Centerline

Runway: 31
Length x Width: 11946 ft x 197 ft
Surface Type: concrete
TDZ-Elev: 670 ft
Lighting: Edge, ALS, Centerline, TDZ

Communication Information

ATIS 135.85 Non-English
ATIS 128.85
Minsk-2 Tower 118.3
Minsk-2 Ground Control 129.95
Minsk Approach Control 125.9
Minsk Radar 125.25

ATIS	Apt Elev	
128.85 (Russian 135.85)	670′	Alt Set: MM (hPa on request) QNH on request **(QFE)** Trans level: FL50 FL60 if pressure is less than 733mm (977.3 hPa) Trans alt: 3630′ ***(2990′)*** ATC provides RADAR vectoring on request.

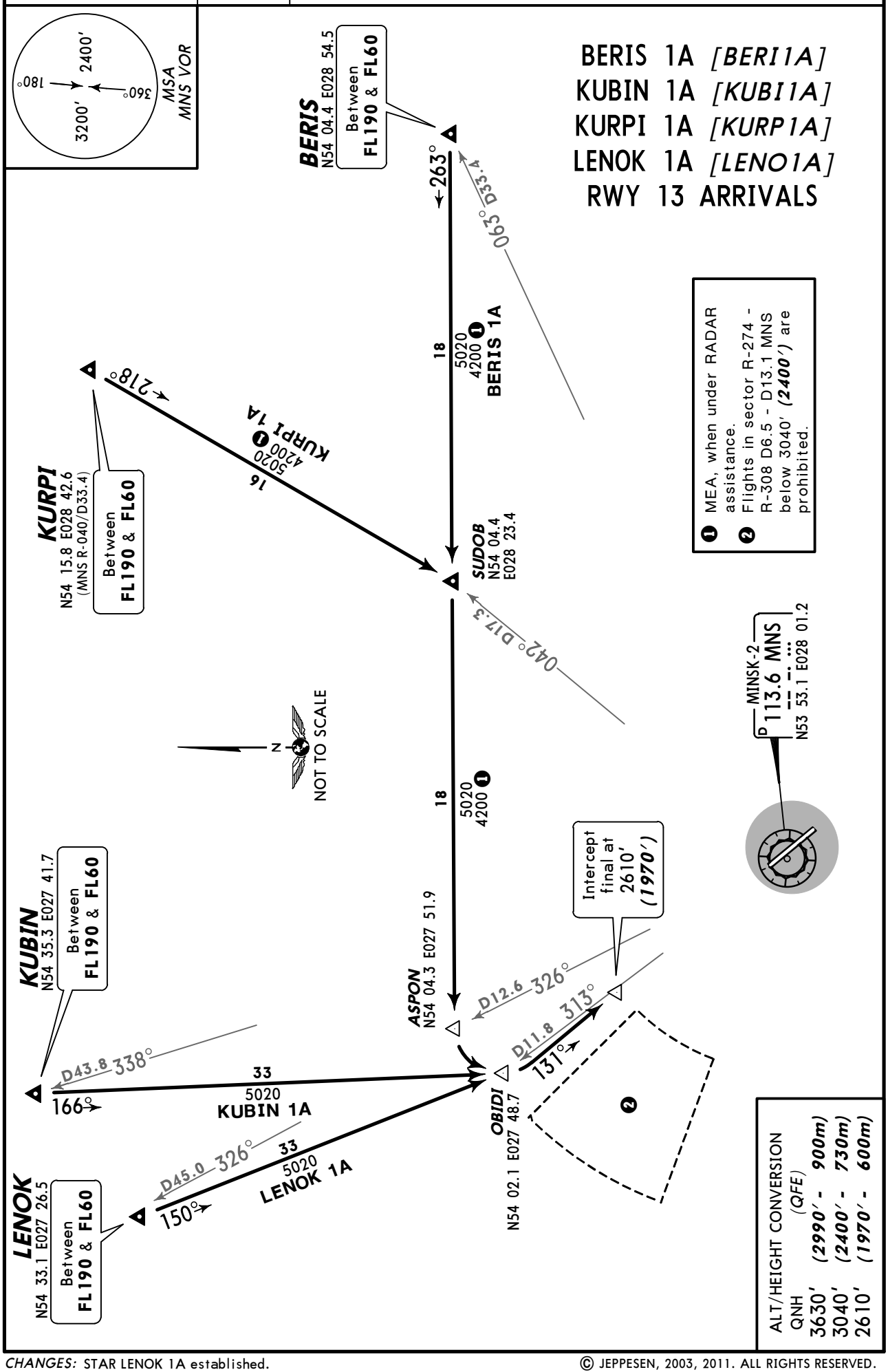

CHANGES: STAR LENOK 1A established.

© JEPPESEN, 2003, 2011. ALL RIGHTS RESERVED.

ATIS	Apt Elev	
128.85 (Russian 135.85)	670′	Alt Set: MM (hPa on request) QNH on request **(QFE)** Trans level: FL50 FL60 if pressure is less than 733mm (977.3 hPa) Trans alt: 3630′ ***(2960′)*** ATC provides RADAR vectoring on request.

BERIS 2A *[BERI2A]*, KUBIN 2A *[KUBI2A]* KURPI 2A *[KURP2A]*, LENOK 2A *[LENO2A]* RWY 31 ARRIVALS

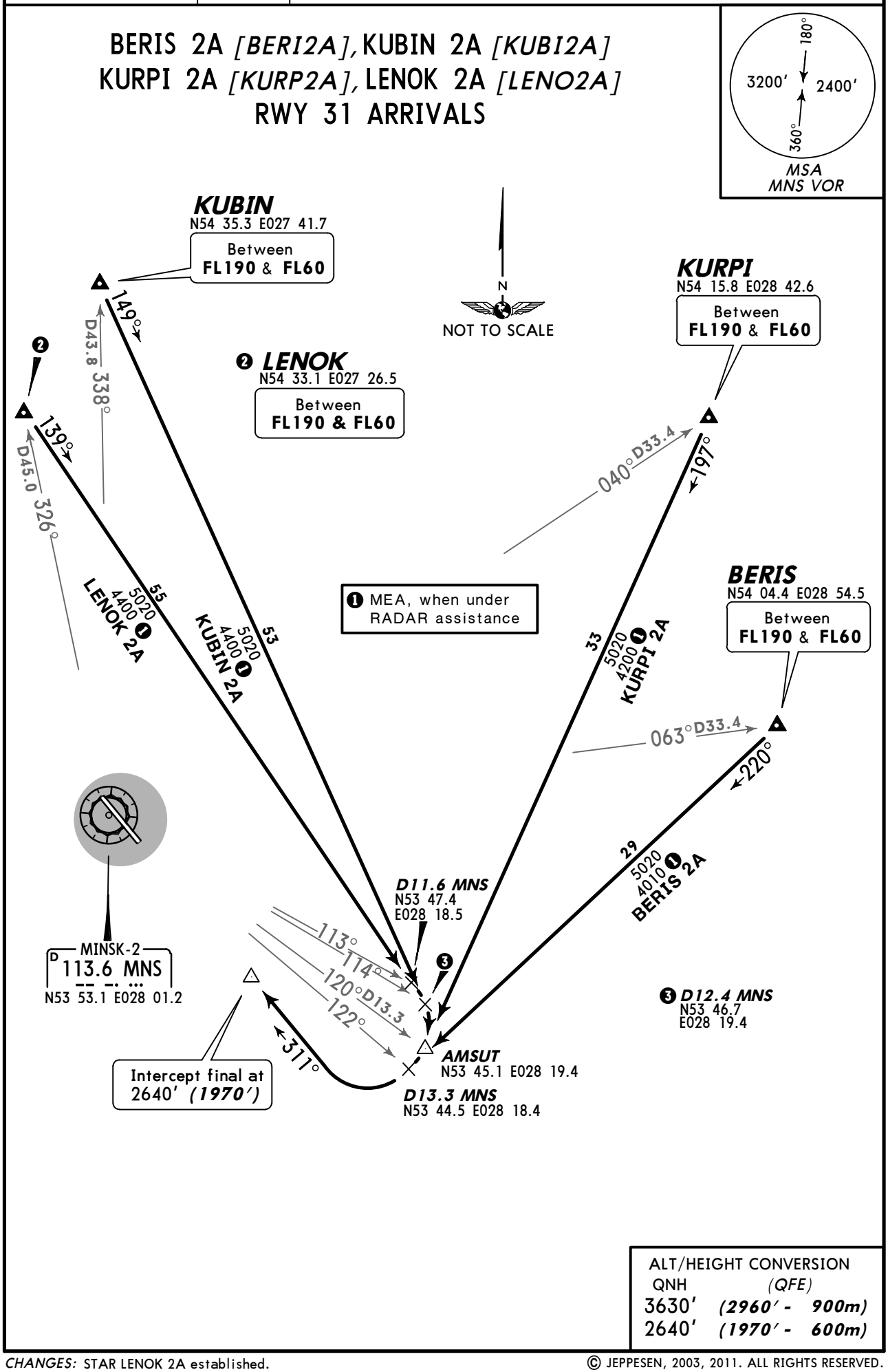

ALT/HEIGHT CONVERSION	
QNH	*(QFE)*
3630′	***(2960′ - 900m)***
2640′	***(1970′ - 600m)***

CHANGES: STAR LENOK 2A established.

© JEPPESEN, 2003, 2011. ALL RIGHTS RESERVED.

ATIS	Apt Elev	
128.85 (Russian 135.85)	670′	Alt Set: MM (hPa on request) QNH on request **(QFE)** Trans level: FL50 FL60 if pressure is less than 733mm (977.3 hPa) Trans alt: 3630′ ***(2990′)*** ATC provides radar vectoring on request.

DELON 1A *[DELO1A]*, LUPAN 1A *[LUPA1A]* ❶
NASKA 1A *[NASK1A]*, NASKA 1B *[NASK1B]*
RWY 13 ARRIVALS
FROM SOUTH

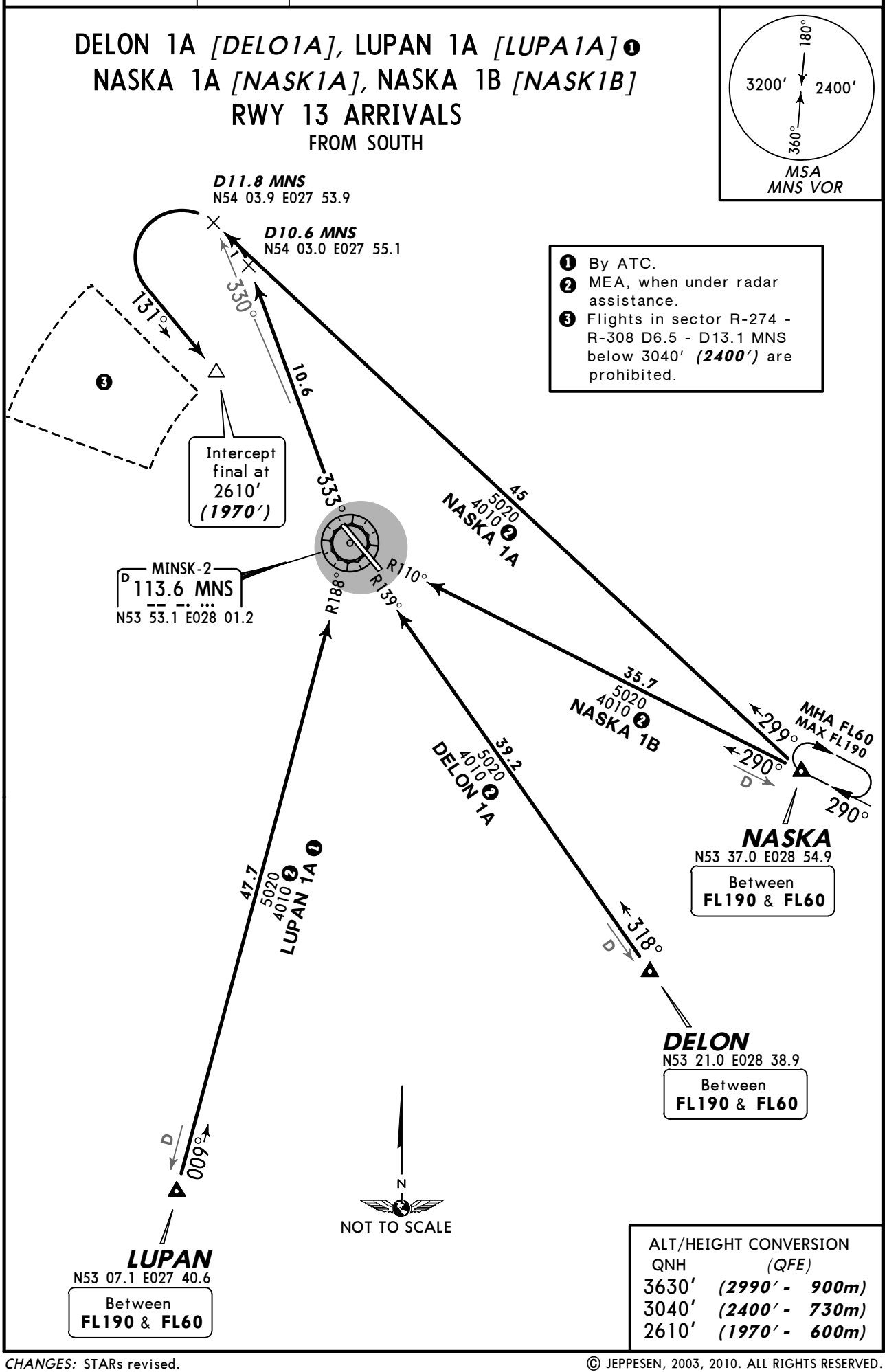

ALT/HEIGHT CONVERSION

QNH	(QFE)
3630′	***(2990′ - 900m)***
3040′	***(2400′ - 730m)***
2610′	***(1970′ - 600m)***

CHANGES: STARs revised.

© JEPPESEN, 2003, 2010. ALL RIGHTS RESERVED.

ATIS	Apt Elev	
128.85 (Russian 135.85)	670′	Alt Set: MM (hPa on request) QNH on request **(QFE)** Trans level: FL50 FL60 if pressure is less than 733mm (977.3 hPa) Trans alt: 3630′ ***(2960′)*** ATC provides radar vectoring on request.

DELON 2A *[DELO2A]*
LUPAN 2A *[LUPA2A]*❶, NASKA 2A *[NASK2A]*
RWY 31 ARRIVALS
FROM SOUTH

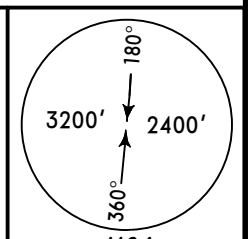

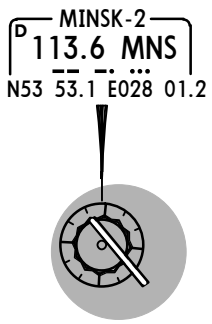

❶ By ATC.
❷ MEA, when under radar assistance.

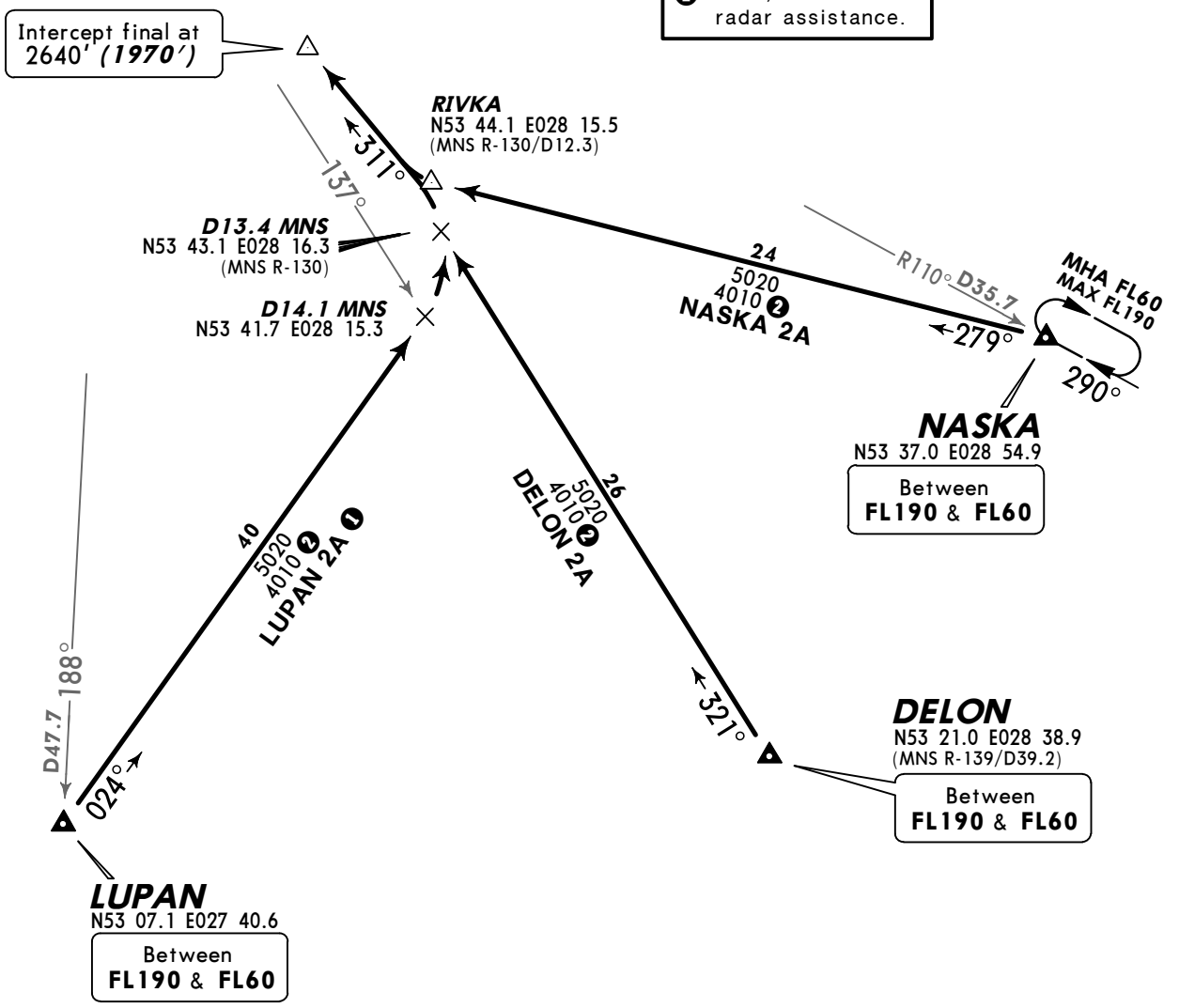

ALT/HEIGHT CONVERSION	
QNH	*(QFE)*
3630′	***(2960′ - 900m)***
2640′	***(1970′ - 600m)***

CHANGES: STARs revised.

© JEPPESEN, 2003, 2010. ALL RIGHTS RESERVED.

ATIS	Apt Elev	
128.85 (Russian 135.85)	670′	Alt Set: MM (hPa on request) QNH on request **(QFE)** Trans level: FL50 FL60 if pressure is less than 733mm (977.3 hPa) Trans alt: 3630′ ***(2990′)*** ATC provides radar vectoring on request.

GOVIK 1A *[GOVI1A]*❶, KOLOS 1A *[KOLO1A]*❶ OSMUS 1A *[OSMU1A]*, OSMUS 1B *[OSMU1B]*

RWY 13 ARRIVALS

FROM WEST

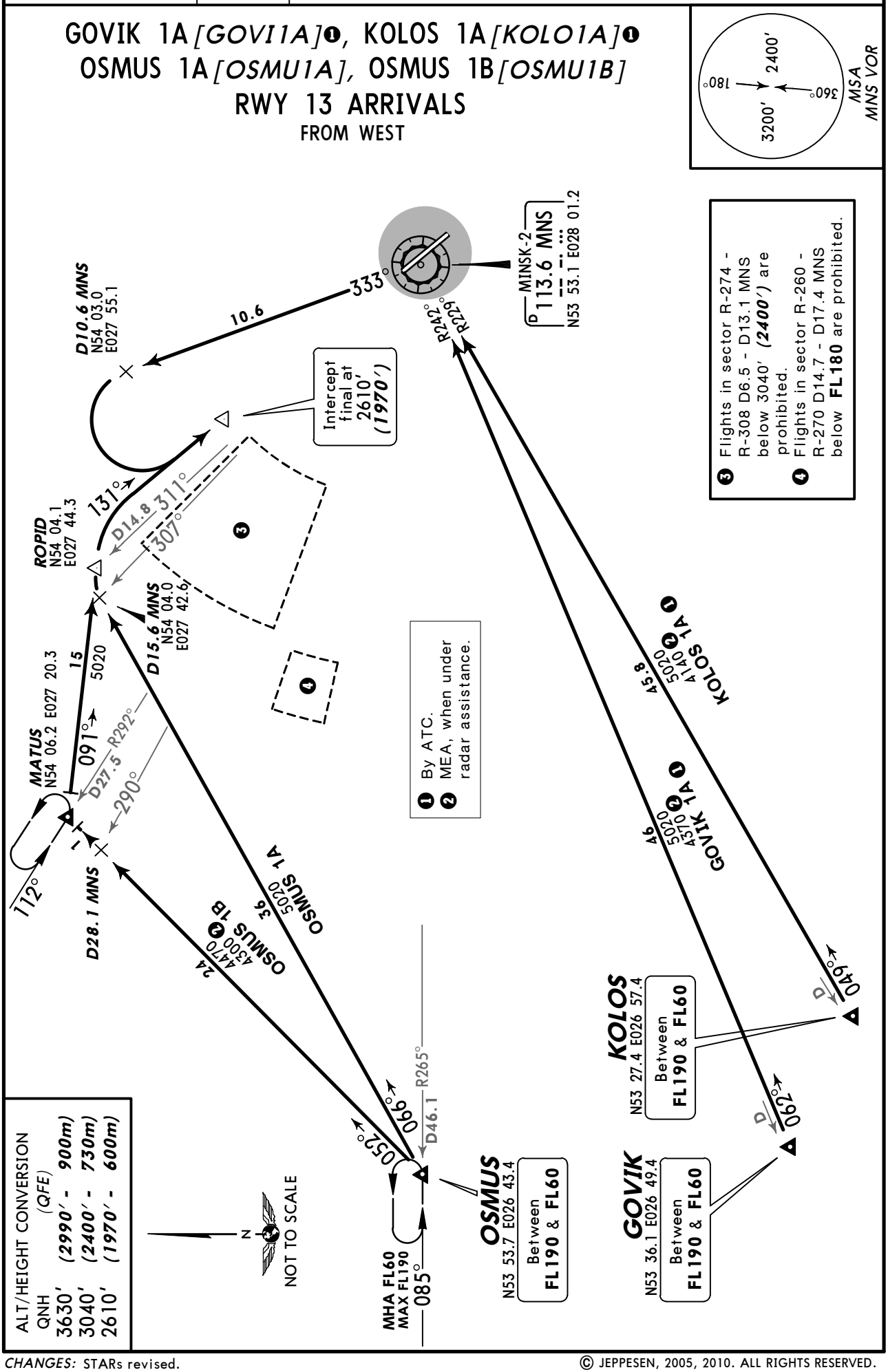

CHANGES: STARs revised.

© JEPPESEN, 2005, 2010. ALL RIGHTS RESERVED.

ATIS	Apt Elev	
128.85 (Russian 135.85)	670′	Alt Set: MM (hpa on request) QNH on request **(QFE)** Trans level: FL50 FL60 if pressure is less than 733mm (977.3 hPa) Trans alt: 3630′ ***(2960′)*** ATC provides radar vectoring on request.

GOVIK 2A *[GOVI2A]*❶, KOLOS 2A *[KOLO2A]*❶ OSMUS 2A *[OSMU2A]*, OSMUS 2B *[OSMU2B]* OSMUS 2C *[OSMU2C]* RWY 31 ARRIVALS

FROM WEST

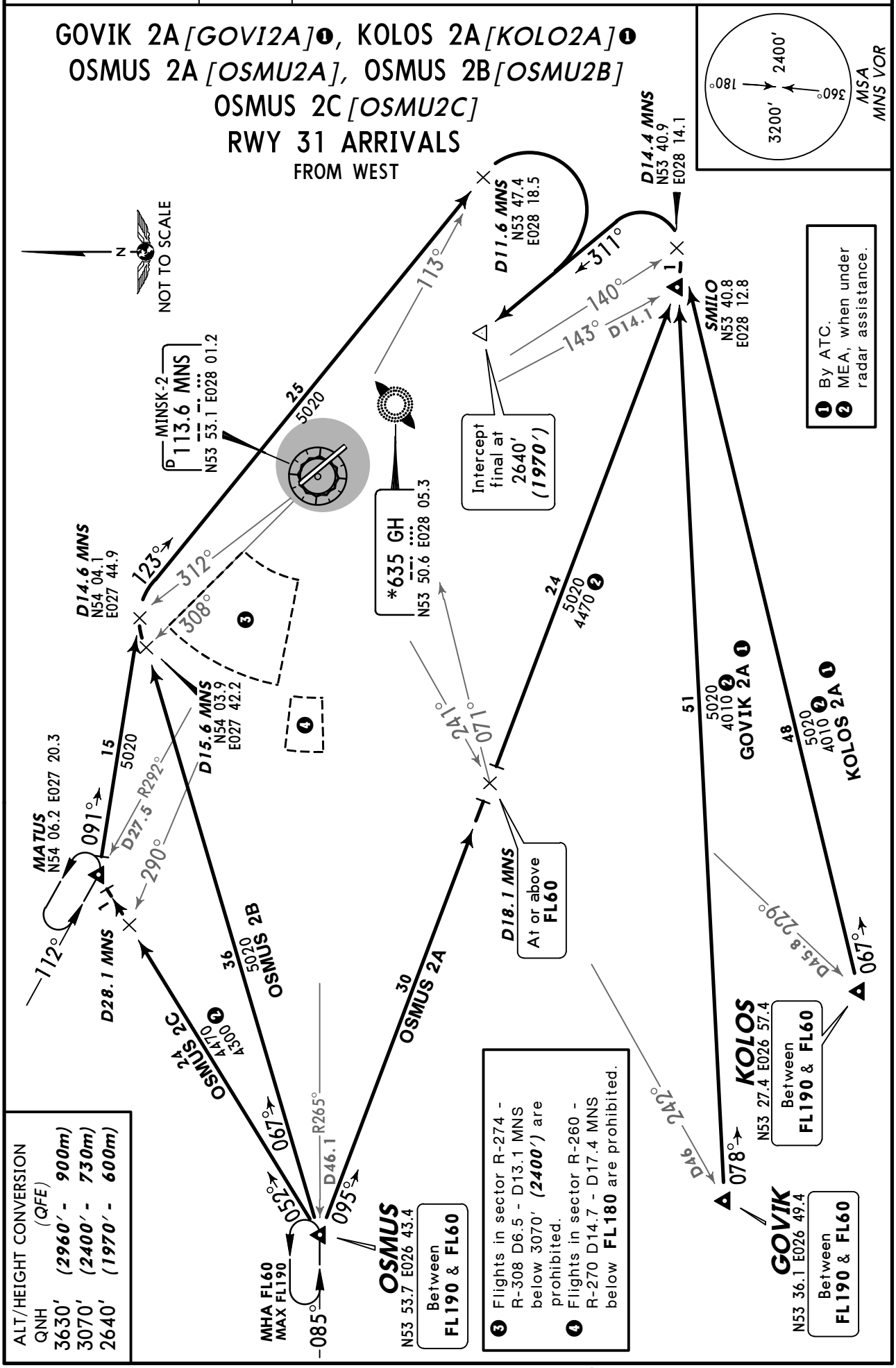

© JEPPESEN, 2005, 2010. ALL RIGHTS RESERVED.

Apt Elev 670′	QNH on request **(QFE)** Trans level: FL50 FL60 if pressure is less than 733mm (977.3 hPa) Trans alt: 3630′ ***(2990′)*** 1. ATC provides radar vectoring on request. 2. Initial turn MAX 225 KT.

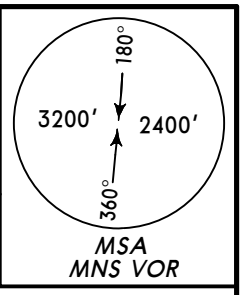

BERIS 3A *[BERI3A]*, KUBIN 3A *[KUBI3A]*
LENOK 3A *[LENO3A]*, PENAL 3A *[PENA3A]*
RWY 13 DEPARTURES
TO NORTH & EAST

LENOK
N54 33.1 E027 26.5
Between **FL60** & **FL190**

KUBIN
N54 35.3 E027 41.7
Between **FL60** & **FL190**

PENAL
N54 31.1 E028 31.3
Between **FL60** & **FL190**

LIRNI
N54 10.0 E027 59.9
At or above **FL60**

BERIS
N54 04.4 E028 54.5
Between **FL60** & **FL190**

D45 326°
D43.8 338°
018° D42
28 KUBIN 3A
28 PENAL 3A
55 LENOK 3A
330°
034°
D17 350°
25 KUBIN 3A, PENAL 3A
318°
328°
063° D33.4
33 BERIS 3A
056°
131°
1.9 DME

N
NOT TO SCALE

MINSK-2
D 113.6 MNS
-- -. ...
N53 53.1 E028 01.2

At or above
1300′ ***(660′)***
but not before
MNS 1.9 DME

ALT/HEIGHT CONVERSION

QNH	*(QFE)*
1300′	***(660′ - 200m)***
3630′	***(2990′ - 900m)***

CHANGES: SIDs revised.

© JEPPESEN, 2003, 2010. ALL RIGHTS RESERVED.

Apt Elev 670′	QNH on request **(QFE)** Trans level: FL50 FL60 if pressure is less than 733mm (977.3 hPa) Trans alt: 3630′ ***(2960′)*** 1. ATC provides radar vectoring on request. 2. Initial turn MAX 225 KT.

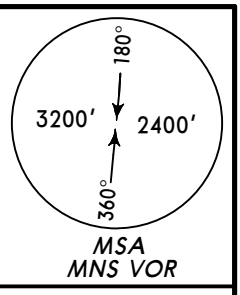

BERIS 4A *[BERI4A]*, KUBIN 4A *[KUBI4A]* LENOK 4A *[LENO4A]*, PENAL 4A *[PENA4A]* RWY 31 DEPARTURES

TO NORTH & EAST

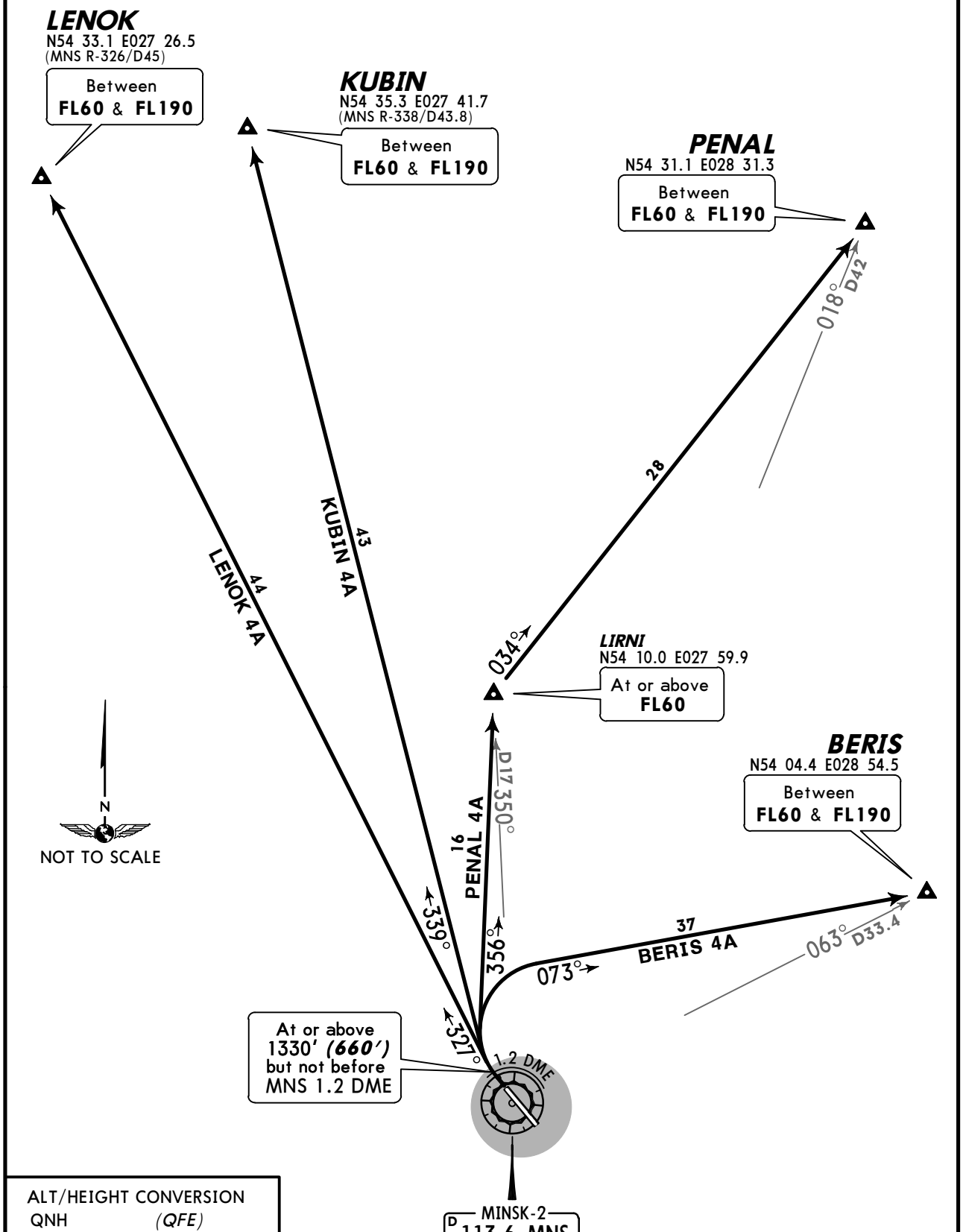

ALT/HEIGHT CONVERSION	
QNH	(QFE)
1330′	***(660′ - 200m)***
3630′	***(2960′ - 900m)***

CHANGES: SIDs revised.

© JEPPESEN, 2003, 2010. ALL RIGHTS RESERVED.

Apt Elev 670′	QNH on request **(QFE)** Trans level: FL50 FL60 if pressure is less than 733mm (977.3 hPa) Trans alt: 3630′ ***(2990′)*** 1. ATC provides radar vectoring on request. 2. Initial turn MAX 225 KT.

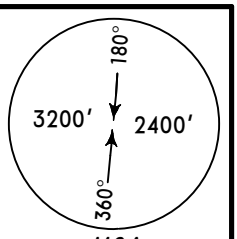

MSA
MNS VOR

DELON 3A *[DELO3A]*
LUPAN 3A *[LUPA3A]*❶, NASKA 3A *[NASK3A]*
RWY 13 DEPARTURES
TO SOUTHEAST & SOUTH

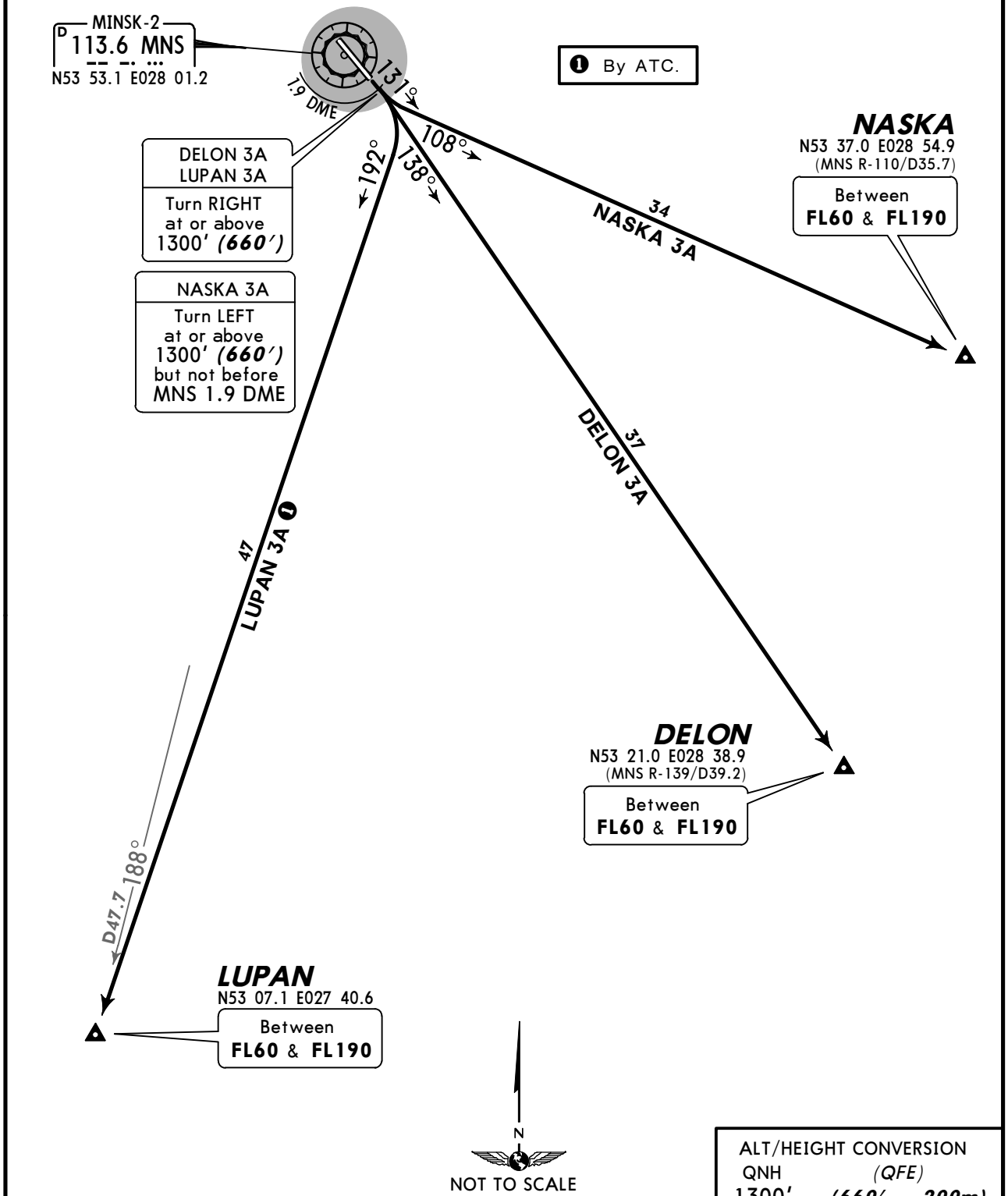

ALT/HEIGHT CONVERSION	
QNH	*(QFE)*
1300′	***(660′ - 200m)***
3630′	***(2990′ - 900m)***

CHANGES: SIDs revised.

© JEPPESEN, 2003, 2010. ALL RIGHTS RESERVED.

Apt Elev 670′	QNH on request **(QFE)** Trans level: FL50 FL60 if pressure is less than 733mm (977.3 hPa) Trans alt: 3630′ ***(2960′)*** 1. ATC provides radar vectoring on request. 2. Initial turn MAX 225 KT.

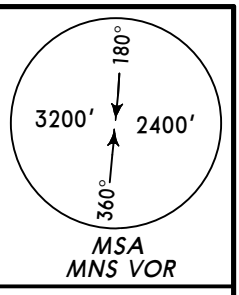

DELON 4A *[DELO4A]*
LUPAN 4A *[LUPA4A]* ❶
NASKA 4A *[NASK4A]*
RWY 31 DEPARTURES
TO SOUTHEAST & SOUTH

❶ By ATC.

❷ Flights in sector R-274 - R-308 D6.5 - D13.1 MNS below 3070′ ***(2400′)*** are prohibited.

❷ At or above 1330′ ***(660′)*** but not before MNS 1.2 DME

1.2 DME

MINSK-2
D 113.6 MNS
N53 53.1 E028 01.2

120°
147°
192°

45 NASKA 4A

NASKA
N53 37.0 E028 54.9
Between **FL60** & **FL190**

110° D35.7

50 DELON 4A

139° D39.2

DELON
N53 21.0 E028 38.9
Between **FL60** & **FL190**

63 LUPAN 4A ❶

188° D47.7

LUPAN
N53 07.1 E027 40.6
Between **FL60** & **FL190**

N
NOT TO SCALE

ALT/HEIGHT CONVERSION

QNH	*(QFE)*
1330′	***(660′ - 200m)***
3070′	***(2400′ - 730m)***
3630′	***(2960′ - 900m)***

CHANGES: SIDs revised; SID LUPAN 4B withdrawn.

© JEPPESEN, 2003, 2010. ALL RIGHTS RESERVED.

Apt Elev 670′	QNH on request **(QFE)** Trans level: FL50 FL60 if pressure is less than 733mm (977.3 hPa) Trans alt: 3630′ ***(2990′)*** 1. ATC provides radar vectoring on request. 2. Initial turn MAX 225 KT.

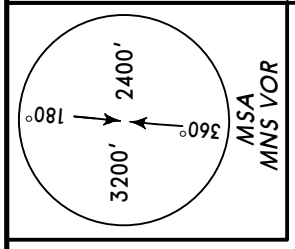

GOVIK 3A *[GOVI3A]*
KOLOS 3A *[KOLO3A]*
RWY 13 DEPARTURES
TO SOUTHWEST
BY ATC

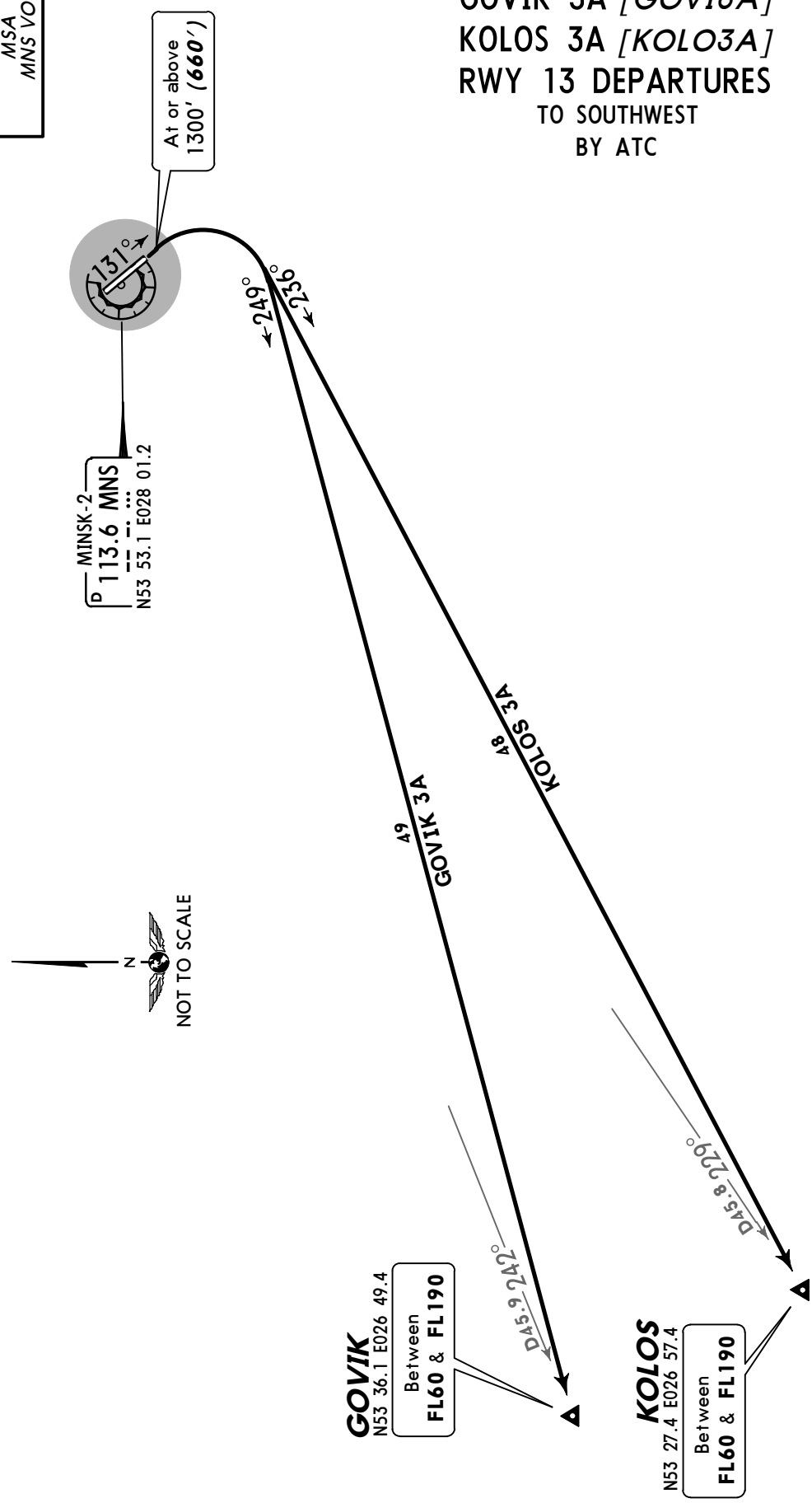

ALT/HEIGHT CONVERSION
QNH *(QFE)*
1300′ ***(660′ - 200m)***
3630′ ***(2990′ - 900m)***

CHANGES: SIDs revised.

© JEPPESEN, 2003, 2010. ALL RIGHTS RESERVED.

Apt Elev
670′

QNH on request **(QFE)**
Trans level: FL50
FL60 if pressure is less than 733mm (977.3 hPa)
Trans alt: 3630′ ***(2960′)***
1. ATC provides radar vectoring on request.
2. Initial turn MAX 225 KT.

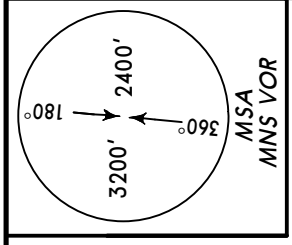

GOVIK 4A *[GOVI4A]*, KOLOS 4A *[KOLO4A]*
RWY 31 DEPARTURES
TO SOUTHWEST
BY ATC

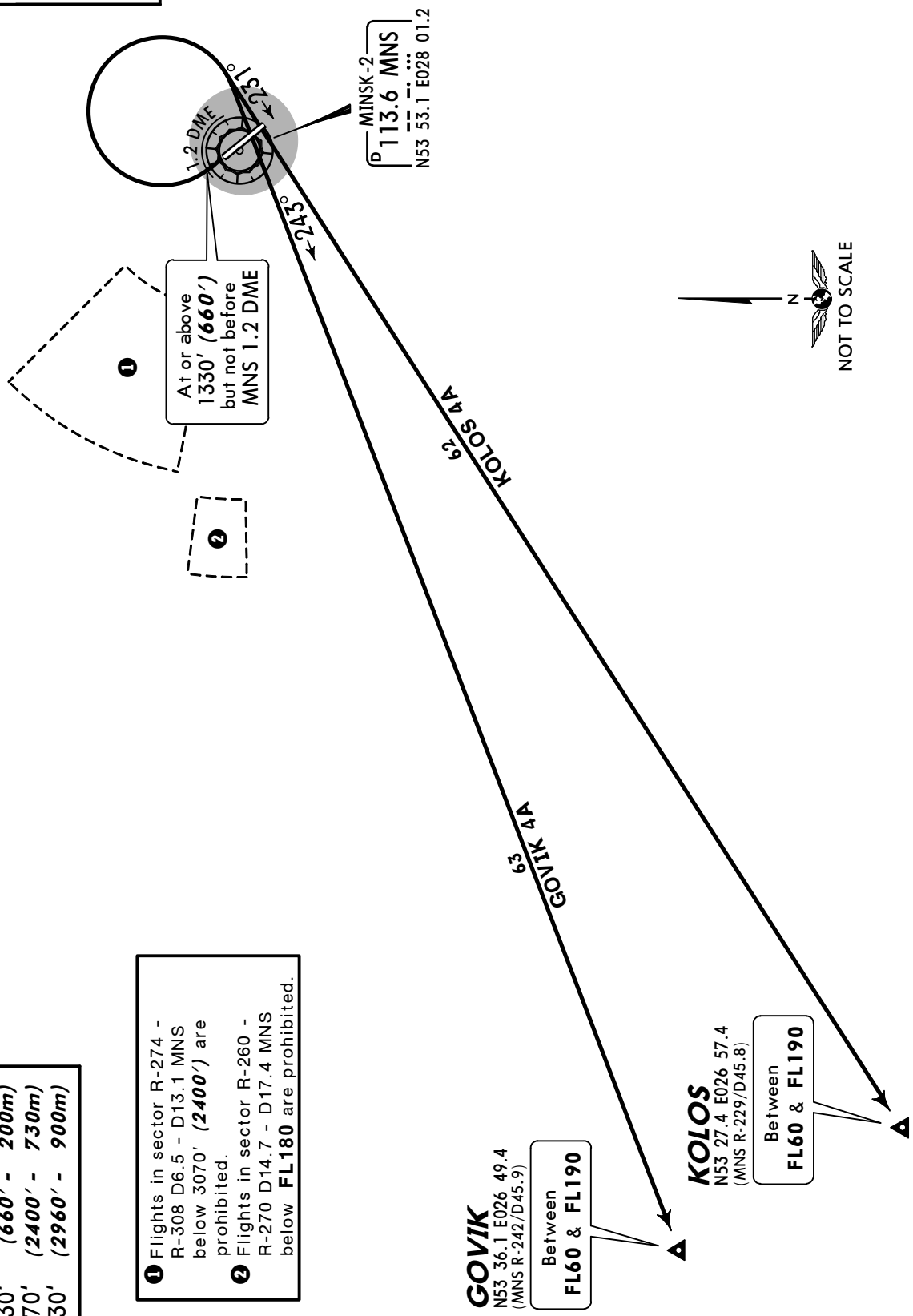

❶ Flights in sector R-274 - R-308 D6.5 - D13.1 MNS below 3070′ ***(2400′)*** are prohibited.
❷ Flights in sector R-260 - R-270 D14.7 - D17.4 MNS below **FL180** are prohibited.

ALT/HEIGHT CONVERSION
(*QFE*)

QNH		
1330′	***(660′ - 200m)***	
3070′	***(2400′ - 730m)***	
3630′	***(2960′ - 900m)***	

CHANGES: SIDs revised; SID KOLOS 4B withdrawn.

© JEPPESEN, 2003, 2010. ALL RIGHTS RESERVED.

Apt Elev 670′	QNH on request **(QFE)** Trans level: FL50 FL60 if pressure is less than 733mm (977.3 hPa) Trans alt: 3630′ ***(2990′)*** 1. ATC provides radar vectoring on request. 2. Initial turn MAX 225 KT.

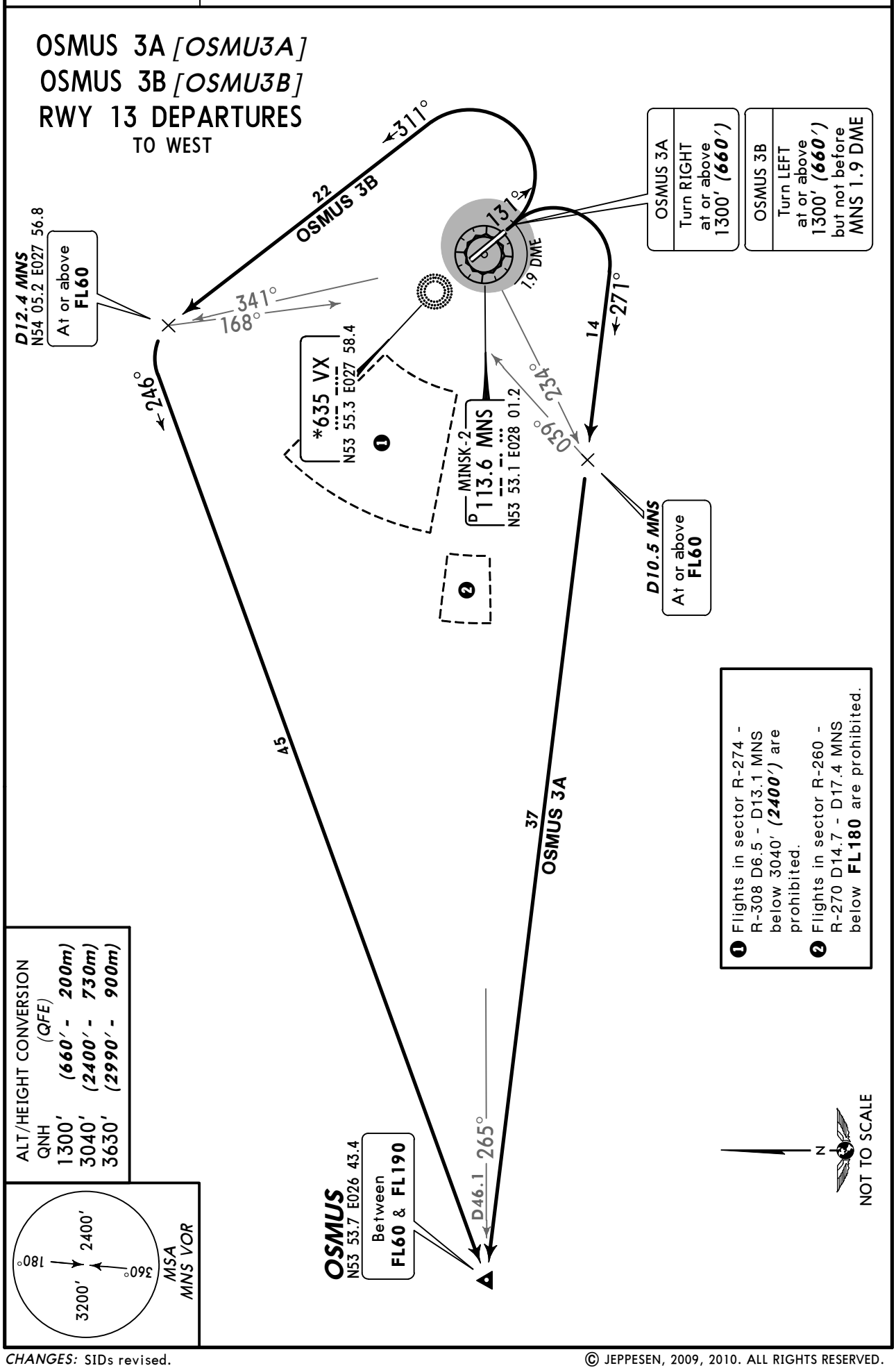

© JEPPESEN, 2009, 2010. ALL RIGHTS RESERVED.

Apt Elev 670′	QNH on request **(QFE)** Trans level: FL50 FL60 if pressure is less than 733mm (977.3 hPa) Trans alt: 3630′ ***(2960′)*** 1. ATC provides radar vectoring on request. 2. Initial turn MAX 225 KT.

OSMUS 4A *[OSMU4A]*
RWY 31 DEPARTURE
TO WEST

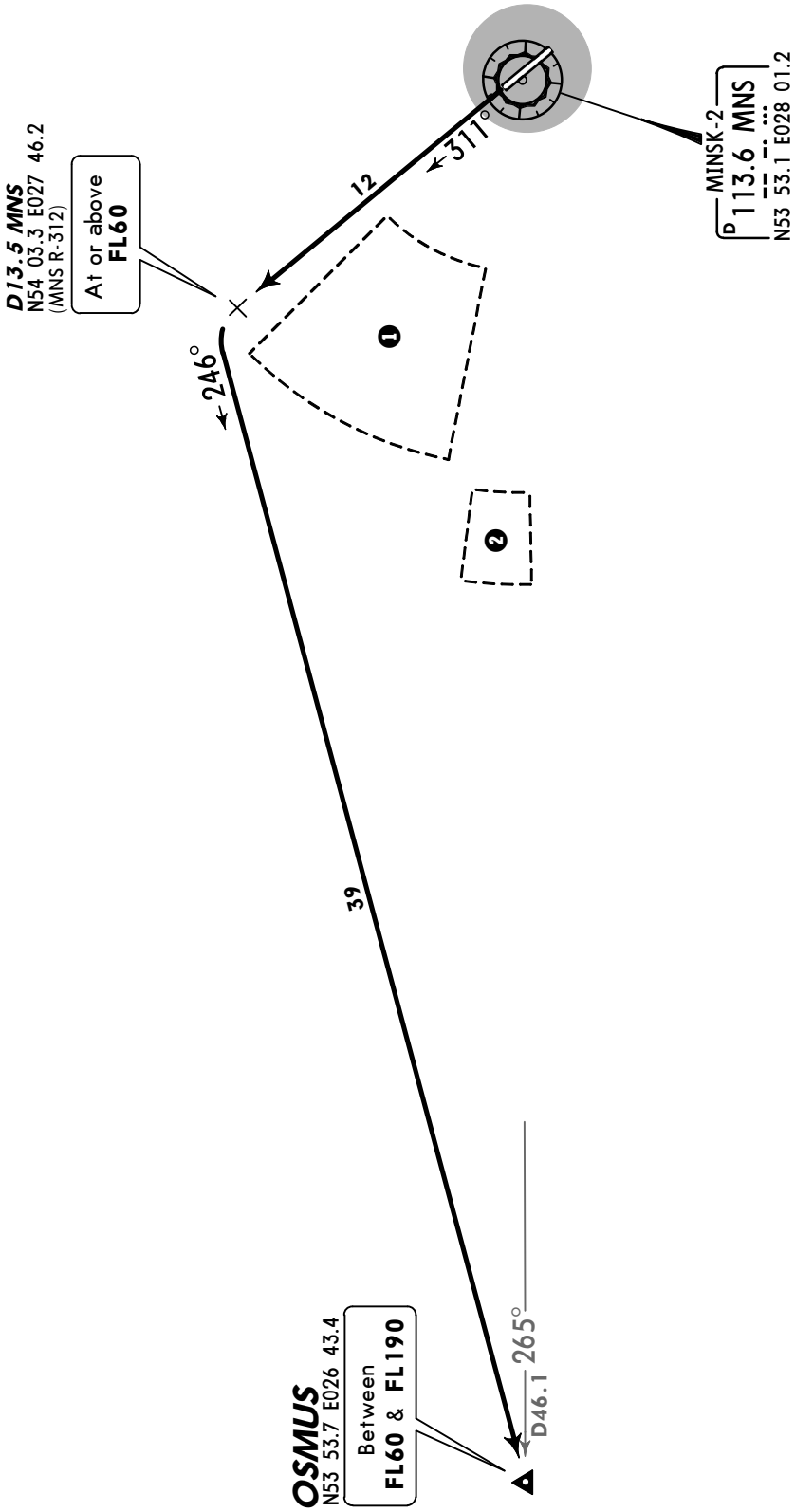

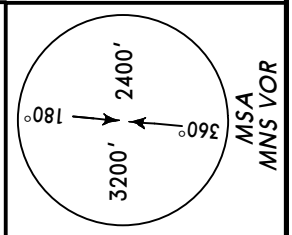

ALT/HEIGHT CONVERSION
(QFE)

QNH		
3070′	***(2400′ - 730m)***	
3630′	***(2960′ - 900m)***	

❶ Flights in sector R-274 - R-308 D6.5 - D13.1 MNS below 3070′ ***(2400′)*** are prohibited.
❷ Flights in sector R-260 - R-270 D14.7 - D17.4 MNS below **FL180** are prohibited.

N
NOT TO SCALE

© JEPPESEN, 2009, 2010. ALL RIGHTS RESERVED.

ATIS	MINSK-2 Ground	Tower
128.85 (Russian 135.85)	129.95	118.3

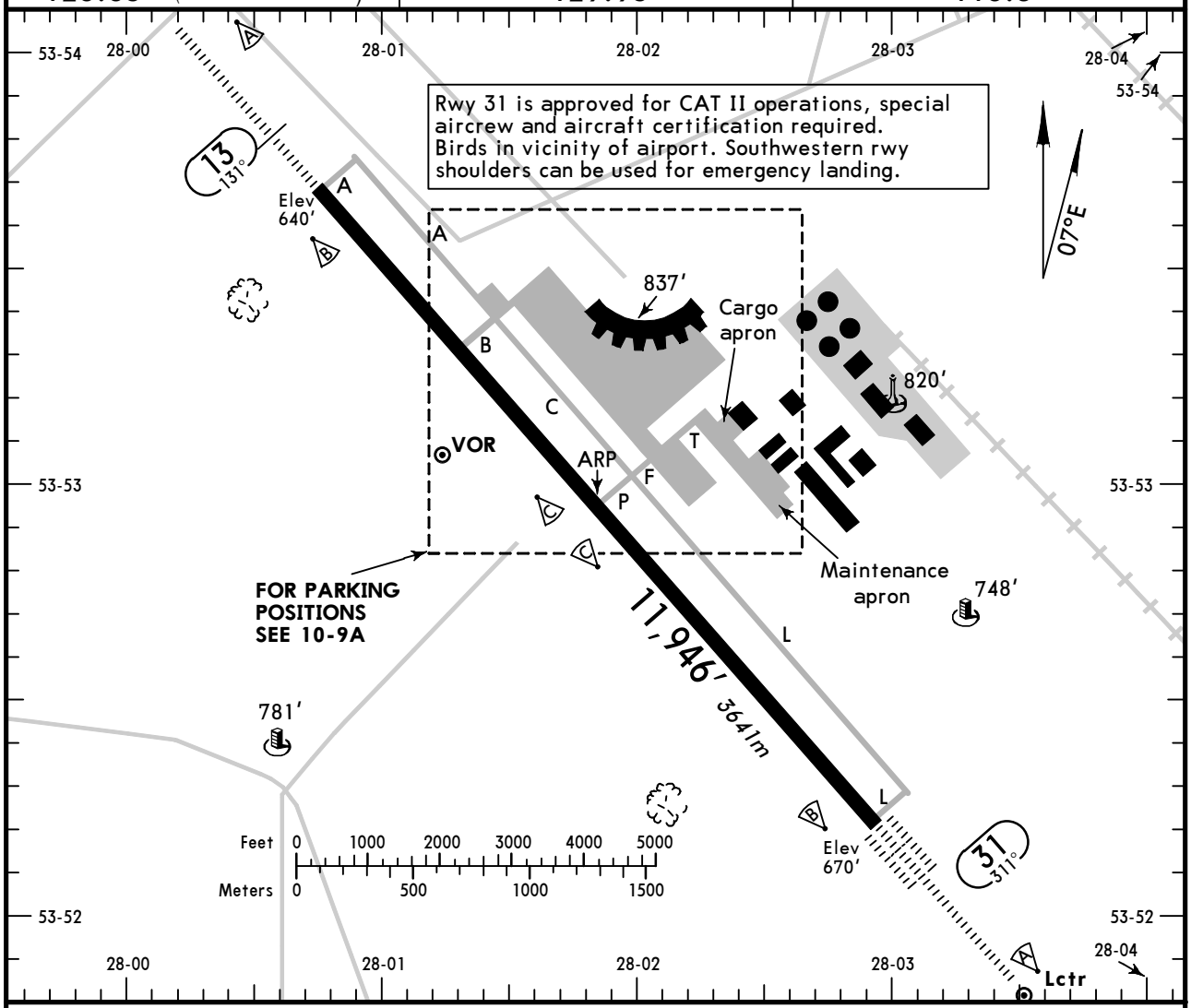

ADDITIONAL RUNWAY INFORMATION

RWY		USABLE LENGTHS — LANDING BEYOND — Threshold	Glide Slope	TAKE-OFF	WIDTH
13	HIRL *(60m)* CL *(15m)* HIALS PAPI-L ❶ RVR		10,974′ *3345m*		197′ *60m*
31	HIRL *(60m)* CL *(15m)* HIALS-II TDZ PAPI-L ❶ RVR		10,852′ *3308m*		

❶ angle 3.0°.

TAKE-OFF

AIR CARRIER (JAA)
All Rwys

LVP must be in force

	RL & CL	RCLM (DAY only) or RL	RCLM (DAY only) or RL
A	*200m (150m)*	*250m*	*400m*
B			
C			
D	*250m (200m)*	*300m*	

CHANGES: ARP Coordinates. Rwy bearings.Rwy elev.

© JEPPESEN, 1998, 2010. ALL RIGHTS RESERVED.

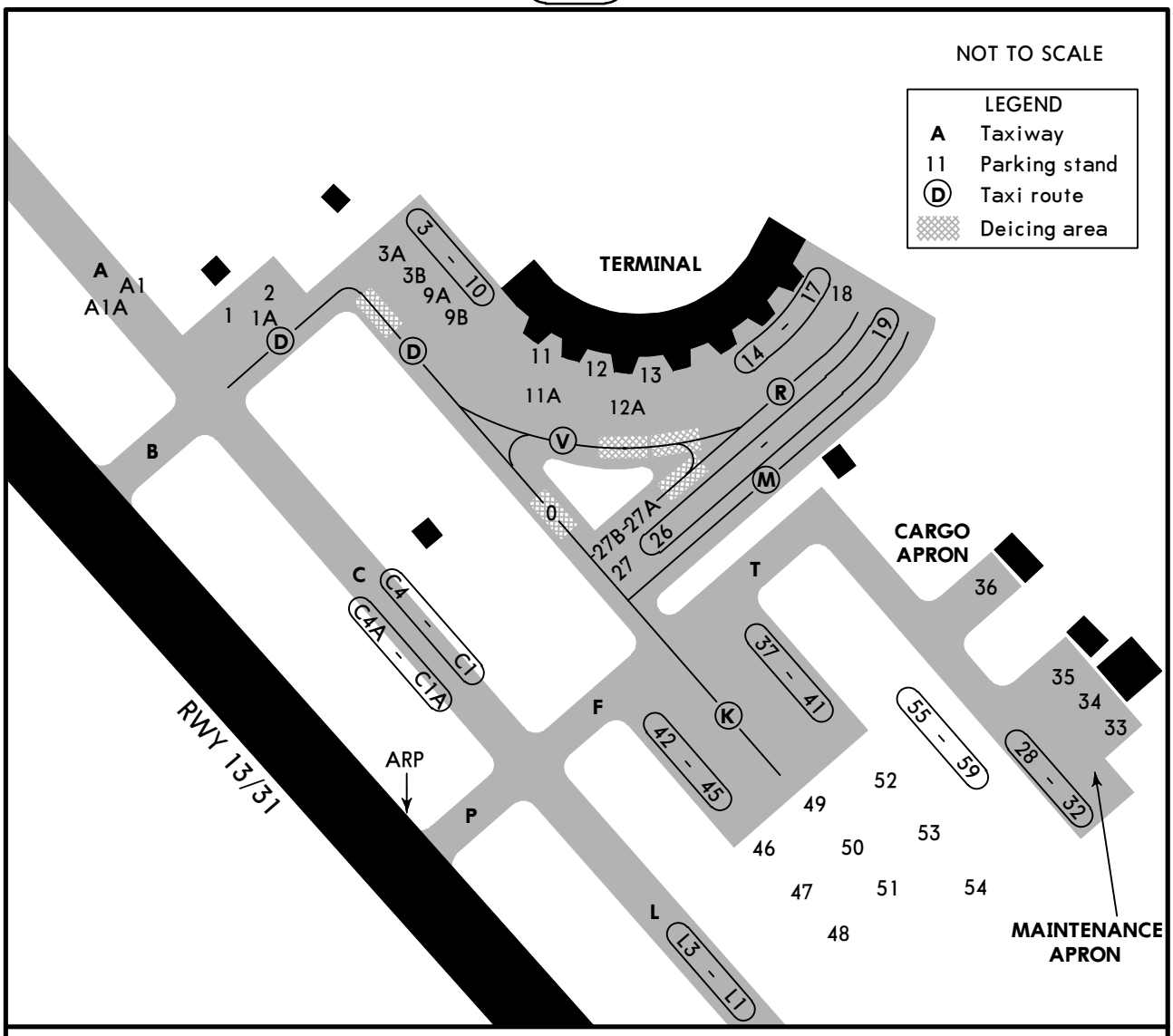

Taxiing and towing are prohibited without controller's clearance.

INS COORDINATES

STAND No.	COORDINATES	STAND No.	COORDINATES
1, 2	N53 53.4 E028 01.5	25	N53 53.3 E028 02.1
3	N53 53.5 E028 01.7	26	N53 53.2 E028 02.1
3A, 3B	N53 53.5 E028 01.6	27	N53 53.2 E028 02.0
4, 5	N53 53.5 E028 01.7	36	N53 53.0 E028 02.6
6	N53 53.4 E028 01.7	37 thru 39	N53 53.1 E028 02.2
7 thru 9	N53 53.4 E028 01.8	40	N53 53.0 E028 02.2
10	N53 53.4 E028 01.9	41	N53 53.0 E028 02.3
11 thru 12A	N53 53.3 E028 01.9	42	N53 53.1 E028 02.1
13, 14	N53 53.3 E028 02.0	43 thru 45	N53 53.0 E028 02.2
15	N53 53.3 E028 02.1		
16	N53 53.4 E028 02.1		
17, 18	N53 53.4 E028 02.2		
19	N53 53.4 E028 02.3		
20	N53 53.3 E028 02.3		
21 thru 24	N53 53.3 E028 02.2		

CHANGES: Parking stands.

© JEPPESEN, 1998, 2010. ALL RIGHTS RESERVED.

STRAIGHT-IN RWY		A	B	C	D
13	ILS	**840**′(200′)	**840**′(200′)	**840**′(200′)	**840**′(200′)
	FULL	**R550m**	**R550m**	**R550m**	**R550m**
	Limited	R750m	R750m	R750m	R750m
	ALS out	R1200m	R1200m	R1200m	R1200m
	LOC	NOT AUTH	NOT AUTH	NOT AUTH	NOT AUTH
	VOR ❶	**1300**′(660′)	**1300**′(660′)	**1630**′(990′)	**1630**′(990′)
		R1500m	**R1500m**	**C2400m**	**C2400m**
	ALS out	R1500m	R1500m	C2400m	C2400m
	NDB ❶	**990**′(350′)	**990**′(350′)	**990**′(350′)	**990**′(350′)
		R900m	**R900m**	**R900m**	**R900m**
	ALS out	R1500m	R1500m	R1600m	R1600m
31	CAT 2 ILS	**770**′(100′)	**770**′(100′)	**770**′(100′)	**770**′(100′)
		RA97′R350m	**RA97′R350m**	**RA97′R350m**	**RA97′R350m**
	ILS	**870**′(200′)	**870**′(200′)	**870**′(200′)	**870**′(200′)
	FULL	**R550m**	**R550m**	**R550m**	**R550m**
	Limited	R750m	R750m	R750m	R750m
	ALS out	R1200m	R1200m	R1200m	R1200m
	LOC	NOT AUTH	NOT AUTH	NOT AUTH	NOT AUTH
	VOR ❶	**1330**′(660′)	**1330**′(660′)	**1660**′(990′)	**1660**′(990′)
		R1500m	**R1500m**	**C2400m**	**C2400m**
	ALS out	R1500m	R1500m	C2400m	C2400m
	NDB ❶	**1010**′(340′)	**1010**′(340′)	**1010**′(340′)	**1010**′(340′)
		R800m	**R800m**	**R800m**	**R800m**
	ALS out	R1500m	R1500m	R1500m	R1500m

❶ Continuous Descent Final Approach

CIRCLE-TO-LAND ❷	100 KT	135 KT	180 KT	205 KT
	1530′(860′)	**1530**′(860′)	**1530**′(860′) ❸	**1530**′(860′) ❸
	ceil1020′ V3000m	ceil1020′ V3000m	ceil1190′ V3000m	ceil1190′ V4000m

❷NIGHT not authorized.
❸wide bodied acft: 1660′(990′), ceil 1320′-V5000m.

TAKE-OFF RWY 13, 31

	Approved Operators HIRL, CL & mult. RVR req	LVP must be in Force: RL, CL & mult. RVR req	LVP must be in Force: RL & CL	LVP must be in Force: RCLM (DAY only) or RL	RCLM (DAY only) or RL	NIL (DAY only)
A, B, C	125m	150m	200m	250m	400m	500m
D	150m	200m	250m	300m		

© JEPPESEN, 2010. ALL RIGHTS RESERVED.

STRAIGHT-IN RWY		A	B	C	D
13	ILS	**840′**(200′)	**840′**(200′)	**840′**(200′)	**840′**(200′)
		R550m	**R550m**	**R550m**	**R550m**
	ALS out	R1000m	R1000m	R1000m	R1000m
	LOC	NOT AUTHORIZED			
	VOR	**1300′**(660′)	**1300′**(660′)	**1630′**(990′)	**1630′**(990′)
		R1200m	**R1400m**	**R1400m**	**R1800m**
	ALS out	R1500m	R1500m	R2000m	R2000m
	NDB	**990′**(350′)	**990′**(350′)	**990′**(350′)	**990′**(350′)
		R900m	**R1000m**	**R1000m**	**R1400m**
	ALS out	R1500m	R1500m	R1800m	R2000m
31	CAT 2 ILS	**770′**(100′)	**770′**(100′)	**770′**(100′)	**770′**(100′)
		RA97′- R350m	**RA97′- R350m**	**RA97′- R350m**	**RA97′- R350m**
	ILS	**870′**(200′)	**870′**(200′)	**870′**(200′)	**870′**(200′)
		R550m	**R550m**	**R550m**	**R550m**
	ALS out	R1000m	R1000m	R1000m	R1000m
	LOC	NOT AUTHORIZED			
	VOR	**1330′**(660′)	**1330′**(660′)	**1660′**(990′)	**1660′**(990′)
		R1200m	**R1400m**	**R1400m**	**R1800m**
	ALS out	R1500m	R1500m	R2000m	R2000m
	NDB	**1010′**(340′)	**1010′**(340′)	**1010′**(340′)	**1010′**(340′)
		R900m	**R1000m**	**R1000m**	**R1400m**
	ALS out	R1500m	R1500m	R1800m	R2000m

CIRCLE-TO-LAND	100 KT	135 KT	180 KT	205 KT
NIGHT not authorized	**1530′**(860′)	**1530′**(860′)	**1530′**(860′) ❶	**1530′**(860′) ❶
	CEIL1020′-V3000m	CEIL1020′-V3000m	CEIL1190′-V3000m	CEIL1190′-V4000m

❶ Wide bodied acft: **1660′**(990′), ceil 1320′-V5000m.

TAKE-OFF RWY 13, 31

	Approved Operators HIRL, CL & mult. RVR req	LVP must be in Force RL, CL & mult. RVR req	RL & CL	RCLM (DAY only) or RL	RCLM (DAY only) or RL	NIL (DAY only)
A, B, C	*125m*	*150m*	*200m*	*250m*	*400m*	*500m*
D	*150m*	*200m*	*250m*	*300m*		

© JEPPESEN, 2005, 2010. ALL RIGHTS RESERVED.

BRIEFING STRIP TM

ATIS	MINSK Approach (Radar/R)	*MINSK Radar	MINSK-2 Tower	Ground
128.85 (Russian 135.85)	125.9	125.25	118.3	129.95

LOC	Final Apch Crs	GS LOM	ILS DA(H)	Apt Elev 670'
IVX *108.9	131°	1378'(738')	840'(200')	RWY 640'

MISSED APCH: Climb on 131° to 1300'(660') or above. Not before D1.9 MNS turn LEFT (MAX 225 KT) to VOR climbing to 2610'(1970'), then as directed.

Alt Set: MM (hPa on req) QNH on req (QFE) Trans level: FL 60 ❶ Trans alt: 3630'(2990')

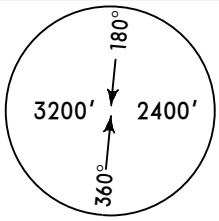

MSA
MNS VOR

❶ FL 50, if pressure is 733mm (977.3 hPa) or above.

ALT/HEIGHT CONVERSION

QNH	(QFE)
3630'	(2990' - 900m)
2610'	(1970' - 600m)
1300'	(660' - 200m)

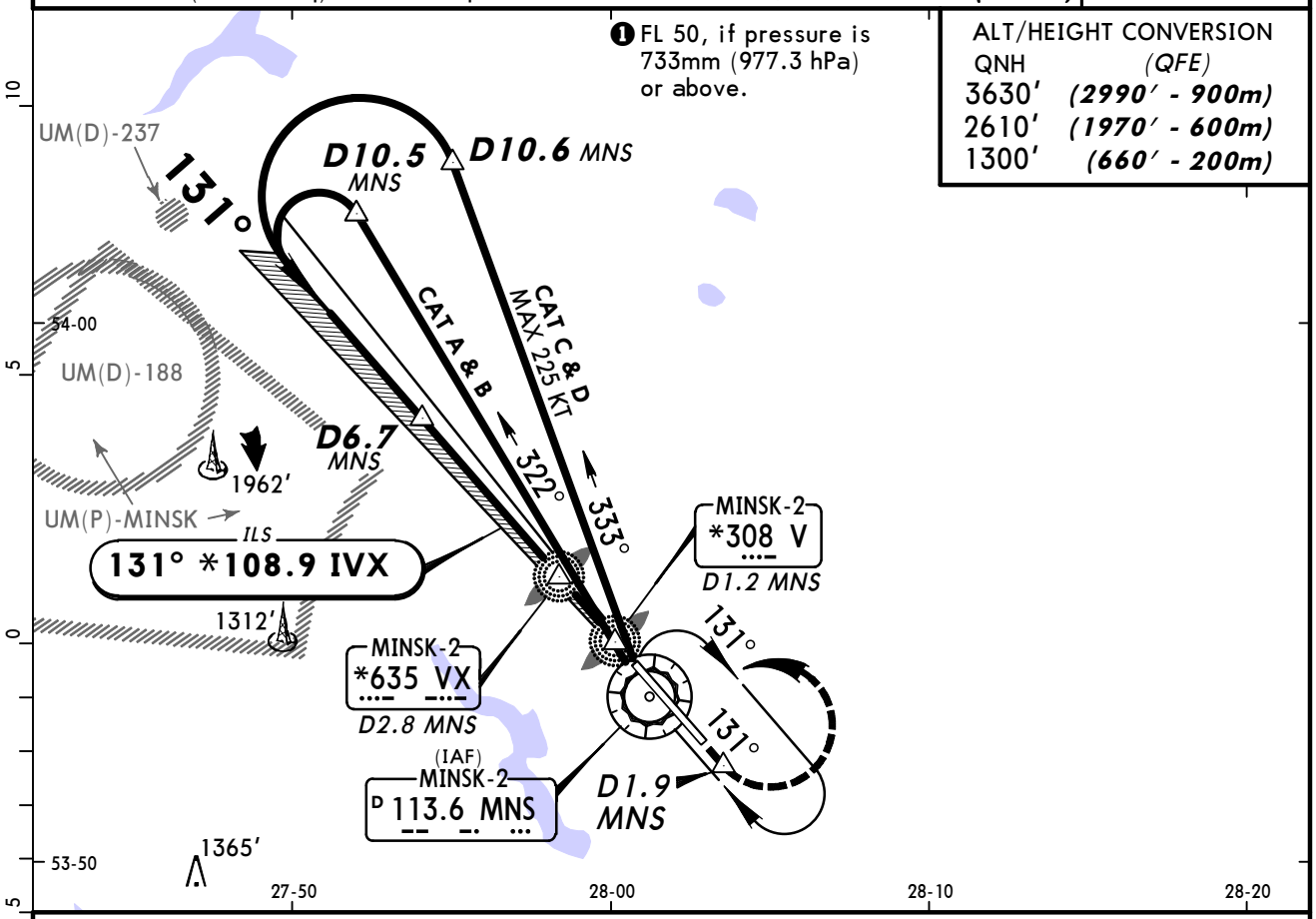

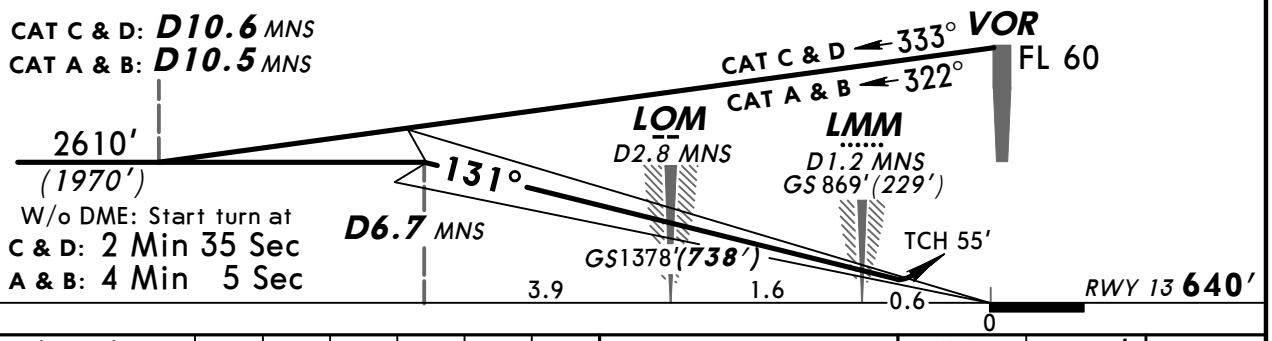

W/o DME: Start turn at
C & D: 2 Min 35 Sec
A & B: 4 Min 5 Sec

Gnd speed-Kts	70	90	100	120	140	160
ILS GS 3.00°	377	484	538	646	753	861

HIALS
PAPI

1300' (660') or above on 131°

PANS OPS

STRAIGHT-IN LANDING RWY 13

	ILS DA(H) 840'(200') FULL	ILS DA(H) 840'(200') ALS out	LOC (GS out)
A	RVR 720m VIS 800m	1200m	NOT AUTHORIZED
B			
C			
D			

CEILING REQUIRED — CIRCLE-TO-LAND

NIGHT not authorized

Max Kts	MDA(H)	CEIL-VIS
100	1530'(860')	1020'- 3000m
135		
180	1530'(860') ❶	1190'- 3000m
205	1530'(860') ❶	1190'- 4000m

❶ Wide bodied acft: MDA(H) 1660'(990'), CEIL-VIS 1320'- 5.0 km.

CHANGES: Rwy elev. Bearings.

© JEPPESEN, 1998, 2010. ALL RIGHTS RESERVED.

BRIEFING STRIP TM

ATIS	MINSK Approach (Radar/R)	*MINSK Radar	MINSK-2 Tower	Ground
128.85 (Russian 135.85)	125.9	125.25	118.3	129.95

LOC	Final Apch Crs	GS LOM	ILS DA(H)	Apt Elev 670'
IVX *108.9	131°	1378' (738')	840' (200')	RWY 640'

MISSED APCH: Climb on 131° to 1300' (660') or above. Not before D1.9 MNS turn LEFT (MAX 225 KT) to VX NDB climbing to 2610' (1970'), then as directed.

Alt Set: MM (hPa on req) QNH on req (QFE) Trans level: FL 60 ❶ Trans alt: 3630' (2990')

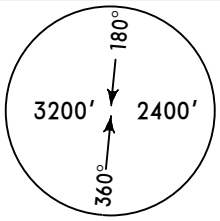

MSA
MNS VOR

❶ FL 50, if pressure is 733mm (977.3 hPa) or above.

ALT/HEIGHT CONVERSION

QNH	(QFE)
3630'	(2990' - 900m)
2610'	(1970' - 600m)
1300'	(660' - 200m)

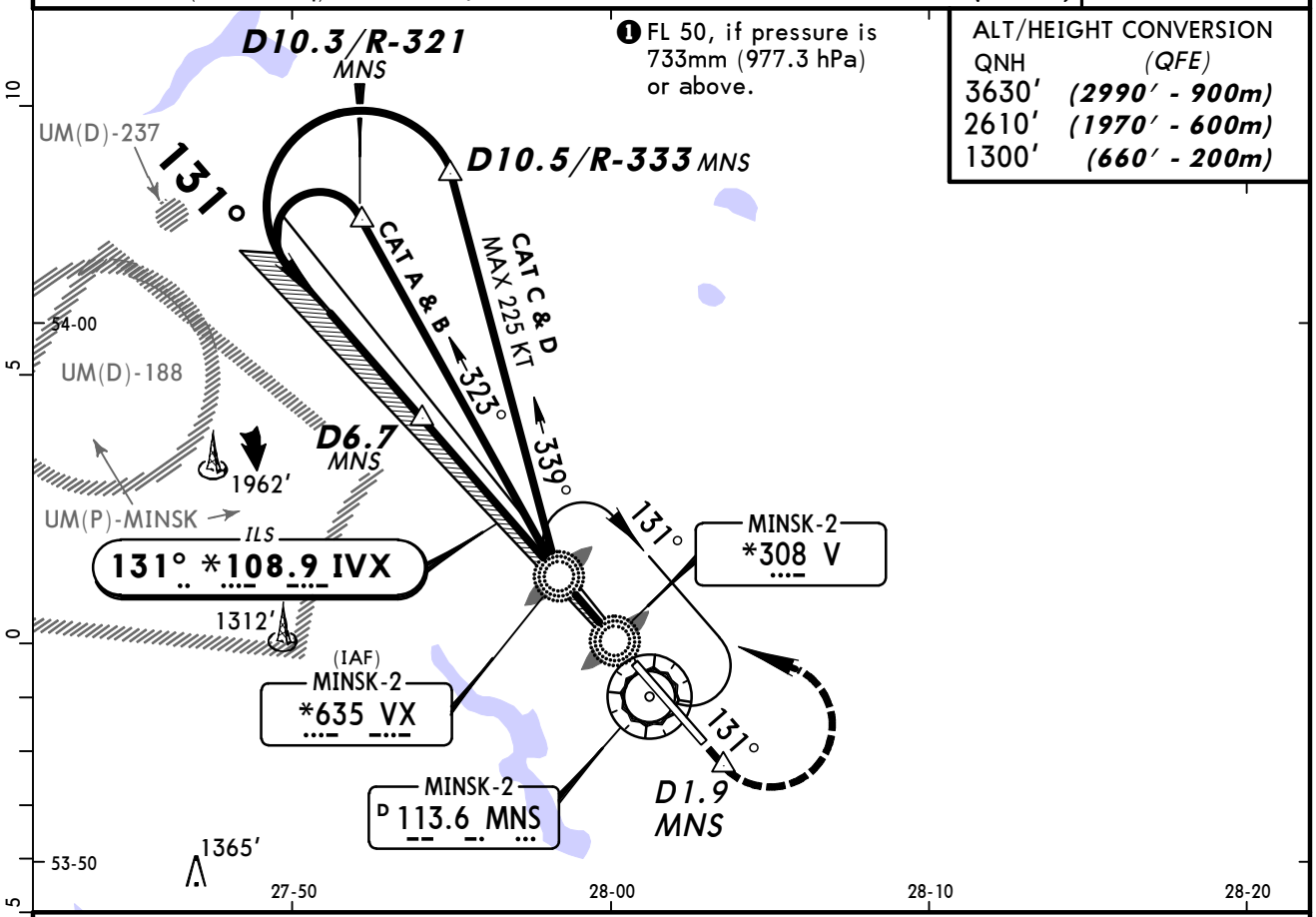

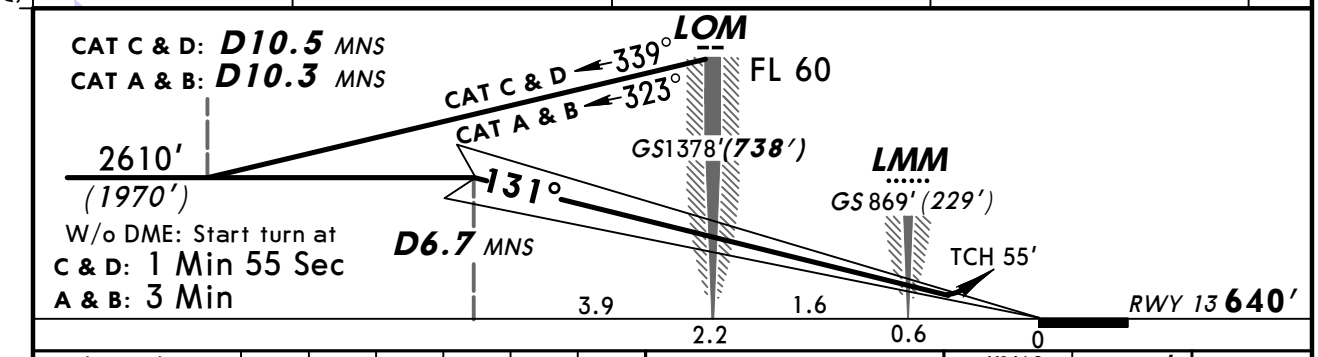

Gnd speed-Kts		70	90	100	120	140	160
ILS GS	3.00°	377	484	538	646	753	861

HIALS
PAPI
1300' (660') on or above
131°

PANS OPS

STRAIGHT-IN LANDING RWY 13

	ILS DA(H) 840' (200') FULL	ILS DA(H) 840' (200') ALS out	LOC (GS out)
A	RVR 720m VIS 800m	1200m	NOT AUTHORIZED
B			
C			
D			

CEILING REQUIRED CIRCLE-TO-LAND

NIGHT not authorized

Max Kts.	MDA(H)	CEIL-VIS
100	1530' (860')	1020' - 3000m
135		
180	1530' (860') ❶	1190' - 3000m
205	1530' (860') ❶	1190' - 4000m

❶ Wide bodied acft: MDA(H) 1660' (990'), CEIL-VIS 1320' - 5.0 km.

CHANGES: Rwy elev. Bearings.

© JEPPESEN, 1998, 2010. ALL RIGHTS RESERVED.

BRIEFING STRIP ™

ATIS	MINSK Approach (Radar/R)	*MINSK Radar	MINSK-2 Tower	Ground
128.85 (Russian 135.85)	125.9	125.25	118.3	129.95

LOC IGH	Final Apch Crs	GS LOM	ILS DA(H)	Apt Elev 670'
*109.7	311°	1408' (738')	870' (200')	RWY 670'

MISSED APCH: Climb on 311° to 1330' (660') or above. Not before D1.2 MNS turn RIGHT (MAX 225 KT) to VOR climbing to 2640' (1970'), then as directed.

Alt Set: MM (hPa on req) QNH on req (QFE) Trans level: FL 60 ❶ Trans alt: 3630' (2960')

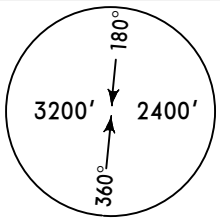

MSA
MNS VOR

ALT/HEIGHT CONVERSION

QNH	(QFE)
3630'	(2960' - 900m)
2640'	(1970' - 600m)
1330'	(660' - 200m)

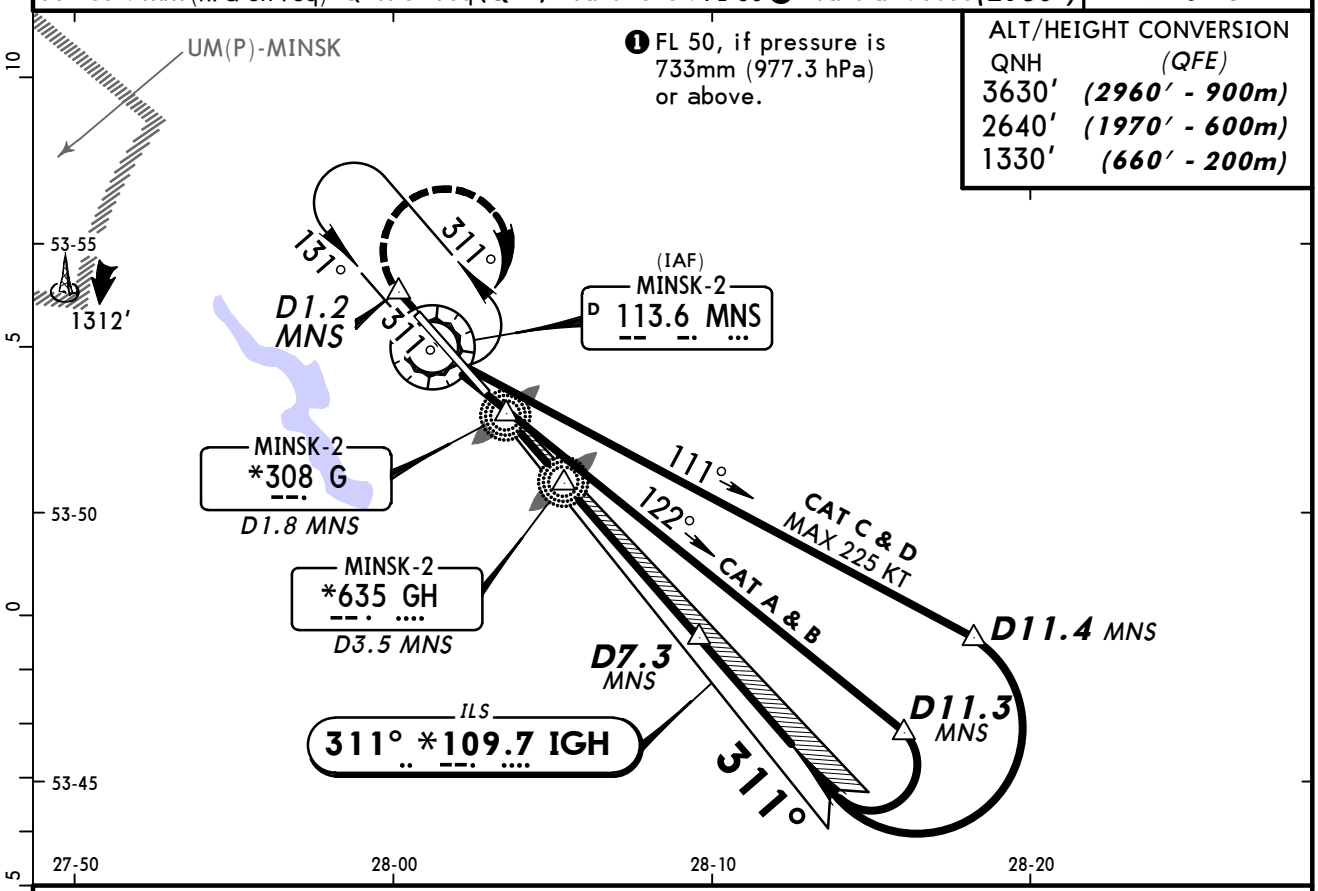

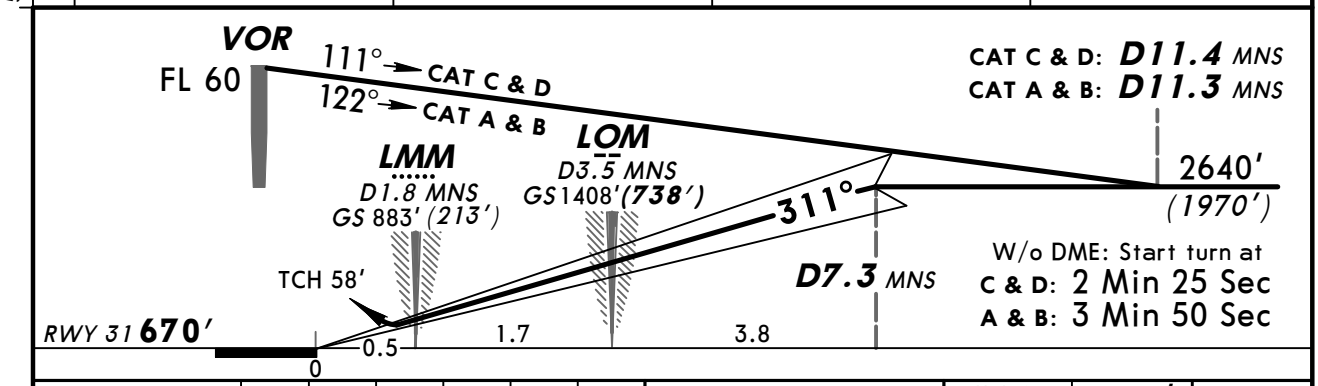

Gnd speed-Kts		70	90	100	120	140	160
ILS GS	3.00°	377	484	538	646	753	861

HIALS-II
PAPI
1330' (660') or above on 311°

PANS OPS

STRAIGHT-IN LANDING RWY 31

	ILS DA(H) 870' (200') FULL	TDZ or CL out	ALS out	LOC (GS out)
A	RVR 550m VIS 800m	RVR 720m VIS 800m	1200m	NOT AUTHORIZED
B				
C				
D				

CEILING REQUIRED CIRCLE-TO-LAND

NIGHT not authorized

Max Kts	MDA(H)	CEIL-VIS
100	1530' (860')	1020' - 3000m
135		
180	1530' (860') ❶	1190' - 3000m
205	1530' (860') ❶	1190' - 4000m

❶ Wide bodied acft: MDA(H) 1660' (990'), CEIL-VIS 1320' - 5.0 km.

CHANGES: Bearings.

© JEPPESEN, 1998, 2010. ALL RIGHTS RESERVED.

MINSK, BELARUS
CAT II ILS-Charlie Rwy 31

BRIEFING STRIP ™

ATIS	MINSK Approach (Radar/R)	*MINSK Radar	MINSK-2 Tower	Ground
128.85 (Russian 135.85)	125.9	125.25	118.3	129.95

LOC	Final Apch Crs	GS	CAT II ILS	Apt Elev 670'
IGH *109.7	311°	LOM 1408' (738')	RA 97' DA(H) 770' (100')	RWY 670'

MISSED APCH: Climb on 311° to 1330' (660') or above. Not before D1.2 MNS turn RIGHT (MAX 225 KT) to VOR climbing to 2640' (1970'), then as directed.

Alt Set: MM (hPa on req) QNH on req (QFE) Trans level: FL 60❶ Trans alt: 3630'(2960')
Special Aircrew & Acft Certification Required.

MSA MNS VOR: 180°, 3200', 2400', 360°

❶ FL 50, if pressure is 733mm (977.3 hPa) or above.

ALT/HEIGHT CONVERSION

QNH	(QFE)
3630'	(2960' - 900m)
2640'	(1970' - 600m)
1330'	(660' - 200m)

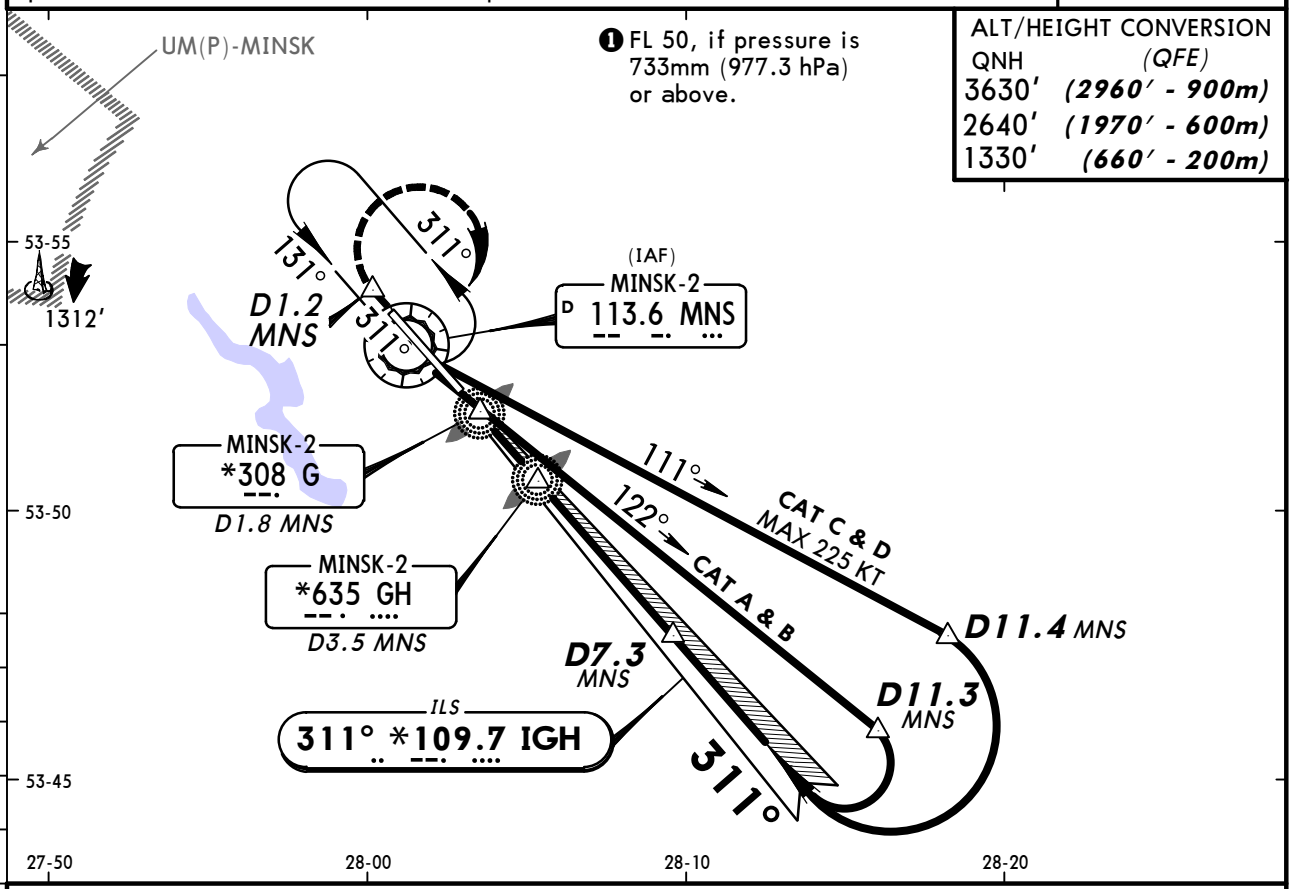

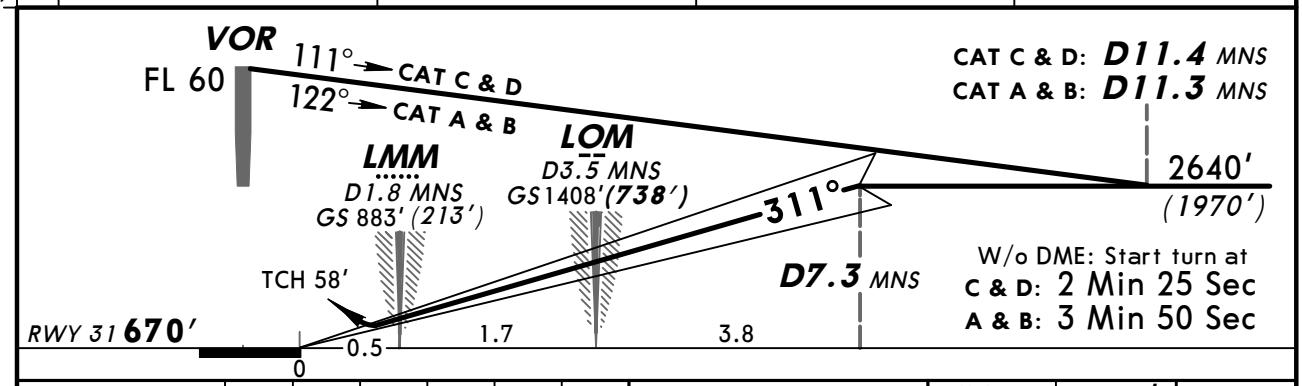

Gnd speed-Kts	70	90	100	120	140	160
GS 3.00°	377	484	538	646	753	861

HIALS-II
PAPI
1330' (660') on or above
311°

STRAIGHT-IN LANDING RWY 31
CAT II ILS
ABCD
RA 97'
DA(H) 770' (100')

PANS OPS

RVR 350m

CHANGES: Bearings.

© JEPPESEN, 1998, 2010. ALL RIGHTS RESERVED.

BRIEFING STRIP ™

ATIS	MINSK Approach (Radar/R)	*MINSK Radar	MINSK-2 Tower	Ground
128.85 (Russian 135.85)	125.9	125.25	118.3	129.95

LOC IGH	Final Apch Crs	GS LOM	ILS DA(H)	Apt Elev 670'
*109.7	311°	1408' (738')	870' (200')	RWY 670'

MISSED APCH: Climb on 311° to 1330' (660') or above. Not before D1.2 MNS turn RIGHT (MAX 225 KT) to GH NDB climbing to 2640' (1970'), then as directed.

Alt Set: MM (hPa on req) QNH on req (QFE) Trans level: FL 60 ❶ Trans alt: 3630' (2960')

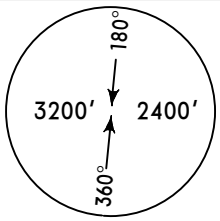

MSA
MNS VOR

❶ FL 50, if pressure is 733mm (977.3 hPa) or above.

ALT/HEIGHT CONVERSION

QNH	(QFE)
3630'	(2960' - 900m)
2640'	(1970' - 600m)
1330'	(660' - 200m)

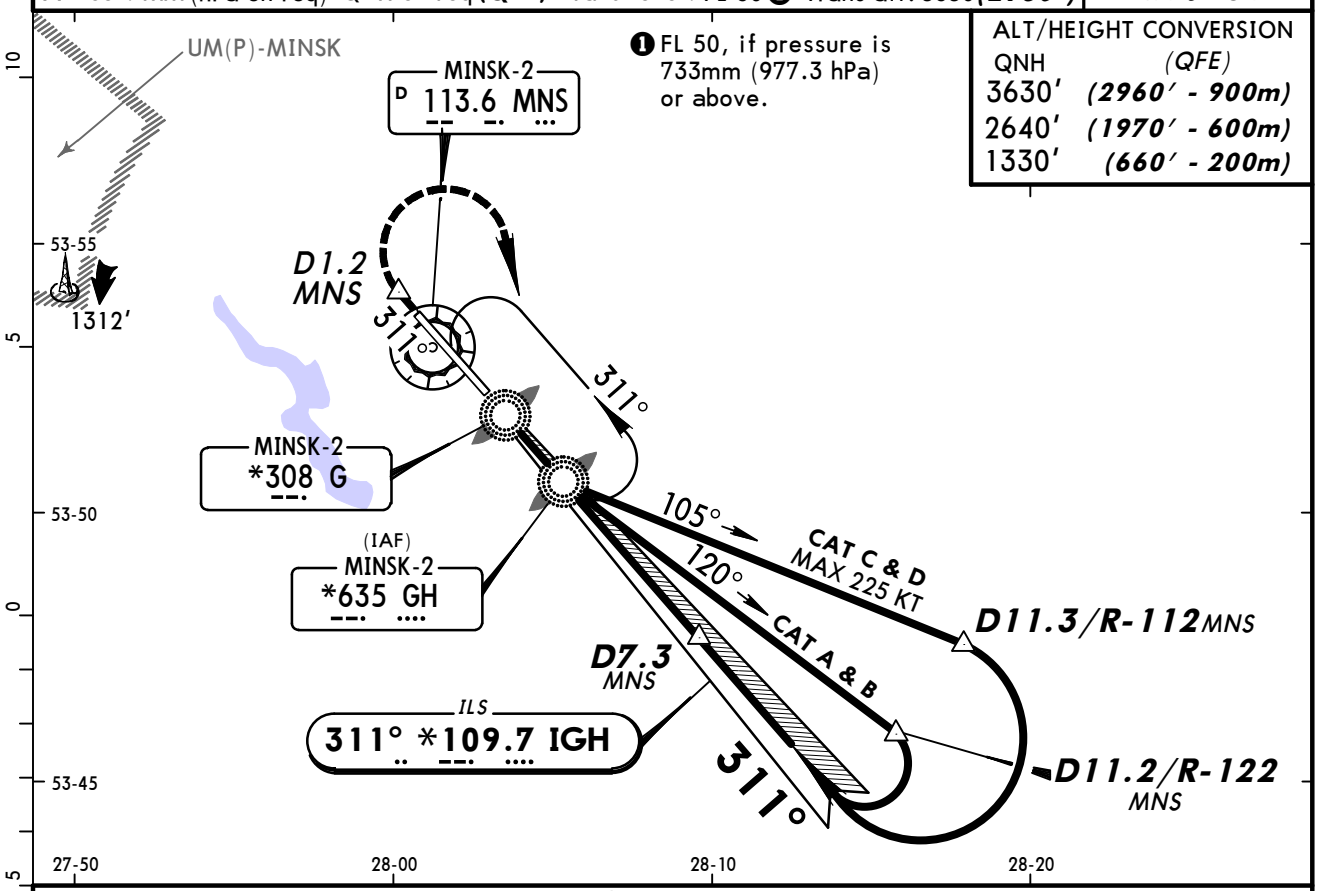

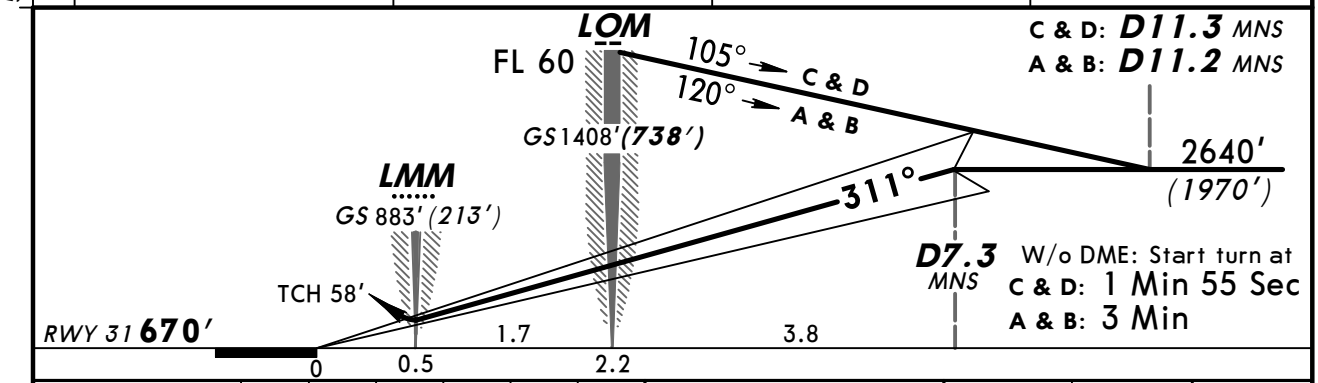

Gnd speed-Kts	70	90	100	120	140	160
ILS GS 3.00°	377	484	538	646	753	861

HIALS-II
PAPI
1330' (660') or above on 311°

PANS OPS

STRAIGHT-IN LANDING RWY 31

	ILS DA(H) 870' (200') FULL	TDZ or CL out	ALS out	LOC (GS out)
A	RVR 550m VIS 800m	RVR 720m VIS 800m	1200m	NOT AUTHORIZED
B				
C				
D				

CEILING REQUIRED CIRCLE-TO-LAND

NIGHT not authorized

Max Kts	MDA(H)	CEIL-VIS
100	1530' (860')	1020' - 3000m
135		
180	1530' (860') ❶	1190' - 3000m
205	1530' (860') ❶	1190' - 4000m

❶ Wide bodied acft: MDA(H) 1660' (990'), CEIL-VIS 1320' - 5.0 km.

CHANGES: Bearings.

© JEPPESEN, 1998, 2010. ALL RIGHTS RESERVED.

MINSK, BELARUS
CAT II ILS-Delta Rwy 31

BRIEFING STRIP ™

ATIS	MINSK Approach (Radar/R)	*MINSK Radar	MINSK-2 Tower	Ground
128.85 (Russian 135.85)	125.9	125.25	118.3	129.95

LOC	Final Apch Crs	GS	CAT II ILS	Apt Elev 670′
IGH *109.7	311°	LOM 1408′ (738′)	RA 97′ DA(H) 770′ (100′)	RWY 670′

MISSED APCH: Climb on 311° to 1330′ (660′) or above. Not before D1.2 MNS turn RIGHT (MAX 225 KT) to GH NDB climbing to 2640′ (1970′), then as directed.

Alt Set: MM (hPa on req) QNH on req (QFE) Trans level: FL 60 ❶ Trans alt: 3630′ (2960′)
Special Aircrew & Acft Certification Required.

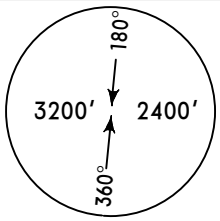

MSA
MNS VOR

❶ FL 50, if pressure is 733mm (977.3 hPa) or above.

ALT/HEIGHT CONVERSION

QNH	(QFE)
3630′	(2960′ - 900m)
2640′	(1970′ - 600m)
1330′	(660′ - 200m)

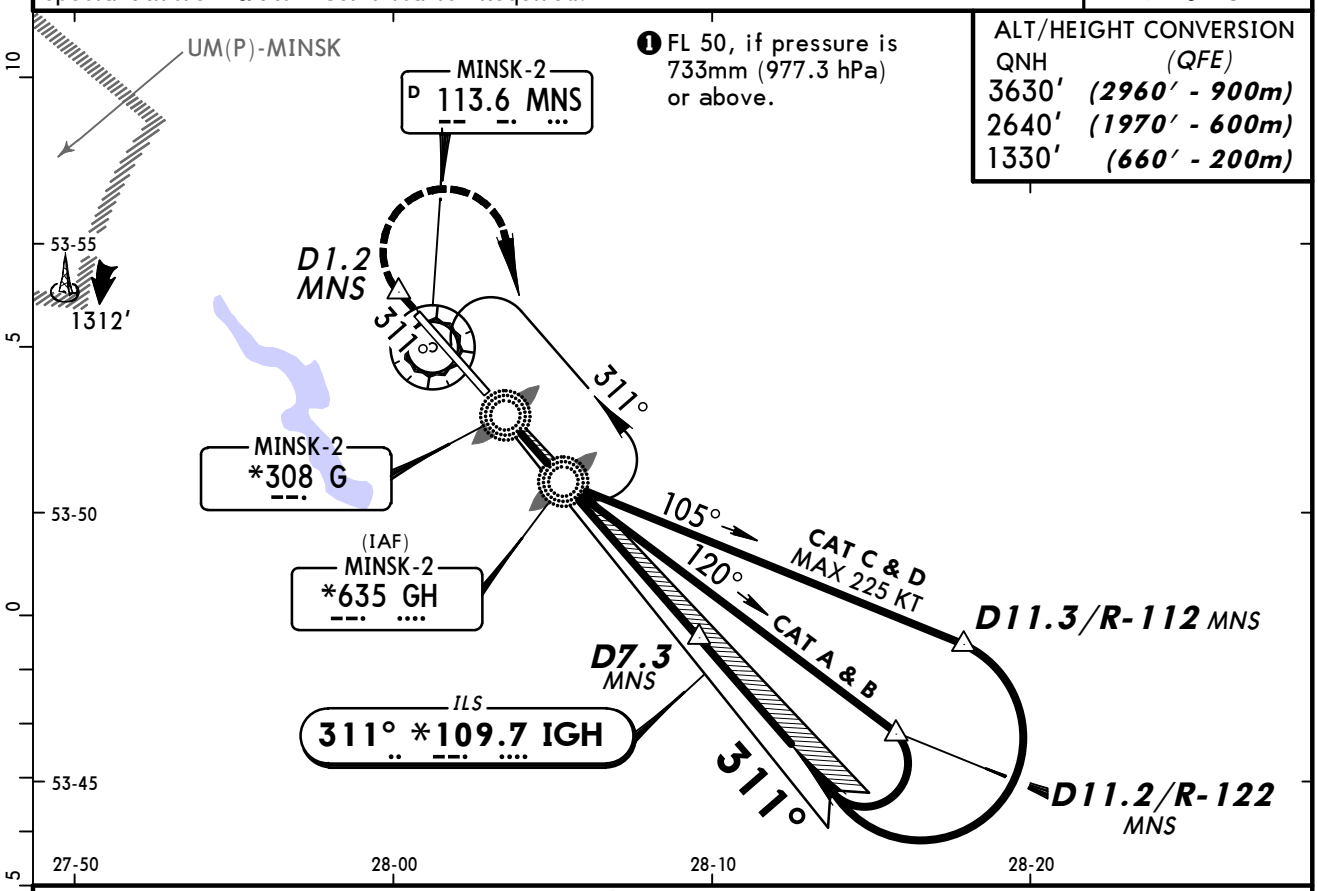

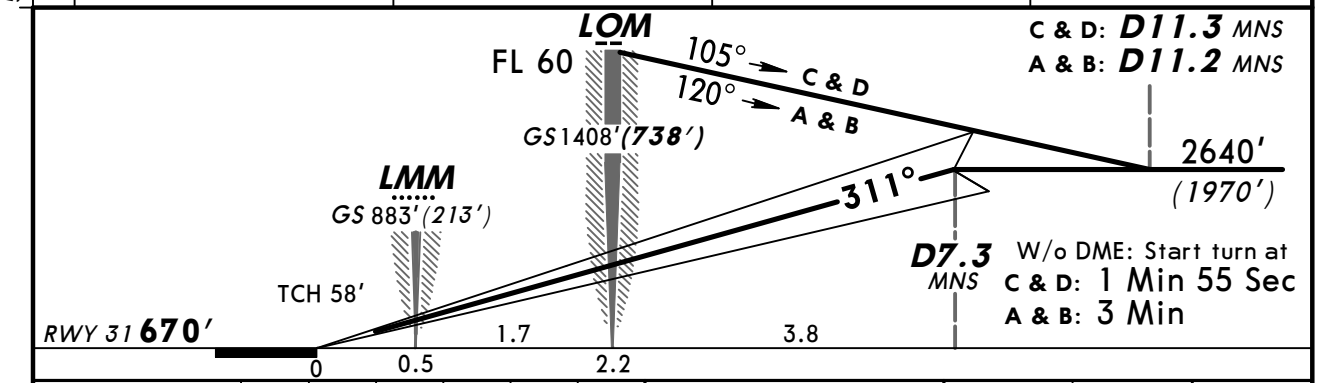

Gnd speed-Kts	70	90	100	120	140	160
GS 3.00°	377	484	538	646	753	861

HIALS-II
PAPI
1330′ (660′) or above on 311°

STRAIGHT-IN LANDING RWY 31
CAT II ILS
ABCD
RA 97′
DA(H) 770′ (100′)

PANS OPS

RVR 350m

CHANGES: Bearings.

© JEPPESEN, 1998, 2010. ALL RIGHTS RESERVED.

BRIEFING STRIP ™

ATIS	MINSK Approach (Radar/R)	*MINSK Radar	MINSK-2 Tower	Ground
128.85 (Russian 135.85)	125.9	125.25	118.3	129.95

VOR	Final Apch Crs	Minimum Alt	MDA(H)	Apt Elev 670′
MNS 113.6	136°	D6.7 2610′(1970′)	Refer to Minimums	RWY 640′

MISSED APCH: Climb on 131° to 2610′(1970′)not above. Not before D1.9 after crossing rwy, turn LEFT (MAX 225 KT) to VOR, then as directed.

Alt Set: MM (hPa on req) QNH on req (QFE) Trans level: FL 50❶ Trans alt: 3630′(2990′)
Approach slope descent shall be commenced after passing D6.7.

MSA MNS VOR: 180° 3200′ 2400′ 360°

❶ FL 60, if pressure is less than 733mm (977.3 hPa).

ALT/HEIGHT CONVERSION

QNH	(QFE)
3630′	(2990′ - 900m)
2610′	(1970′ - 600m)
1630′	(990′ - 300m)

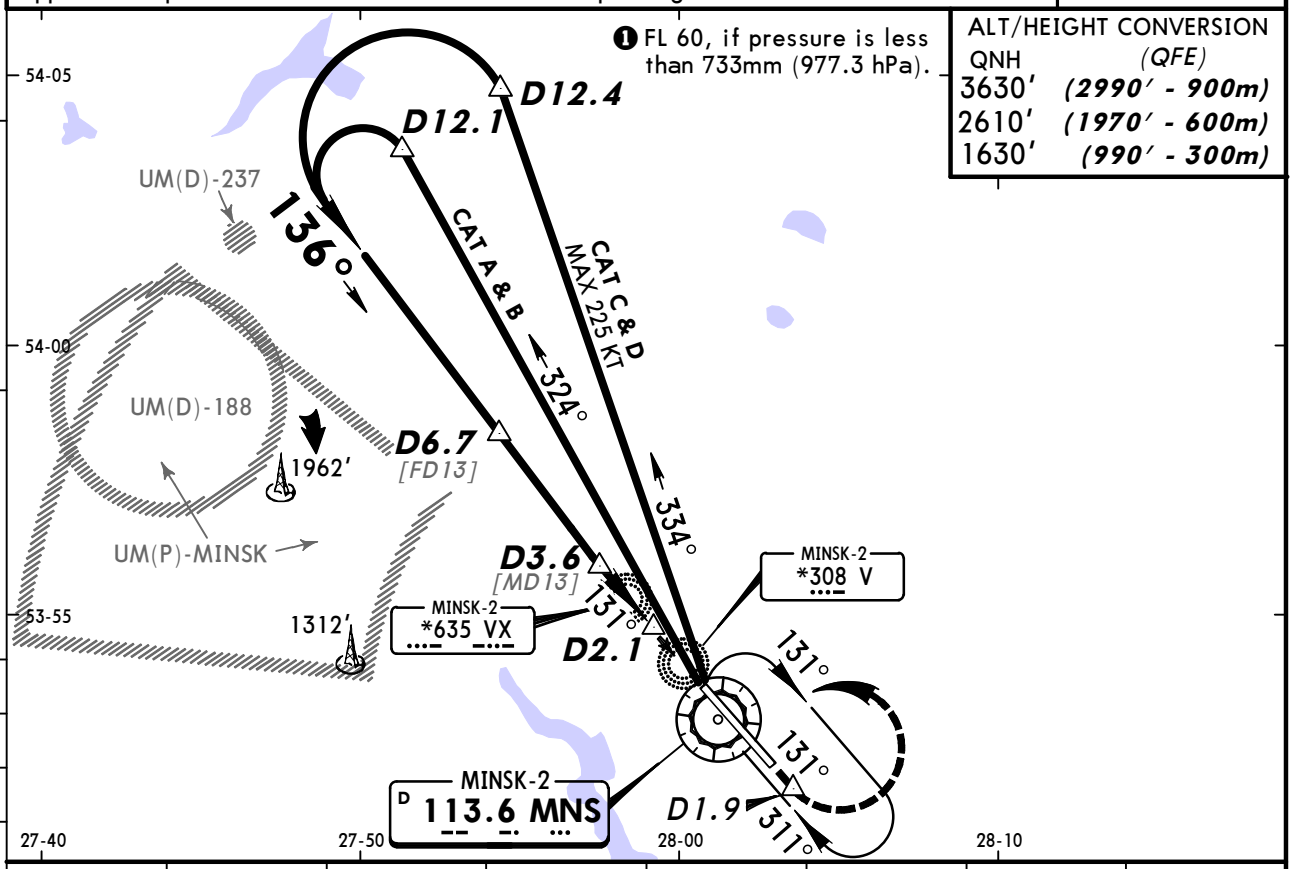

MNS DME	6.6	6.1	5.6	5.0	4.5	3.9	3.4
ALTITUDE	2600′(1960′)	2420′(1780′)	2250′(1610′)	2070′(1430′)	1910′(1270)	1730′(1090′)	1560′(920′)

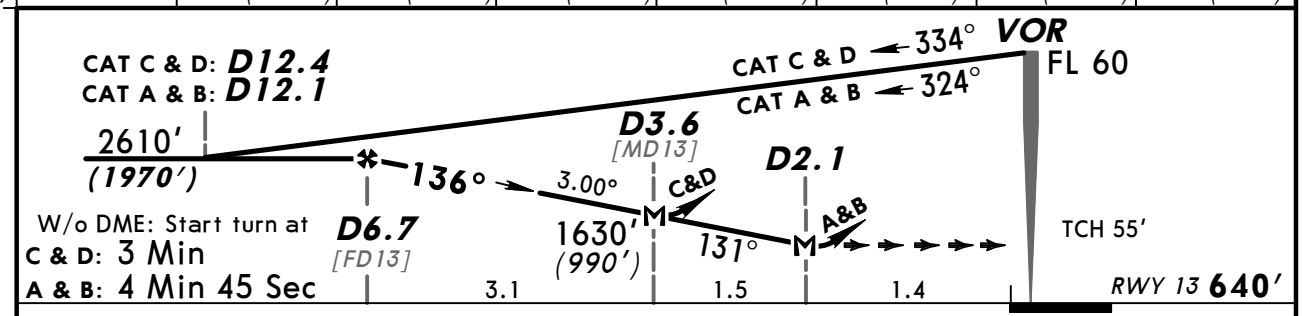

W/o DME: Start turn at
C & D: 3 Min
A & B: 4 Min 45 Sec

Gnd speed-Kts		70	90	100	120	140	160
Descent Angle	3.00°	372	478	531	637	743	849

CAT C & D: MAP at D3.6 | CAT A & B: MAP at D2.1

HIALS
PAPI

2610′ (1970′) not above on 131°

PANS OPS

STRAIGHT-IN LANDING RWY 13

MDA(H) AB: 1300′(660′) CD: 1630′(990′)

		ALS out
A	1800m	2600m
B		
C	4000m	4800m
D		

CEILING REQUIRED

CIRCLE-TO-LAND

NIGHT not authorized

Max Kts	MDA(H)	CEIL-VIS
100	1530′(860′)	1020′- 3000m
135		
180	1530′(860′)❶	1190′- 4800m
205		

❶ Wide bodied acft: MDA(H) 1660′(990′), CEIL-VIS 1320′- 5.0 km.

CHANGES: Note. Rwy elev. Bearings.

© JEPPESEN, 1999, 2010. ALL RIGHTS RESERVED.

BRIEFING STRIP ™

ATIS	MINSK Approach (Radar/R)	*MINSK Radar	MINSK-2 Tower	Ground
128.85 (Russian 135.85)	125.9	125.25	118.3	129.95

VOR	Final Apch Crs	Minimum Alt	MDA(H)	Apt Elev 670'
MNS 113.6	309°	D7.3 2640'(1970')	Refer to Minimums	RWY 670'

MISSED APCH: Climb on 311° to 2640'(1970')not above. Not before D1.2 after crossing rwy, turn RIGHT (MAX 225 KT) to VOR, then as directed.

Alt Set: MM (hPa on req) QNH on req (QFE) Trans level: FL 50 ❶ Trans alt: 3630'(2960')
Approach slope descent shall be commerced after passing D7.3.

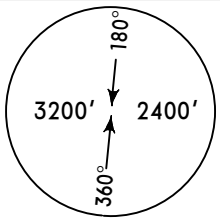

MSA
MNS VOR

❶ FL 60, if pressure is less than 733mm (977.3 hPa).

ALT/HEIGHT CONVERSION

QNH	(QFE)
3630'	(2960' - 900m)
2640'	(1970' - 600m)
1660'	(990' - 300m)

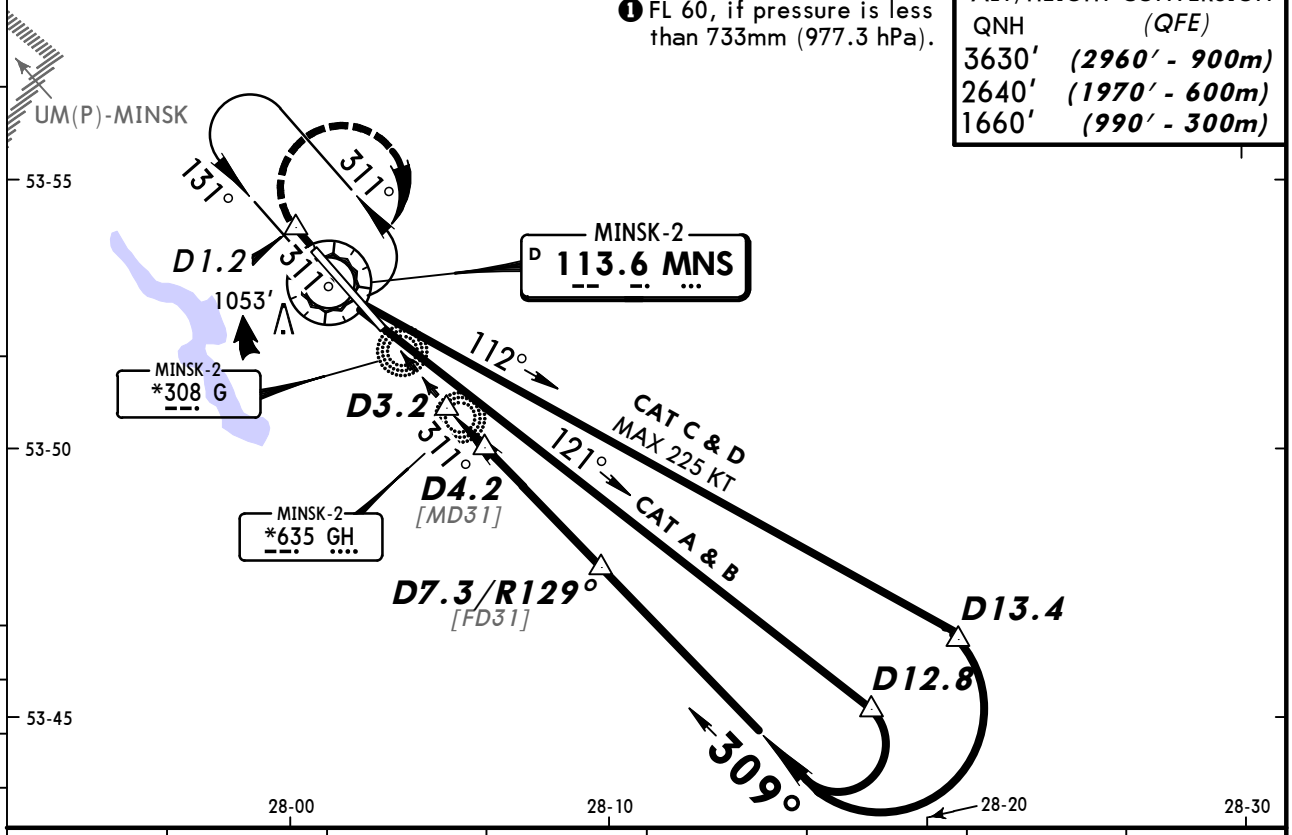

MNS DME	4.0	4.5	5.1	5.6	6.2	6.7	7.2
ALTITUDE	1590'(920')	1760'(1090')	1940'(1270')	2100'(1430')	2280'(1610')	2450'(1780')	2630'(1960')

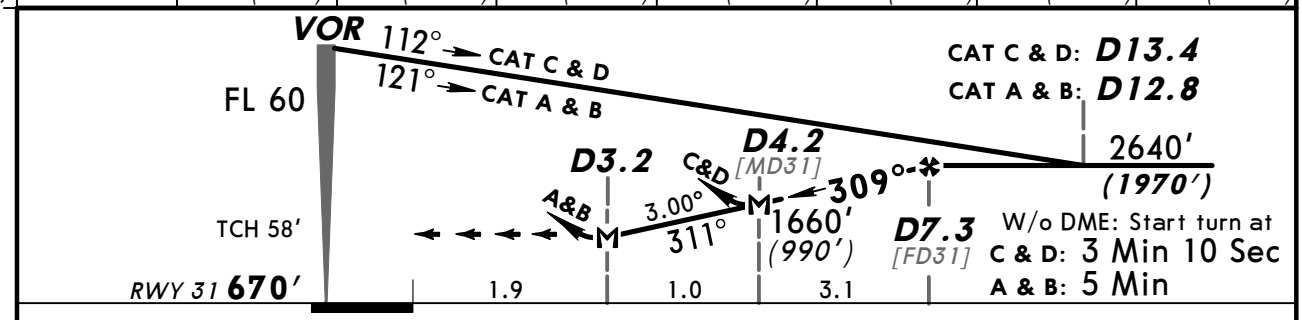

Gnd speed-Kts		70	90	100	120	140	160
Descent Angle	3.00°	372	478	531	637	743	849

CAT C & D: MAP at D4.2 | CAT A & B: MAP at D3.2

HIALS-II
PAPI
2640' (1970') not above on 311°

PANS OPS

STRAIGHT-IN LANDING RWY 31

MDA(H) AB: 1330'(660') CD: 1660'(990')

		ALS out
A	2400m	3200m
B		
C	4000m	4800m
D		

CEILING REQUIRED — CIRCLE-TO-LAND

NIGHT not authorized

Max Kts	MDA(H)	CEIL-VIS
100	1530'(860')	1020' - 3200m
135		
180	1530'(860') ❶	1190' - 4800m
205		

❶ Wide bodied acft: MDA(H) 1660'(990'), CEIL-VIS 1320' - 5.0 km.

CHANGES: Note. Bearings.

© JEPPESEN, 1999, 2010. ALL RIGHTS RESERVED.

BRIEFING STRIP

ATIS	MINSK Approach (Radar/R)	*MINSK Radar	MINSK-2 Tower	Ground
128.85 (Russian 135.85)	125.9	125.25	118.3	129.95

NDB VX	Final Apch Crs	Minimum Alt	MDA(H)	Apt Elev 670′
*635	131°	D6.7 2610′ (1970′)	990′ (350′)	RWY 640′

MISSED APCH: Climb on 131° to 1300′ (660′) or above. Not before D1.9 turn LEFT (MAX 225 KT) to VX NDB climbing to 2610′ (1970′), then as directed.

Alt Set: MM (hPa on req) QNH on req (QFE) Trans level: FL 50 ❶ Trans alt: 3630′ (2990′)
1. Approach slope descent shall be commerced after passing D6.7.
2. Acft w/o VOR DME descend by ATC.

MSA
MNS VOR
180°
3200′ 2400′
360°

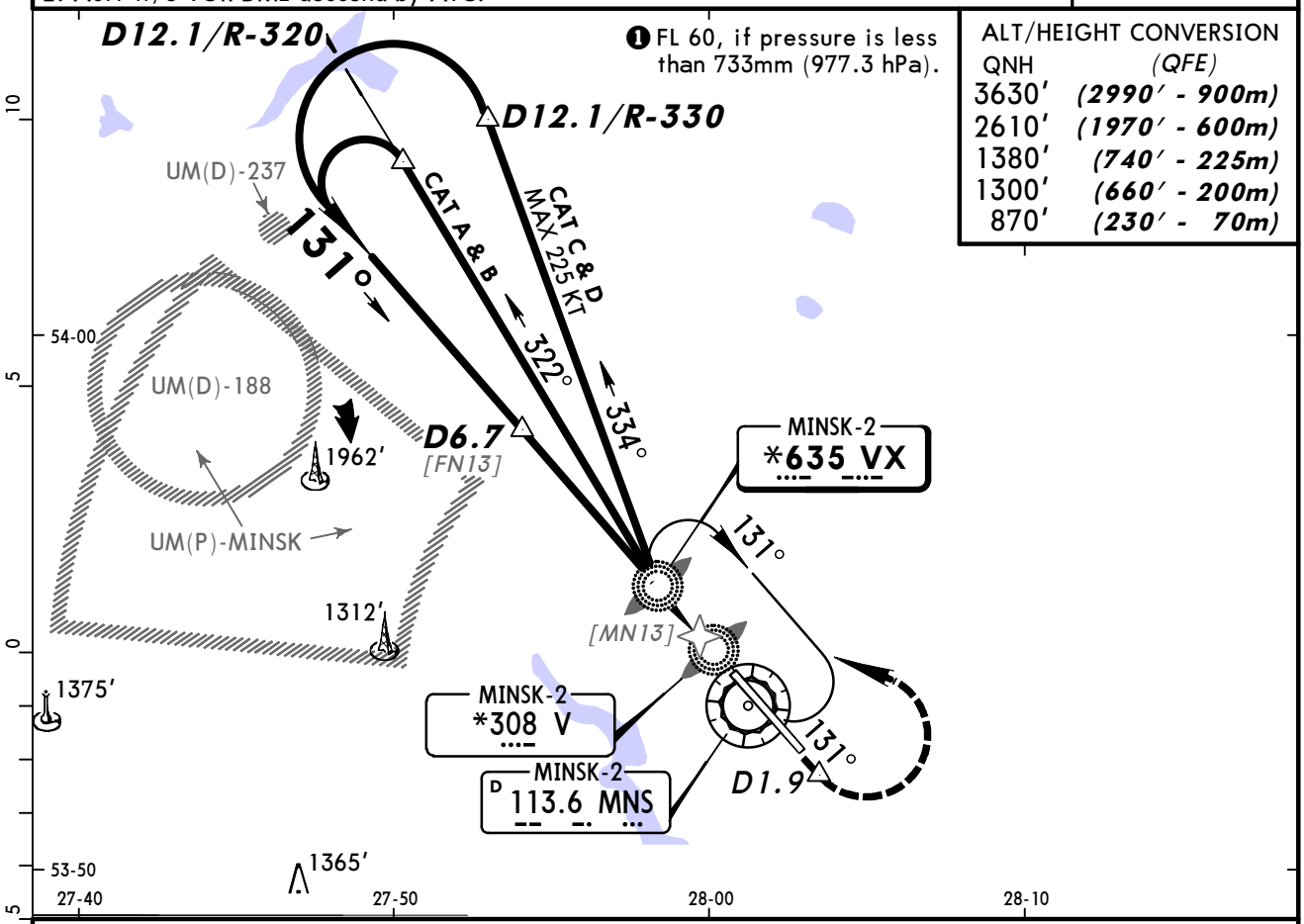

ALT/HEIGHT CONVERSION

QNH	(QFE)
3630′	(2990′ - 900m)
2610′	(1970′ - 600m)
1380′	(740′ - 225m)
1300′	(660′ - 200m)
870′	(230′ - 70m)

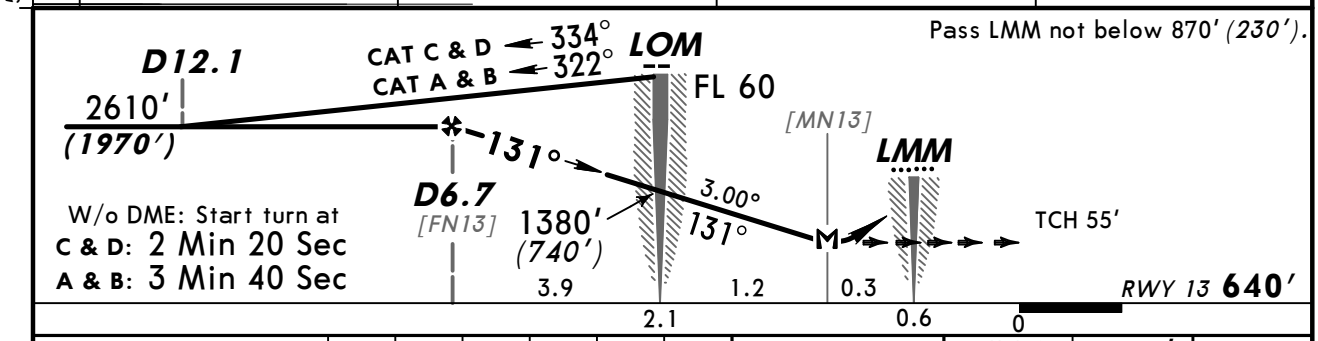

Gnd speed-Kts		70	90	100	120	140	160
Descent Angle	3.00°	372	478	531	637	743	849
D6.7 to MAP	5.1	4:22	3:24	3:04	2:33	2:11	1:55

HIALS
PAPI
1300′ (660′) or above on 131°

PANS OPS

STRAIGHT-IN LANDING RWY 13

MDA(H) 990′ (350′)

		ALS out
A	1200m	RVR 1500m VIS 1600m
B		
C		
D	RVR 1500m VIS 1600m	2000m

CEILING REQUIRED CIRCLE-TO-LAND

NIGHT not authorized

Max Kts	MDA(H)	CEIL-VIS
100	1530′ (860′)	1020′ - 3000m
135		
180	1530′ (860′) ❶	1190′ - 3000m
205	1530′ (860′) ❶	1190′ - 4000m

❶ Wide bodied acft: MDA(H) 1660′ (990′), CEIL-VIS 1320′ - 5.0 km.

CHANGES: Note. Rwy elev. Bearings.

© JEPPESEN, 1998, 2010. ALL RIGHTS RESERVED.

BRIEFING STRIP ™

ATIS	MINSK Approach (Radar/R)	*MINSK Radar	MINSK-2 Tower	Ground
128.85 (Russian 135.85)	125.9	125.25	118.3	129.95

NDB GH	Final Apch Crs	Minimum Alt D7.3	MDA(H)	Apt Elev 670'
*635	311°	2640' (1970')	1010' (340')	RWY 670'

MISSED APCH: Climb on 311° to 1330' (660') or above. Not before D1.2 turn RIGHT (MAX 225 KT) to GH NDB climbing to 2640' (1970'), then as directed.

Alt Set: MM (hPa on req) QNH on req (**QFE**) Trans level: FL 50 ❶ Trans alt: 3630' (2960')
1. Approach slope descent shall be commerced after passing D7.3.
2. Acft w/o VOR DME descend by ATC.

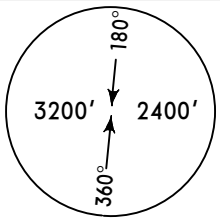

MSA
MNS VOR

❶ FL 60, if pressure is less than 733mm (977.3 hPa).

ALT/HEIGHT CONVERSION

QNH	(QFE)
3630'	(2960' - 900m)
2640'	(1970' - 600m)
1410'	(740' - 225m)
1330'	(660' - 200m)
890'	(220' - 65m)

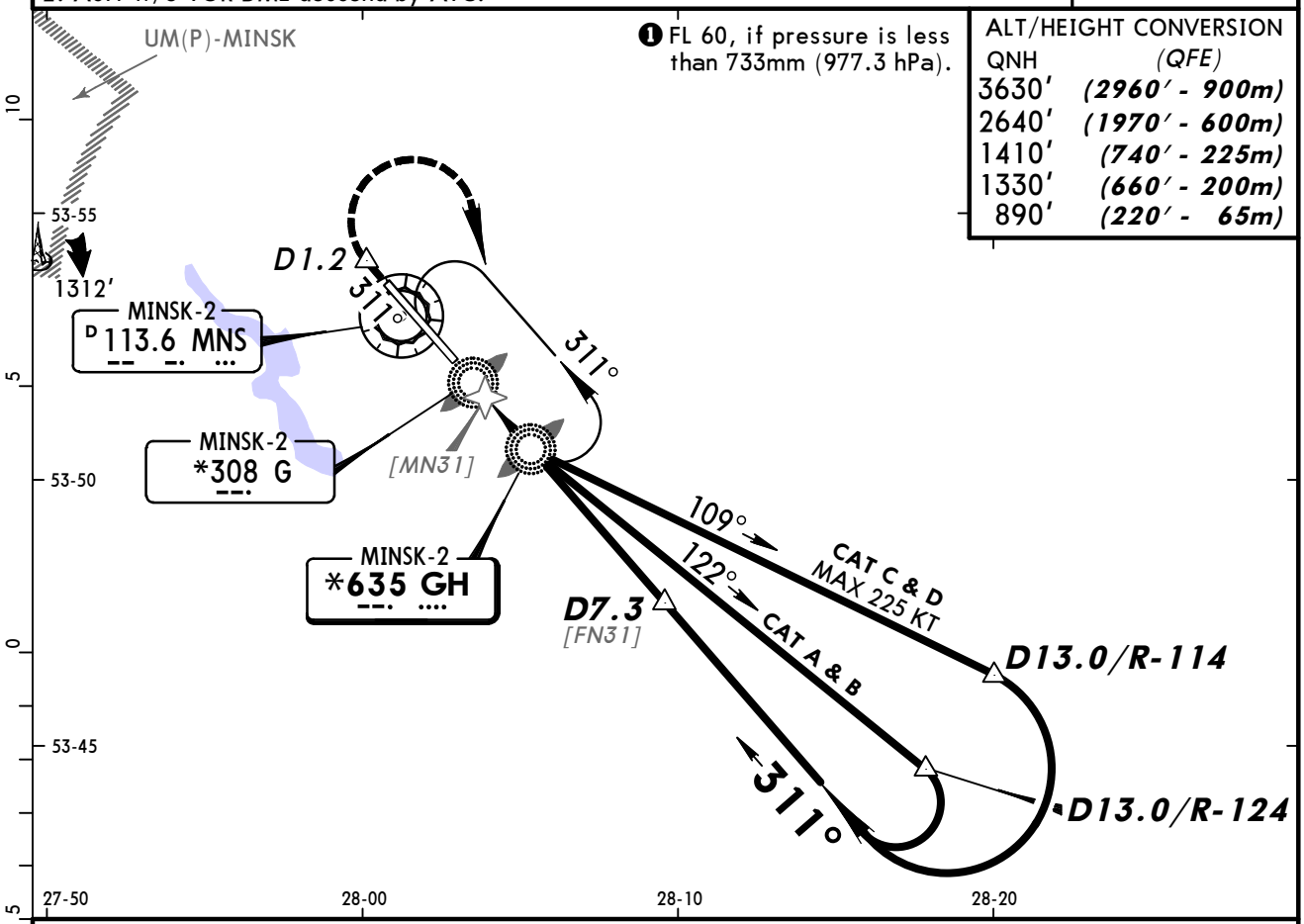

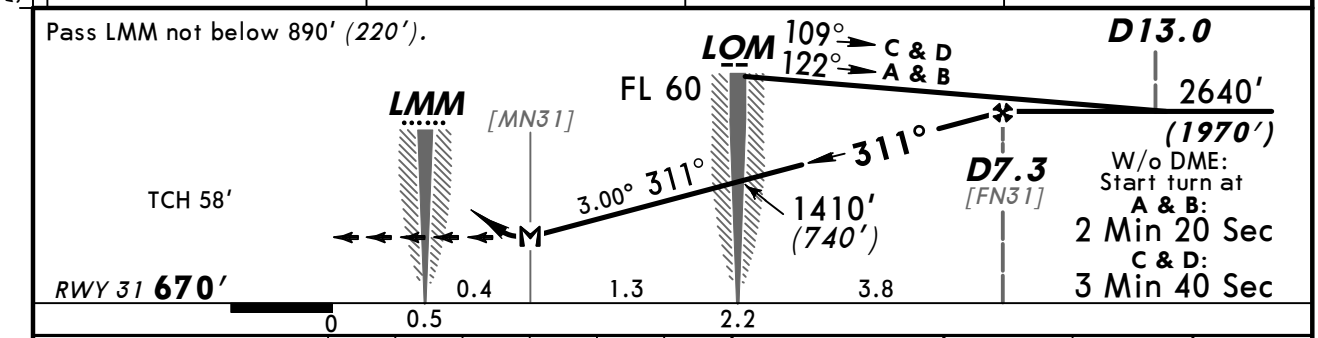

Gnd speed-Kts		70	90	100	120	140	160
Descent Angle	3.00°	372	478	531	637	743	849
D7.3 to MAP	5.1	4:22	3:24	3:04	2:33	2:11	1:55

HIALS-II
PAPI
1330' (660') or above on 311°

PANS OPS

STRAIGHT-IN LANDING RWY 31

MDA(H) 1010' (340')

		ALS out
A	1200m	RVR 1500m VIS 1600m
B		
C		
D	RVR 1500m VIS 1600m	

CEILING REQUIRED CIRCLE-TO-LAND

NIGHT not authorized

Max Kts	MDA(H)	CEIL-VIS
100	1530' (860')	1020' - 3000m
135		
180	1530' (860') ❶	1190' - 3000m
205	1530' (860') ❶	1190' - 4000m

❶ Wide bodied acft: MDA(H) 1660' (990'), CEIL-VIS 1320' - 5.0 km.

CHANGES: Note. Bearings.

© JEPPESEN, 1998, 2010. ALL RIGHTS RESERVED.

(c) JEPPESEN SANDERSON, INC., 2012, ALL RIGHTS RESERVED

JEPPESEN
JeppView for Windows

Chart changes since cycle 07-2012

ADD = added chart, REV = revised chart, DEL = deleted chart.

ACT	PROCEDURE IDENT	INDEX	REV DATE	EFF DATE

MINSK, (MINSK-2 - UMMS)

(c) JEPPESEN SANDERSON, INC., 2012, ALL RIGHTS RESERVED

TERMINAL CHART CHANGE NOTICES

No Chart Change Notices for Airport UMMS