Page 1
Changed chart(s) since Disc 16-2010
ADD = Added chart, REV = Revised chart, DEL = Deleted chart.

ACT	PROCEDURE IDENT	INDEX	REV DATE	EFF DATE

No revision activity since Disc 16-2010

TERMINAL CHART NOTAMs

No Chart NOTAMs for Airport UKLN

General Info

Chernivtsi, UKR
N 48° 15.6' E 25° 58.9' Mag Var: 4.3°E
Elevation: 826'

Public, IFR, Control Tower, Customs, Landing Fee
Fuel: Jet A-1
Repairs: Major Airframe, Major Engine

Time Zone Info: GMT+2:00 uses DST

Runway Info

Runway 15-33 7270' x 138' asphalt

Runway 15 (149.0°M) TDZE 801'
  Lights: Edge, ALS
Runway 33 (329.0°M) TDZE 827'
  Lights: Edge, ALS

Communications Info

Chernivtsi Tower **121.3**

Notebook Info

Licensed to npan. Printed on 10 Sep 2010.
NOTICE: PRINTED FROM AN EXPIRED REVISION. Disc 17-2010

UKLN/CWC
CHERNIVTSI

JEPPESEN
2 JUL 10 10-2

CHERNIVTSI, UKRAINE

STAR

Apt Elev 826′

Alt Set: hPa (MM on request)
Trans level: By ATC Trans alt: 10010′

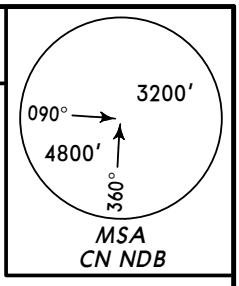

BUKOV FIVE CHARLIE (BUKOV 5C) *[BUKO5C]*
LOPNU ONE GOLF (LOPNU 1G) *[LOPN1G]*
RIMOS FIVE CHARLIE (RIMOS 5C) *[RIMO5C]*
TUMBI ONE CHARLIE (TUMBI 1C) *[TUMB1C]*
TUMUK FIVE CHARLIE (TUMUK 5C) *[TUMU5C]*❶
RWY 15 ARRIVALS

❶ By ATC.

LOPNU
N49 04.5 E026 40.9
At or above 9030′

208°
55
3120
LOPNU 1G

RIMOS
N48 45.5 E025 58.8
At or above 9030′

178°
28
3120
RIMOS 5C

TUMUK
N48 41.0 E025 30.0
At or above 9030′

138°
29
3120
TUMUK 5C ❶

TUMBI
N48 30.2 E026 36.1
At or above 9030′

241°
29
3120
TUMBI 1C

(IAF)
*805 CN
N48 17.9 E025 57.0
At or above 4930′

21
3120
BUKOV 5C

355°

BUKOV
N47 57.1 E025 57.5
At or above 9030′

N
NOT TO SCALE

HOLDING OVER CN

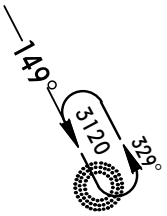

FT/METER CONVERSION
QNH

10010′	-	3050m
9030′	-	2750m
4930′	-	1500m
3120′	-	950m

CHANGES: STAR LOPNU 1C redesignated 1G.

© JEPPESEN, 2004, 2010. ALL RIGHTS RESERVED.

Licensed to npan. Printed on 10 Sep 2010.
NOTICE: PRINTED FROM AN EXPIRED REVISION. Disc 17-2010

JEPPESEN
JeppView 3.7.1.0

UKLN/CWC
CHERNIVTSI

JEPPESEN
2 JUL 10 (10-2A)

CHERNIVTSI, UKRAINE
STAR

Apt Elev	
826′	Alt Set: hPa (MM on request) Trans level: By ATC Trans alt: 10010′

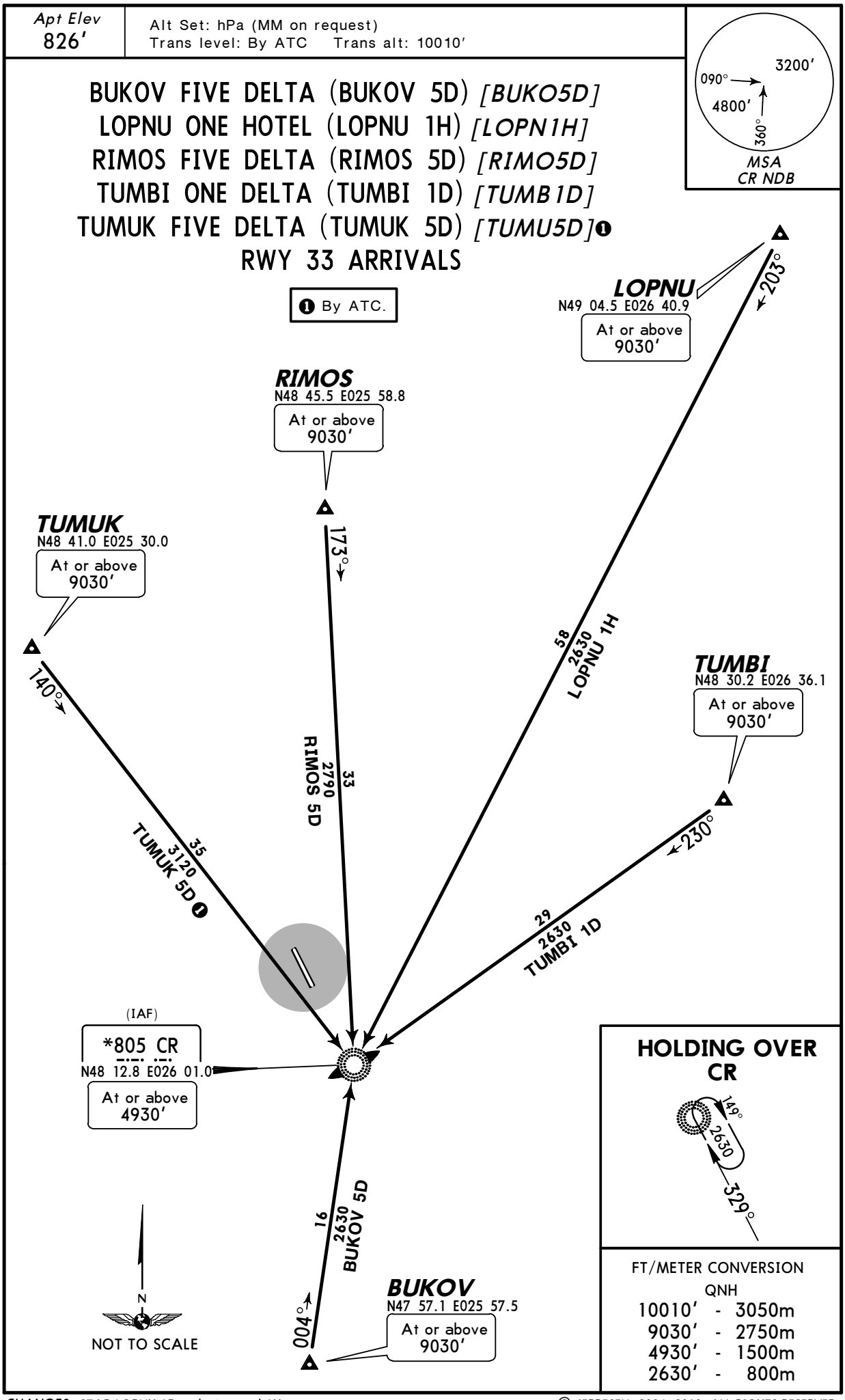

CHANGES: STAR LOPNU 1D redesignated 1H.

© JEPPESEN, 2004, 2010. ALL RIGHTS RESERVED.

Licensed to npan. Printed on 10 Sep 2010.
NOTICE: PRINTED FROM AN EXPIRED REVISION. Disc 17-2010

Apt Elev 826′	Trans level: By ATC Trans alt: 10010′

BUKOV FIVE ALFA (BUKOV 5A) *[BUKO5A]*
LOPNU ONE ECHO (LOPNU 1E) *[LOPN1E]*
RIMOS FIVE ALFA (RIMOS 5A) *[RIMO5A]*
TUMBI ONE ALFA (TUMBI 1A) *[TUMB1A]*
TUMUK FIVE ALFA (TUMUK 5A) *[TUMU5A]*
RWY 15 DEPARTURES

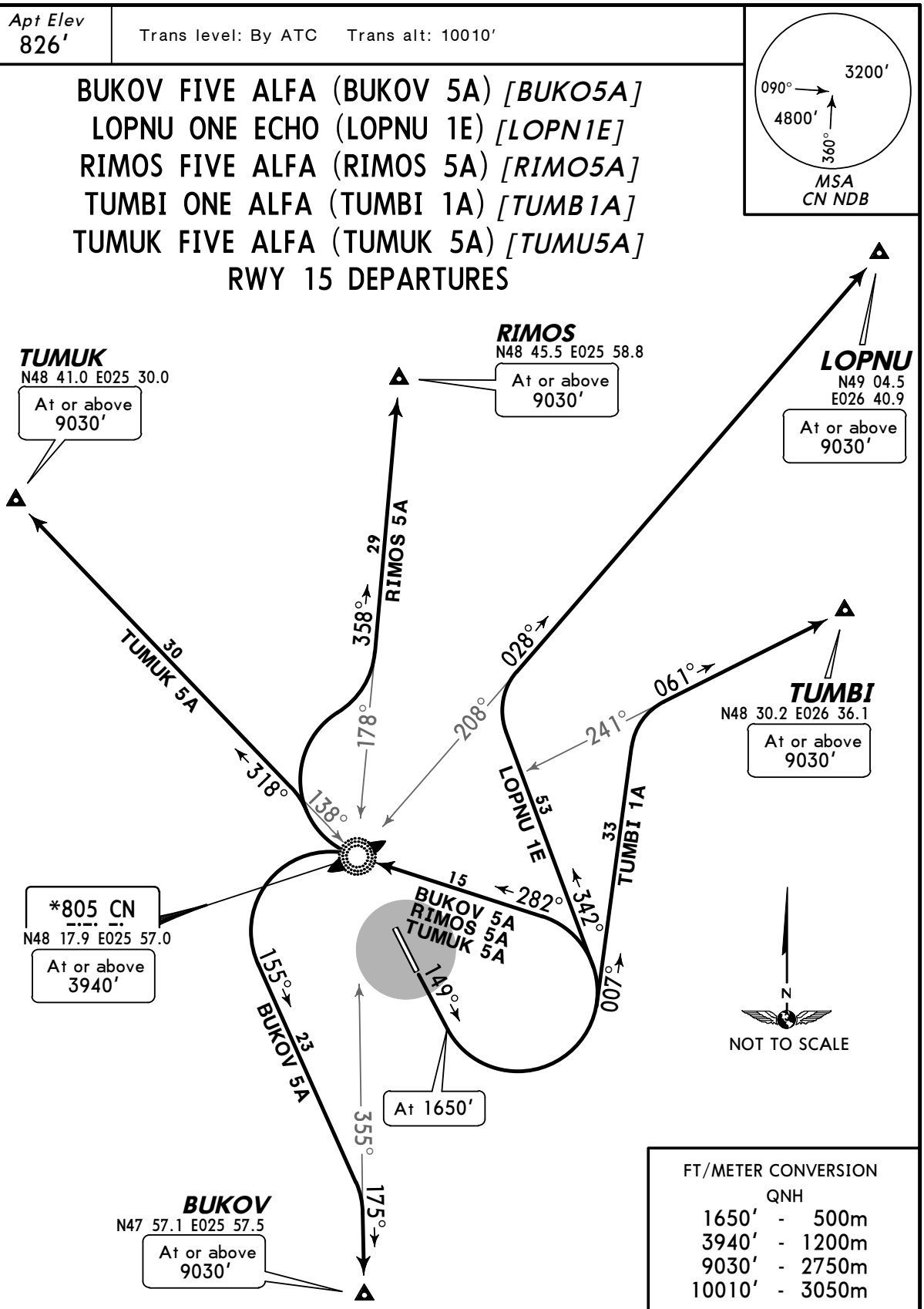

FT/METER CONVERSION QNH	
1650′	500m
3940′	1200m
9030′	2750m
10010′	3050m

SID	ROUTING
BUKOV 5A	Climb on 149° track to 1650′, turn LEFT, intercept 282° bearing to CN, turn LEFT, 155° track, turn RIGHT, intercept 175° bearing from CN to BUKOV.
LOPNU 1E	Climb on 149° track to 1650′, turn LEFT, 342° track, intercept 028° bearing from CN to LOPNU.
RIMOS 5A	Climb on 149° track to 1650′, turn LEFT, intercept 282° bearing to CN, turn RIGHT, intercept 358° bearing from CN to RIMOS.
TUMBI 1A	Climb on 149° track to 1650′, turn LEFT, 007° track, intercept 061° bearing from CN to TUMBI.
TUMUK 5A	Climb on 149° track to 1650′, turn LEFT, intercept 282° bearing to CN, turn RIGHT, intercept 318° bearing from CN to TUMUK.

CHANGES: SID LOPNU 1A redesignated 1E.

© JEPPESEN, 2004, 2010. ALL RIGHTS RESERVED.

Licensed to npan. Printed on 10 Sep 2010.
NOTICE: PRINTED FROM AN EXPIRED REVISION. Disc 17-2010

Apt Elev 826′	Trans level: By ATC Trans alt: 10010′ EXPECT close-in obstacles.

BUKOV FIVE BRAVO (BUKOV 5B) *[BUKO5B]*
LOPNU ONE FOXTROT (LOPNU 1F) *[LOPN1F]*
RIMOS FIVE BRAVO (RIMOS 5B) *[RIMO5B]*
TUMBI ONE BRAVO (TUMBI 1B) *[TUMB1B]*
TUMUK FIVE BRAVO (TUMUK 5B) *[TUMU5B]* ❶
RWY 33 DEPARTURES

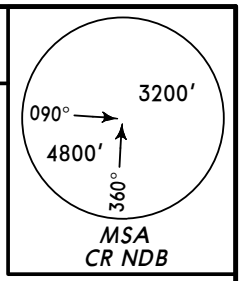

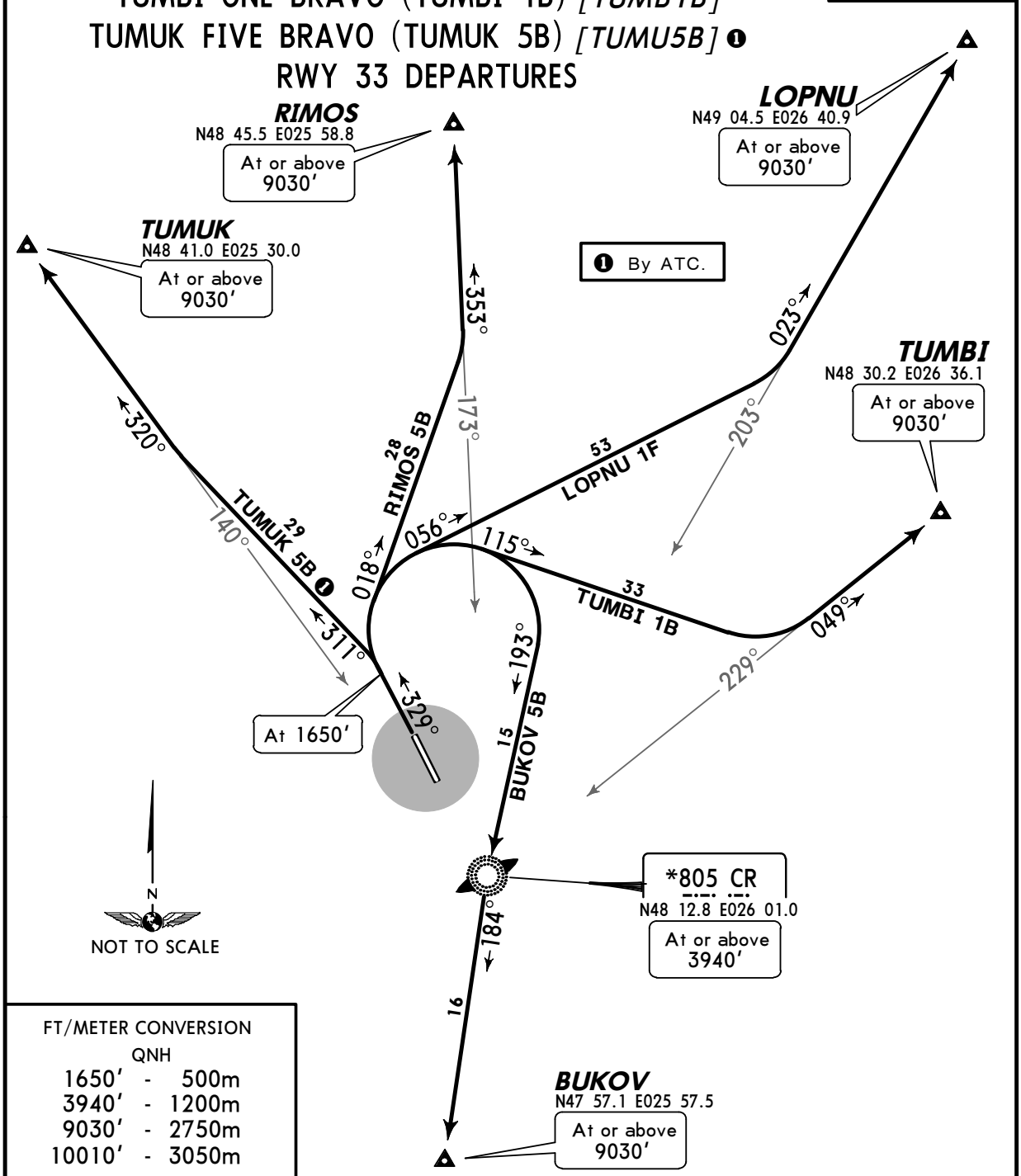

FT/METER CONVERSION

QNH		
1650′	-	500m
3940′	-	1200m
9030′	-	2750m
10010′	-	3050m

SID	ROUTING
BUKOV 5B	Climb on 329° track to 1650′, turn RIGHT, intercept 193° bearing to CR, turn LEFT, 184° bearing to BUKOV.
LOPNU 1F	Climb on 329° track to 1650′, turn RIGHT, 056° track, intercept 023° bearing from CR to LOPNU.
RIMOS 5B	Climb on 329° track to 1650′, turn RIGHT, 018° track, intercept 353° bearing from CR to RIMOS.
TUMBI 1B	Climb on 329° track to 1650′, turn RIGHT, 115° track, intercept 049° bearing from CR to TUMBI.
TUMUK 5B ❶	Climb on 329° track to 1650′, turn LEFT, 311° track, intercept 320° bearing from CR to TUMUK.

CHANGES: SID LOPNU 1B redesignated 1F.

© JEPPESEN, 2004, 2010. ALL RIGHTS RESERVED.

Licensed to npan. Printed on 10 Sep 2010.
NOTICE: PRINTED FROM AN EXPIRED REVISION. Disc 17-2010

UKLN/CWC

Apt Elev **826′**
N48 15.6 E025 58.9

JEPPESEN
9 APR 10 (10-8)

CHERNIVTSI, UKRAINE

CHERNIVTSI

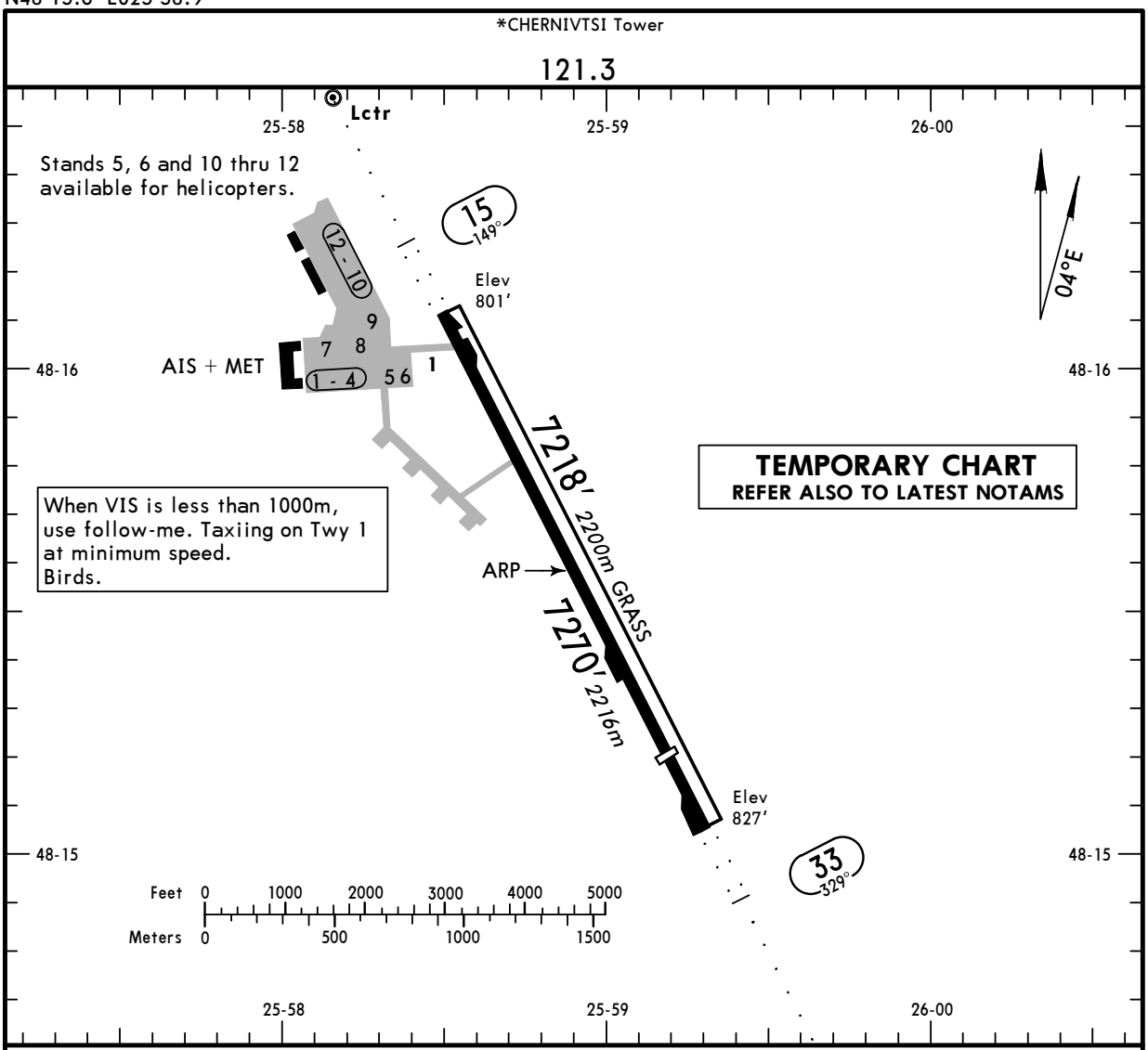

ADDITIONAL RUNWAY INFORMATION

RWY		USABLE LENGTHS LANDING BEYOND Threshold	Glide Slope	TAKE-OFF	WIDTH
15 33	RL *(60m)* ALS RVR	6233′ *1900m*	5971′ *1820m* 6204′ *1891m*	6233′ *1900m*	138′ *42m*
15 33	Grass runway				164′ *50m*

JAR-OPS

TAKE-OFF [1]

	All Rwys		
	LVP must be in force		
	RCLM (DAY only) or RL	RCLM (DAY only) or RL	NIL (DAY only)
A	*250m*	*400m*	*500m*
B			
C			
D	*300m*		

[1] Operators applying U.S. Ops Specs: CL required below 300m.

CHANGES: New temporary chart.

© JEPPESEN, 2010. ALL RIGHTS RESERVED.

Licensed to npan. Printed on 10 Sep 2010.
NOTICE: PRINTED FROM AN EXPIRED REVISION. Disc 17-2010

UKLN/CWC

Apt Elev **826′**
N48 15.6 E025 58.9

JEPPESEN
12 FEB 10 (10-9)

CHERNIVTSI, UKRAINE

CHERNIVTSI

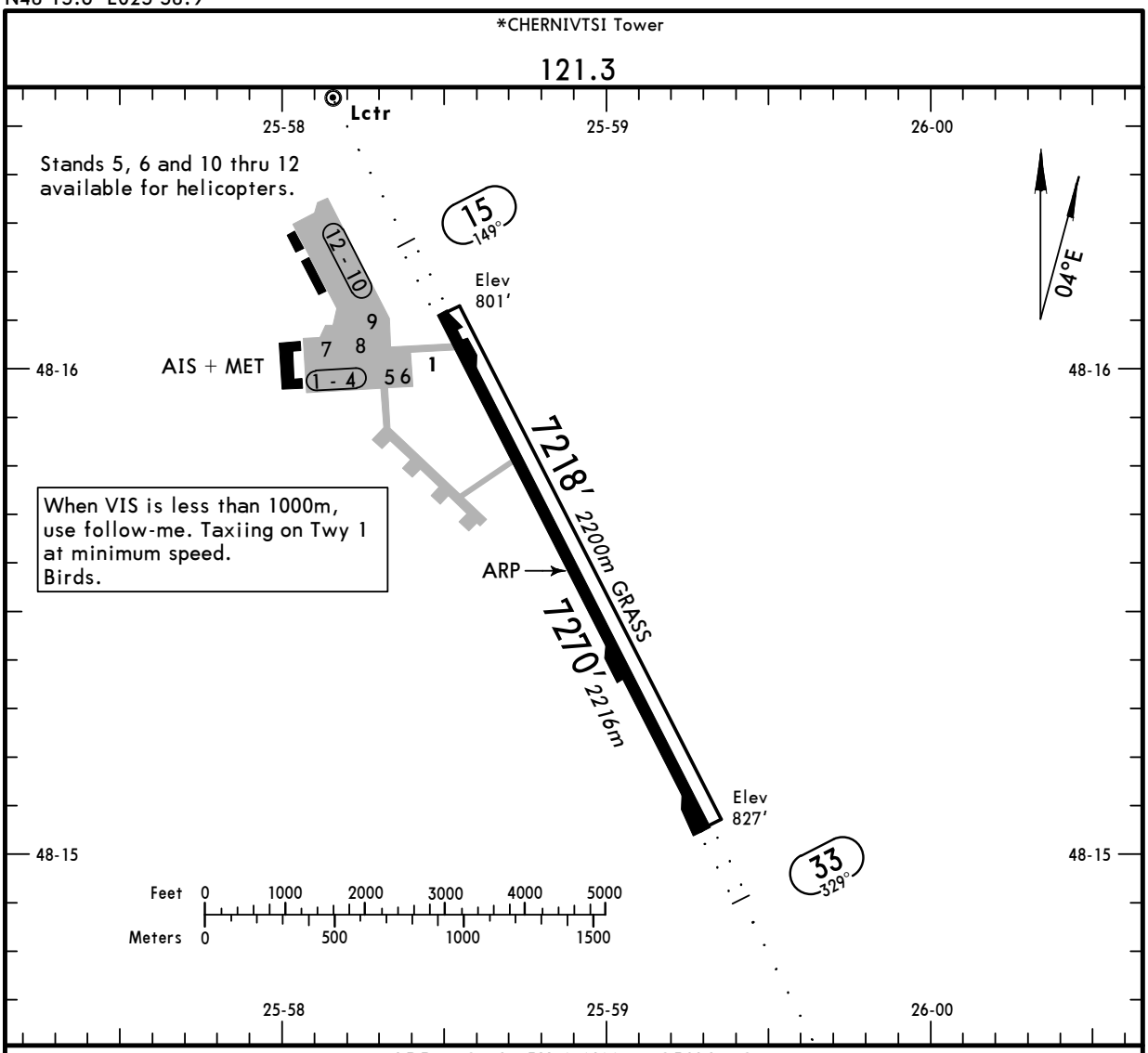

ADDITIONAL RUNWAY INFORMATION

RWY		USABLE LENGTHS LANDING BEYOND Threshold	Glide Slope	TAKE-OFF	WIDTH
15 33	RL *(60m)* ALS RVR		5971′ *1820m* 6204′ *1891m*		138′ *42m*
15 33	Grass runway				164′ *50m*

JAR-OPS

TAKE-OFF [1]

	All Rwys		
	LVP must be in force RCLM (DAY only) or RL	RCLM (DAY only) or RL	NIL (DAY only)
A	*250m*	*400m*	*500m*
B			
C			
D	*300m*		

[1] Operators applying U.S. Ops Specs: CL required below 300m.

CHANGES: Minimums.

© JEPPESEN, 2001, 2010. ALL RIGHTS RESERVED.

Licensed to npan. Printed on 10 Sep 2010.
NOTICE: PRINTED FROM AN EXPIRED REVISION. Disc 17-2010

UKLN/CWC
CHERNIVTSI

JEPPESEN
12 FEB 10 (11-1)

CHERNIVTSI, UKRAINE
ILS or NDB Rwy 15

BRIEFING STRIP ™

*CHERNIVTSI Tower
121.3

LOC ICN *109.5	Final Apch Crs 149°	GS LOM 1509′ (708′)	ILS DA(H) Refer to Minimums	Apt Elev 826′
NDB CN *805		Minimum Alt LOM 1510′ (709′)	NDB MDA(H) 1220′ (419′)	RWY 801′

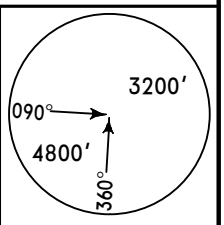

MSA CN NDB

MISSED APCH: Climb on 149° to 1650′, then turn LEFT onto 329° climbing to 2790′, then according to chart.

Alt Set: hPa (MM on req) | Rwy Elev: 29 hPa | Trans level: By ATC | Trans alt: 10010′

FT/METER CONVERSION
QNH

10010′	3050m
4930′	1500m
3120′	950m
2790′	850m
2630′	800m
2300′	700m
1650′	500m
1510′	460m

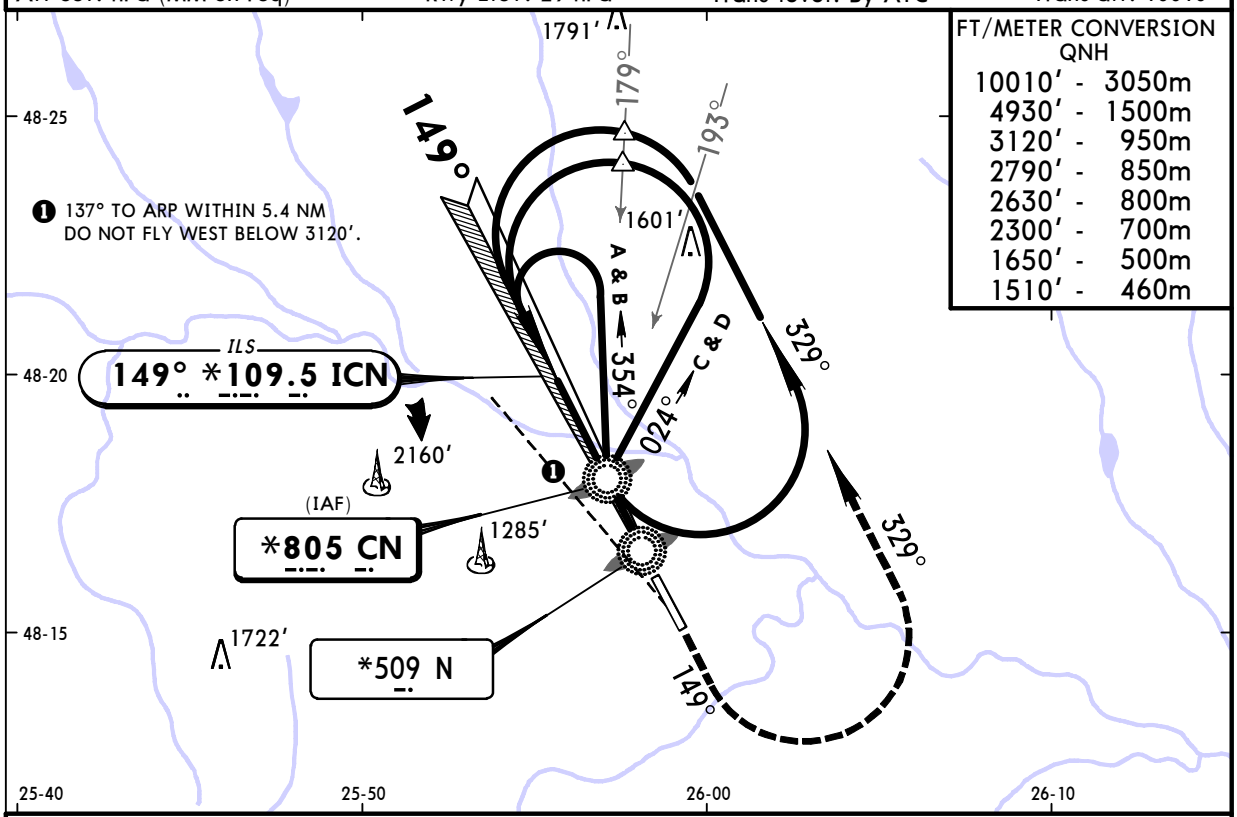

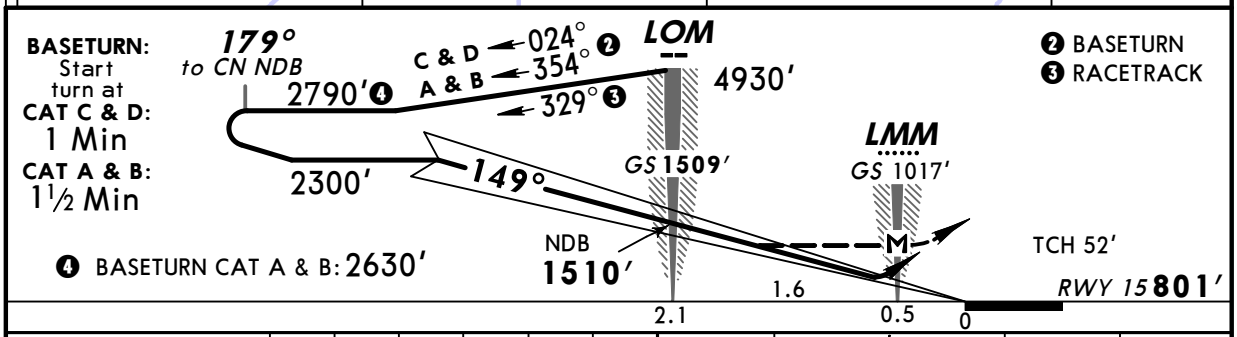

Gnd speed-Kts	70	90	100	120	140	160	ALS	1650′ on 149°	329° LT	2790′
ILS GS or NDB Desc angle 3.00°	377	484	538	646	753	861				
MAP at LMM										

PANS OPS

JAR-OPS STRAIGHT-IN LANDING RWY 15

ILS DA(H) AB: 1001′ (200′) C: 1007′ (206′) D: 1017′ (216′)

LOC (GS out) NDB MDA(H) 1220′ (419′)

CIRCLE-TO-LAND ❶ Prohibited West of apt between 180° and 317° to ARP

	ILS FULL	ILS ALS out	LOC (GS out)	NDB	NDB ALS out	Max Kts	MDA(H)	VIS
A	RVR 800m	RVR 1000m	NOT AUTH	RVR 1300m	RVR 1500m	100	1320′ (519′)	1500m
B				RVR 1400m		135	1330′ (529′)	1600m
C				RVR 1600m	RVR 1800m	180	1690′ (889′)	2400m
D				RVR 1800m	RVR 2000m	205	2010′ (1209′)	3600m

❶ Circling height based on rwy 15 thresh elev of 801′.

CHANGES: Minimums.

© JEPPESEN, 2004, 2010. ALL RIGHTS RESERVED.

Licensed to npan. Printed on 10 Sep 2010.
NOTICE: PRINTED FROM AN EXPIRED REVISION. Disc 17-2010

JEPPESEN
JeppView 3.7.1.0

UKLN/CWC
CHERNIVTSI

JEPPESEN
12 FEB 10 (11-2)

CHERNIVTSI, UKRAINE
ILS or NDB Rwy 33

BRIEFING STRIP ™

*CHERNIVTSI Tower
121.3

LOC ICR *110.3	Final Apch Crs 329°	GS/ Minimum Alt LOM 1690′(863′)	ILS DA(H) 1027′(200′)	Apt Elev 826′
NDB CR *805			NDB MDA(H) 1140′(313′)	RWY 827′

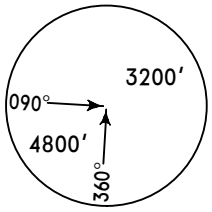

MSA CR NDB

MISSED APCH: Climb on 329° to 1650′, then turn RIGHT onto 149° climbing to 2790′, then according to chart.

Alt Set: hPa (MM on req) | Rwy Elev: 30 hPa | Trans level: By ATC | Trans alt: 10010′

FT/METER CONVERSION
QNH

10010′ -	3050m
4930′ -	1500m
3120′ -	950m
2790′ -	850m
2630′ -	800m
2300′ -	700m
1690′ -	515m
1650′ -	500m

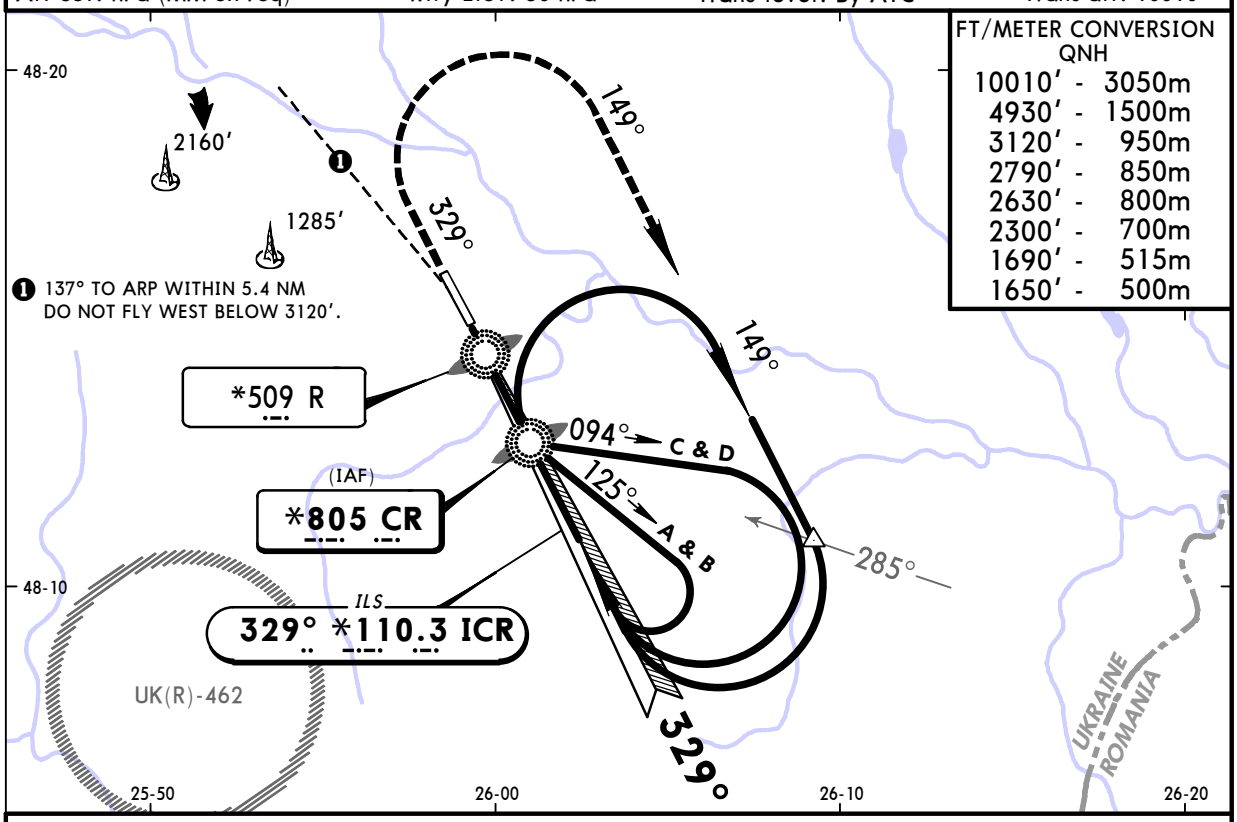

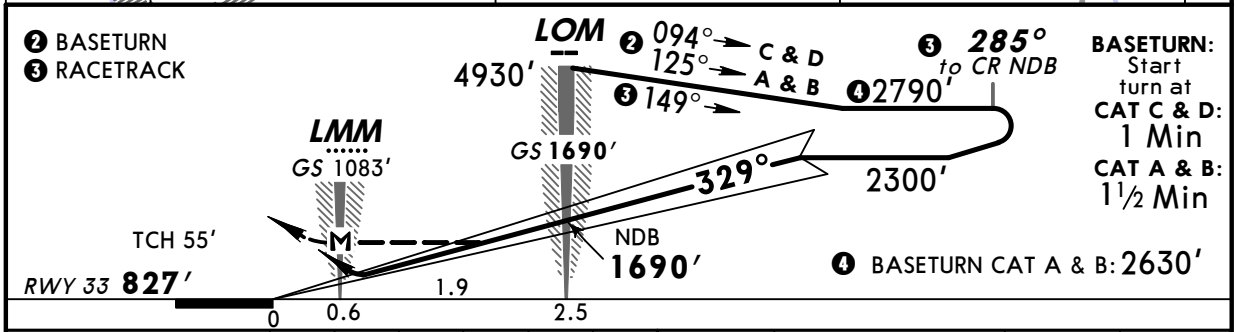

BASETURN: Start turn at
CAT C & D: 1 Min
CAT A & B: 1½ Min

Gnd speed-Kts	70	90	100	120	140	160	ALS	1650′ on 329°	149° RT	2790′
ILS GS or NDB Desc angle 3.00°	377	484	538	646	753	861				
MAP at LMM										

JAR-OPS STRAIGHT-IN LANDING RWY 33

	ILS DA(H) 1027′(200′) FULL	ILS DA(H) 1027′(200′) ALS out	LOC (GS out)	NDB MDA(H) 1140′(313′)	NDB MDA(H) 1140′(313′) ALS out
A	RVR 800m	RVR 1000m	NOT AUTH	RVR 1300m	RVR 1500m
B				RVR 1400m	
C				RVR 1600m	RVR 1800m
D				RVR 1800m	RVR 2000m

CIRCLE-TO-LAND ❶
Prohibited West of apt between 180° and 317° to ARP

Max Kts	MDA(H)	VIS
100	1320′(493′)	1500m
135	1330′(503′)	1600m
180	1690′(863′)	2400m
205	2010′(1183′)	3600m

PANS OPS

❶ Circling height based on rwy 33 thresh elev of 827′.

CHANGES: Minimums.

© JEPPESEN, 2004, 2010. ALL RIGHTS RESERVED.

Licensed to npan. Printed on 10 Sep 2010.
NOTICE: PRINTED FROM AN EXPIRED REVISION. Disc 17-2010

JEPPESEN
JeppView 3.7.1.0

UKLN/CWC
CHERNIVTSI

JEPPESEN
9 APR 10 (16-01)

CHERNIVTSI, UKRAINE
2 NDB Rwy 33

BRIEFING STRIP ™

*CHERNIVTSI Tower
121.3

NDB CR	Final Apch Crs	Minimum Alt LOM	MDA(H)	Apt Elev / RWY
*805	329°	1740′(913′)	1140′(313′)	Apt Elev 826′ / RWY 827′

MISSED APCH: Climb on 329° to 1650′, then turn RIGHT onto 149° climbing to 2790′, then according to chart.

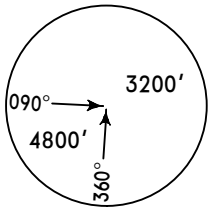

MSA CR NDB

Alt Set: hPa (MM on req) Rwy Elev: 30 hPa Trans level: By ATC Trans alt: 10010′

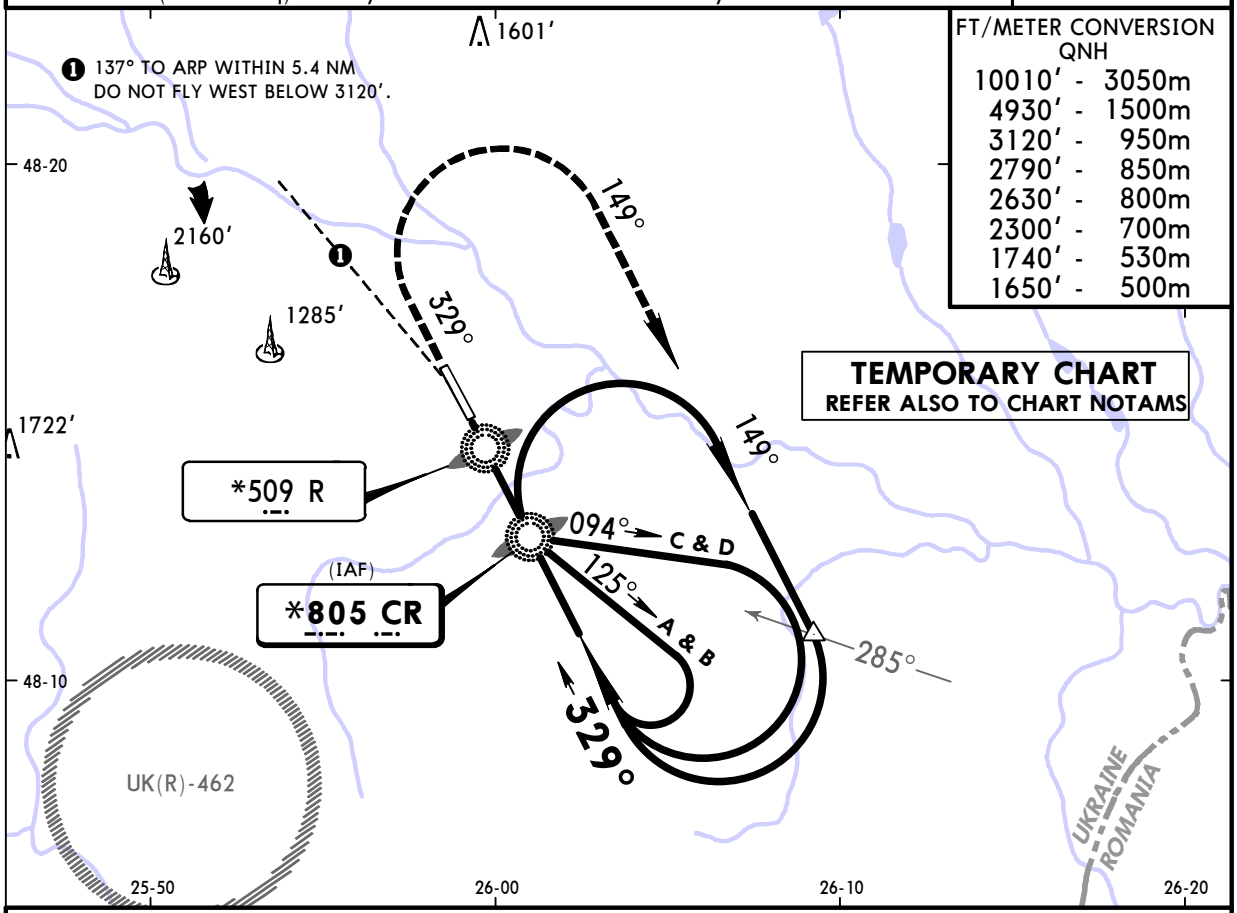

FT/METER CONVERSION
QNH

10010′	3050m
4930′	1500m
3120′	950m
2790′	850m
2630′	800m
2300′	700m
1740′	530m
1650′	500m

TEMPORARY CHART
REFER ALSO TO CHART NOTAMS

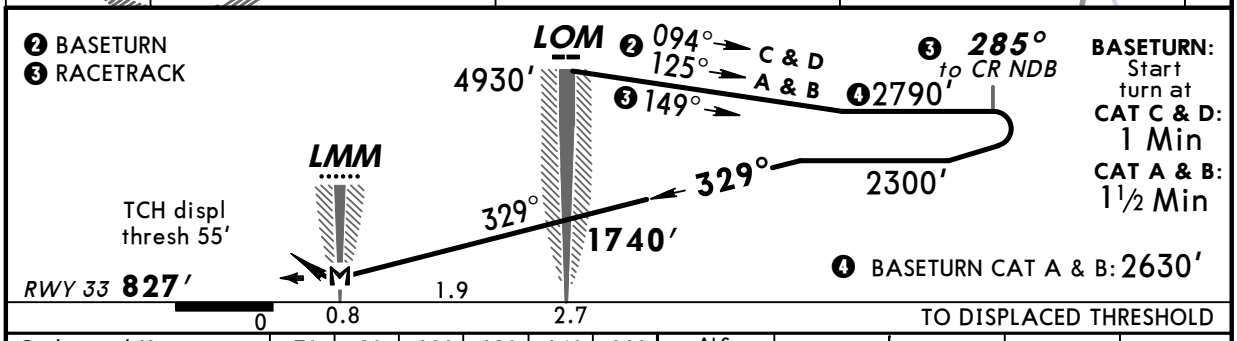

BASETURN: Start turn at
CAT C & D: 1 Min
CAT A & B: 1½ Min

Gnd speed-Kts		70	90	100	120	140	160
Descent angle	3.00°	372	478	531	637	743	849
MAP at LMM							

ALS

1650′ on 329° | 149° RT | 2790′

PANS OPS

JAR-OPS STRAIGHT-IN LANDING RWY 33

MDA(H) 1140′(313′)

		ALS out
A	RVR 1300m	RVR 1500m
B	RVR 1400m	
C	RVR 1600m	RVR 1800m
D	RVR 1800m	RVR 2000m

CIRCLE-TO-LAND ❶

Prohibited West of apt between 180°and 317° to ARP

Max Kts	MDA(H)	VIS
100	1320′ (493′)	1500m
135	1330′ (503′)	1600m
180	1690′ (863′)	2400m
205	2010′ (1183′)	3600m

❶ Circling height based on rwy 33 thresh elev of 827′.

CHANGES: New temporary procedure.

© JEPPESEN, 2010. ALL RIGHTS RESERVED.