Page 1
Changed chart(s) since Disc 15-2010
ADD = Added chart, REV = Revised chart, DEL = Deleted chart.

ACT	PROCEDURE IDENT	INDEX	REV DATE	EFF DATE

No revision activity since Disc 15-2010

TERMINAL CHART NOTAMs

No Chart NOTAMs for Airport UKDE

General Info

Zaporizhzhia, UKR
N 47° 52.0' E 35° 18.9' Mag Var: 5.8°E
Elevation: 373'

Public, IFR, Control Tower, Customs, Landing Fee
Fuel: Jet, Jet A-1
Repairs: Minor Airframe, Minor Engine

Time Zone Info: GMT+2:00 uses DST

Runway Info

Runway 02-20 8202' x 138' concrete

Runway 02 (18.0°M) TDZE 339'
  Lights: Edge, ALS
Runway 20 (198.0°M) TDZE 373'
  Lights: Edge, ALS

Communications Info

Zaporizhzhia Tower **118.2**
Zaporizhzhia Approach Rad Approach Control **119.2**

Notebook Info

Licensed to npan. Printed on 06 Sep 2010.
NOTICE: PRINTED FROM AN EXPIRED REVISION. Disc 16-2010

UKDE/OZH MOKRAYA

JEPPESEN 19 DEC 08 (10-2)

ZAPORIZHZHIA, UKRAINE

STAR

Apt Elev 373′

Alt Set: hPa (MM on request)
Trans level: By ATC Trans alt: 10010′

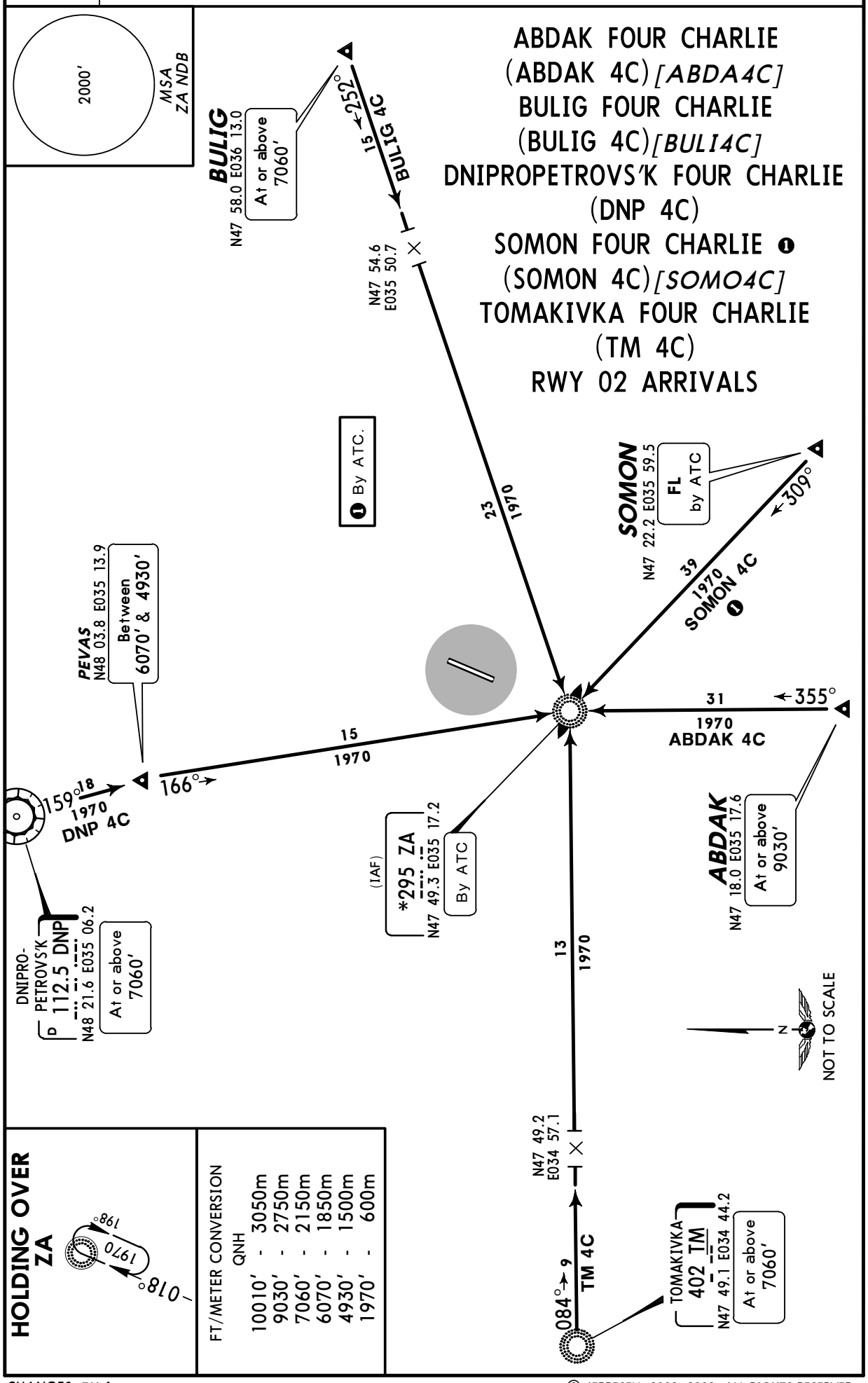

CHANGES: TM frequency.

© JEPPESEN, 2002, 2008. ALL RIGHTS RESERVED.

Licensed to npan. Printed on 06 Sep 2010.
NOTICE: PRINTED FROM AN EXPIRED REVISION. Disc 16-2010

JEPPESEN
JeppView 3.7.0.2

UKDE/OZH
MOKRAYA

JEPPESEN 19 DEC 08 (10-2A)

ZAPORIZHZHIA, UKRAINE
STAR

Apt Elev 373′

Alt Set: hPa (MM on request)
Trans level: By ATC Trans alt: 10010′

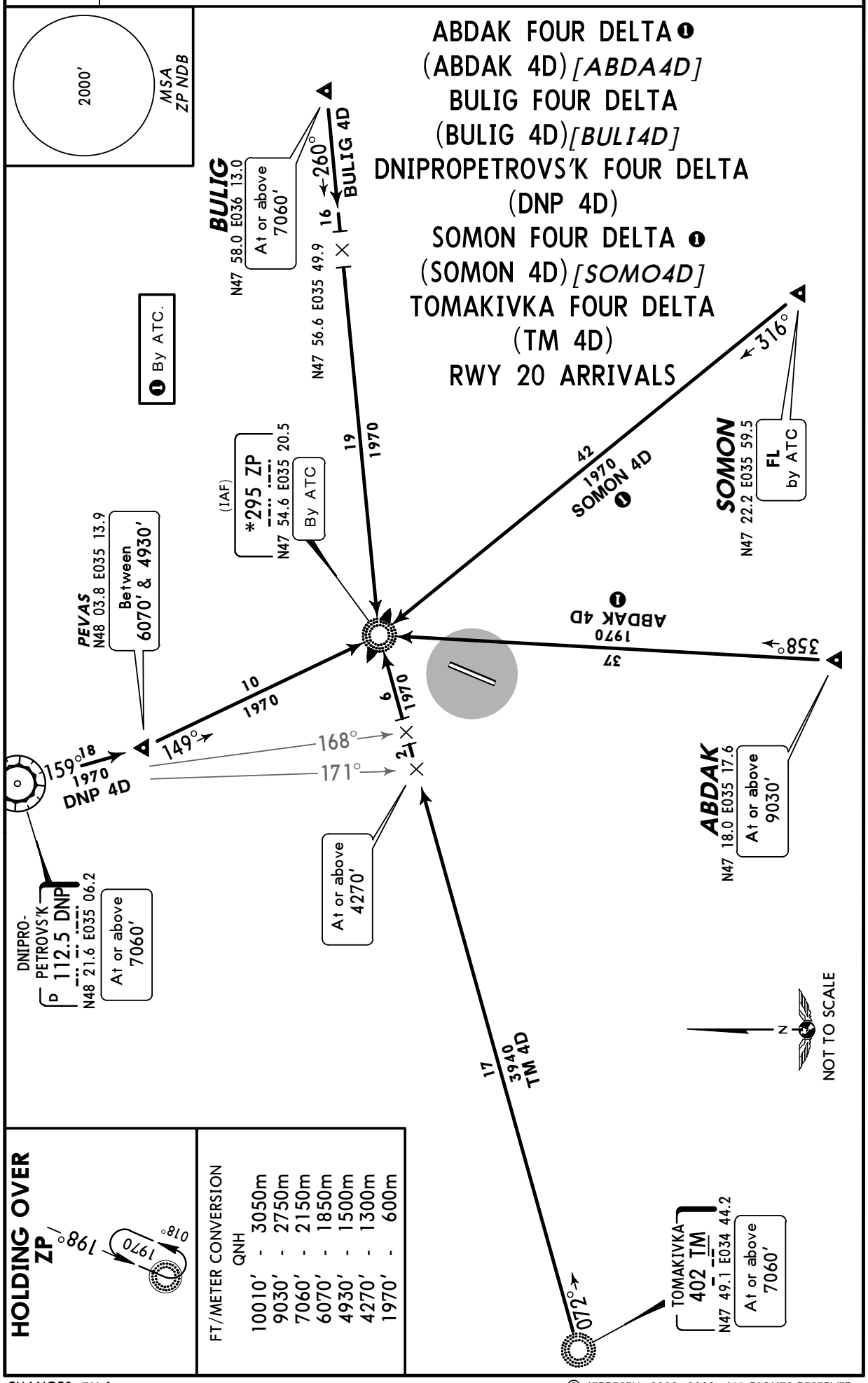

CHANGES: TM frequency.

© JEPPESEN, 2002, 2008. ALL RIGHTS RESERVED.

Licensed to npan. Printed on 06 Sep 2010.
NOTICE: PRINTED FROM AN EXPIRED REVISION. Disc 16-2010

JEPPESEN
JeppView 3.7.0.2

UKDE/OZH
MOKRAYA

JEPPESEN
19 DEC 08 (10-2B)

ZAPORIZHZHIA, UKRAINE
RADAR STAR

Apt Elev	
373′	Alt Set: hPa (MM on request) Trans level: By ATC Trans alt: 10010′

RWY 02 RADAR VECTORING ARRIVALS
BY ATC

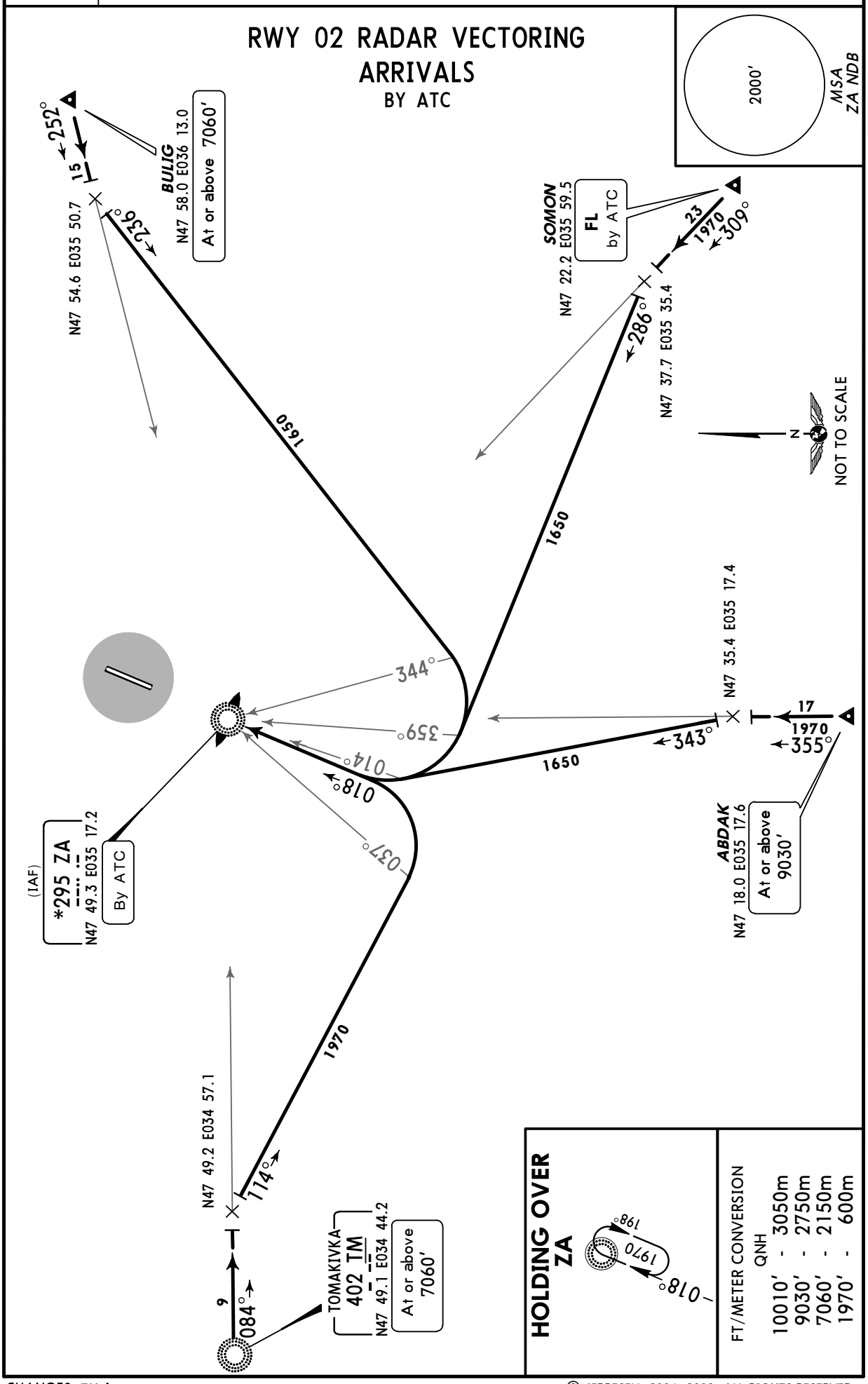

CHANGES: TM frequency.

© JEPPESEN, 2004, 2008. ALL RIGHTS RESERVED.

Licensed to npan. Printed on 06 Sep 2010.
NOTICE: PRINTED FROM AN EXPIRED REVISION. Disc 16-2010

JEPPESEN
JeppView 3.7.0.2

UKDE/OZH
MOKRAYA

JEPPESEN
19 DEC 08 (10-2C)

ZAPORIZHZHIA, UKRAINE
RADAR STAR

Apt Elev	
373′	Alt Set: hPa (MM on request) Trans level: By ATC Trans alt: 10010′

RWY 20 RADAR VECTORING ARRIVALS
BY ATC

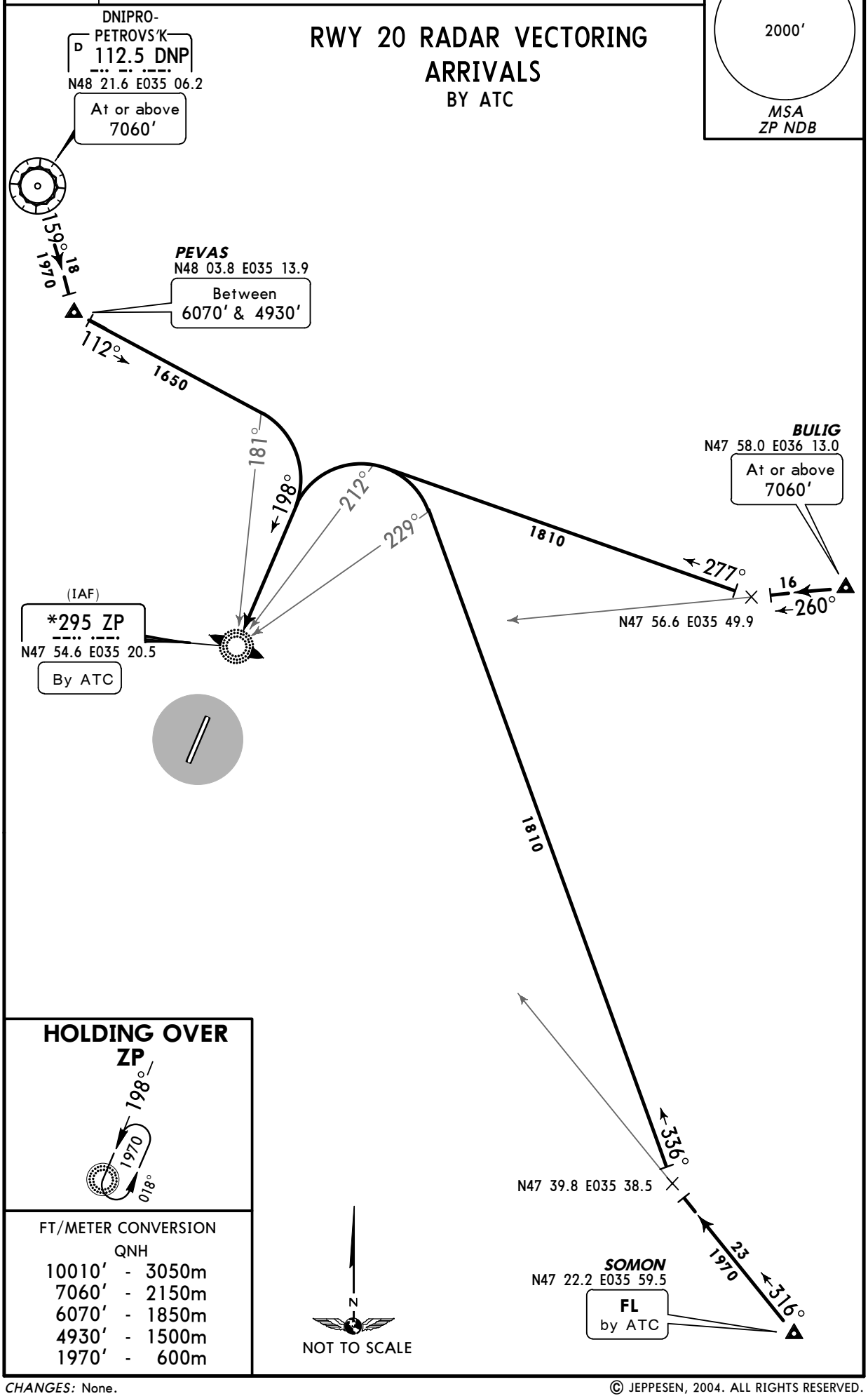

HOLDING OVER ZP

FT/METER CONVERSION
QNH

10010′	-	3050m
7060′	-	2150m
6070′	-	1850m
4930′	-	1500m
1970′	-	600m

CHANGES: None.

© JEPPESEN, 2004. ALL RIGHTS RESERVED.

Licensed to npan. Printed on 06 Sep 2010.
NOTICE: PRINTED FROM AN EXPIRED REVISION. Disc 16-2010

UKDE/OZH MOKRAYA

ZAPORIZHZHIA, UKRAINE

SID

Apt Elev	
373′	Trans level: By ATC Trans alt: 10010′

BULIG FOUR ALFA (BULIG 4A) *[BULI4A]*
BULIG FOUR BRAVO (BULIG 4B) *[BULI4B]*
BULIG FOUR ECHO (BULIG 4E) *[BULI4E]*
DNIPROPETROVS′K FOUR ALFA (DNP 4A)
DNIPROPETROVS′K FOUR BRAVO (DNP 4B)
RWYS 02, 20 DEPARTURES
TO NORTH & EAST

SID	RWY	ROUTING
BULIG 4A	02	Climb on 018° track to 990′, turn RIGHT, 090° track, at DNP R-136 turn LEFT, intercept 077° bearing from TM to BULIG.
BULIG 4B	20	Climb on 198° track to 1650′, turn LEFT, 018° track, at 275° bearing to ZP turn RIGHT, intercept 079° bearing from ZP to BULIG.
BULIG 4E By ATC		Climb on 198° track to 1650′, turn LEFT, 065° track to BULIG.
DNP 4A	02	Climb on 018° track to 990′, turn LEFT, 327° track to PEVAS, turn RIGHT, 339° track to DNP.
DNP 4B	20	Climb on 198° track to 1650′, turn LEFT, intercept 339° bearing to ZP, turn LEFT, 329° bearing to PEVAS, turn RIGHT, 339° track to DNP.

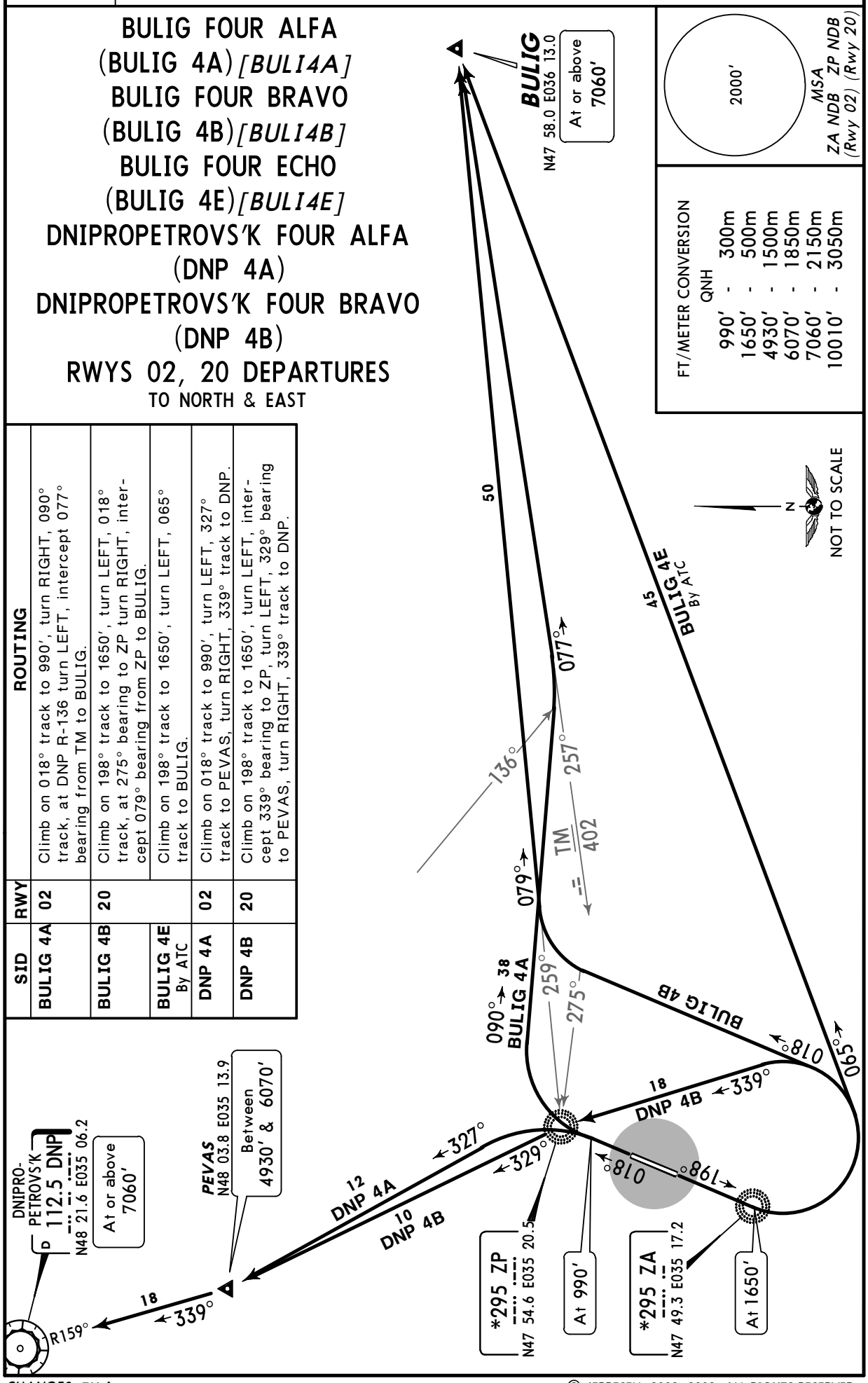

CHANGES: TM frequency.

© JEPPESEN, 2002, 2008. ALL RIGHTS RESERVED.

Licensed to пран. Printed on 06 Sep 2010.
NOTICE: PRINTED FROM AN EXPIRED REVISION. Disc 16-2010

JEPPESEN
JeppView 3.7.0.2

UKDE/OZH
MOKRAYA

JEPPESEN 19 DEC 08 (10-3A)

ZAPORIZHZHIA, UKRAINE
SID

Apt Elev 373′

Trans level: By ATC Trans alt: 10010′

SOMON FOUR ALFA (SOMON 4A) [SOMO4A]
SOMON FOUR BRAVO (SOMON 4B) [SOMO4B]
SOMON FOUR ECHO (SOMON 4E) [SOMO4E]
TOMAKIVKA FOUR ALFA (TM 4A)
TOMAKIVKA FOUR BRAVO (TM 4B)
RWYS 02, 20 DEPARTURES
TO SOUTHEAST & WEST

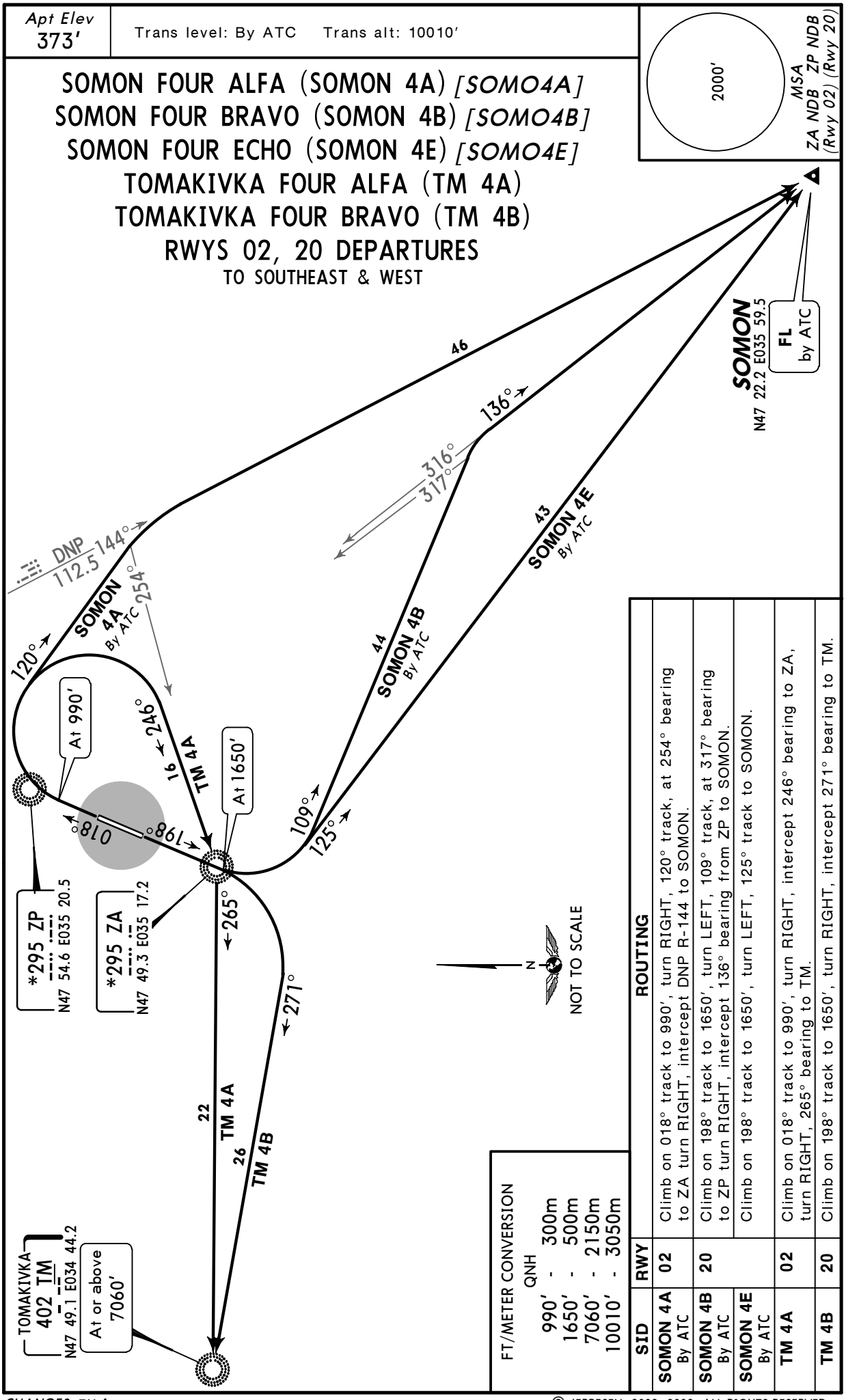

FT/METER CONVERSION
QNH

990′	300m
1650′	500m
7060′	2150m
10010′	3050m

SID	RWY	ROUTING
SOMON 4A By ATC	02	Climb on 018° track to 990′, turn RIGHT, 120° track, at 254° bearing to ZA turn RIGHT, intercept DNP R-144 to SOMON.
SOMON 4B By ATC	20	Climb on 198° track to 1650′, turn LEFT, 109° track, at 317° bearing to ZP turn RIGHT, intercept 136° bearing from ZP to SOMON.
SOMON 4E By ATC		Climb on 198° track to 1650′, turn LEFT, 125° track to SOMON.
TM 4A	02	Climb on 018° track to 990′, turn RIGHT, intercept 246° bearing to ZA, turn RIGHT, 265° bearing to TM.
TM 4B	20	Climb on 198° track to 1650′, turn RIGHT, intercept 271° bearing to TM.

CHANGES: TM frequency.

© JEPPESEN, 2002, 2008. ALL RIGHTS RESERVED.

Licensed to npan. Printed on 06 Sep 2010.
NOTICE: PRINTED FROM AN EXPIRED REVISION. Disc 16-2010

UKDE/OZH

Apt Elev **373′**
N47 52.0 E035 18.9

JEPPESEN **ZAPORIZHZHIA, UKRAINE**
MOKRAYA

28 MAR 08 (10-9) **Eff 10 Apr**

ZAPORIZHZHIA Tower
118.2

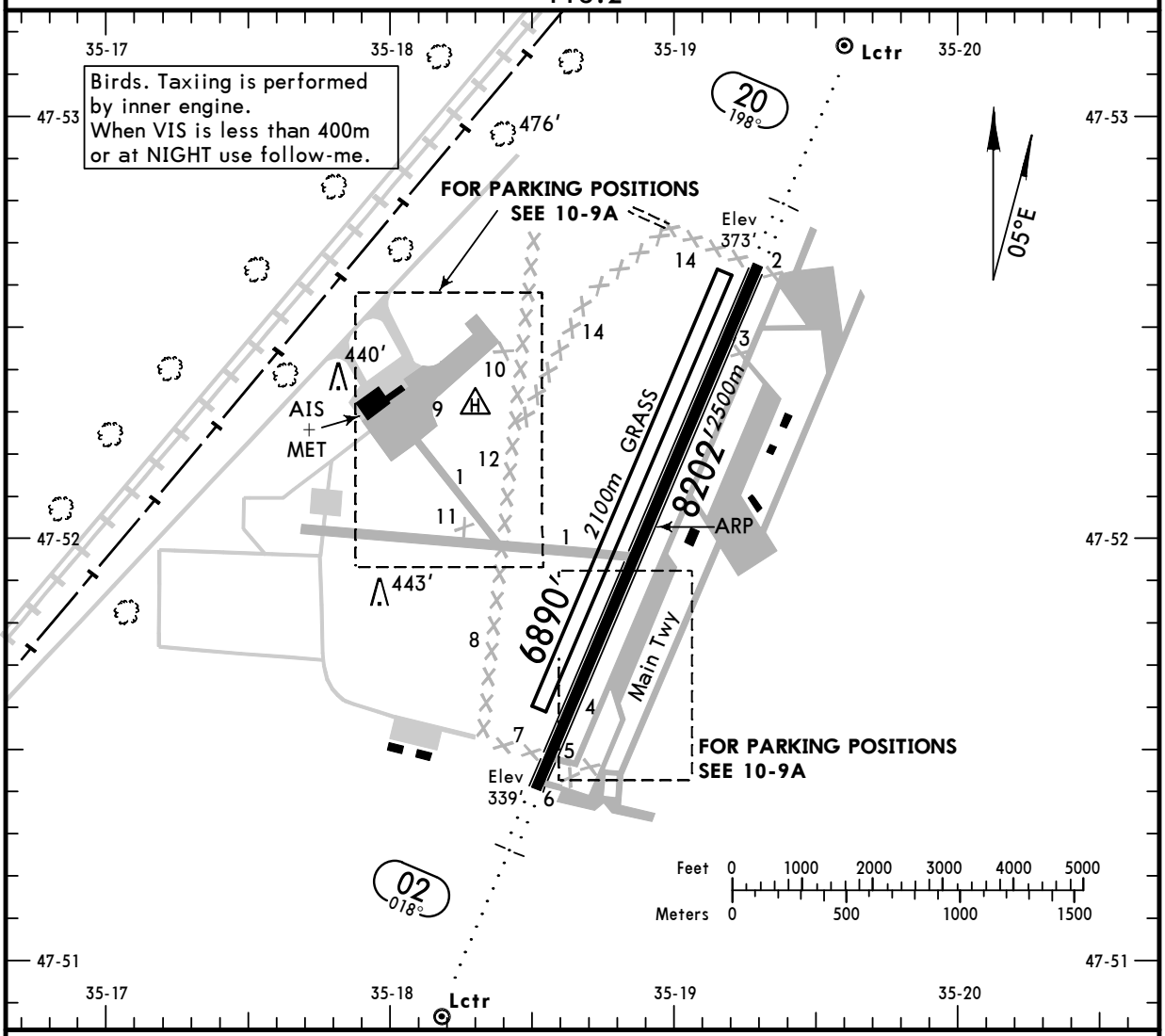

ADDITIONAL RUNWAY INFORMATION

RWY		USABLE LENGTHS — LANDING BEYOND — Threshold	Glide Slope	TAKE-OFF	WIDTH
02 20	RL *(100m)* ALS RVR		7170′ *2185m* 6987′ *2130m*		138′ *42m*
02 20	Grass runway				279′ *85m*

JAR-OPS

TAKE-OFF [1]

Main rwy 02/20

	LVP must be in force RCLM (DAY only) or RL	RCLM (DAY only) or RL	NIL (DAY only)
A	*250m*	*400m*	*500m*
B			
C			
D	*300m*		

[1] Operators applying U.S. Ops Specs: CL required below 300m.

CHANGES: Notes. Landing beyond GS. Minimums.

© JEPPESEN, 1998, 2008. ALL RIGHTS RESERVED.

Licensed to πραπ. Printed on 06 Sep 2010.
NOTICE: PRINTED FROM AN EXPIRED REVISION. Disc 16-2010

UKDE/OZH

JEPPESEN ZAPORIZHZHIA, UKRAINE
MOKRAYA

28 MAR 08 (10-9A) Eff 10 Apr

NOT TO SCALE

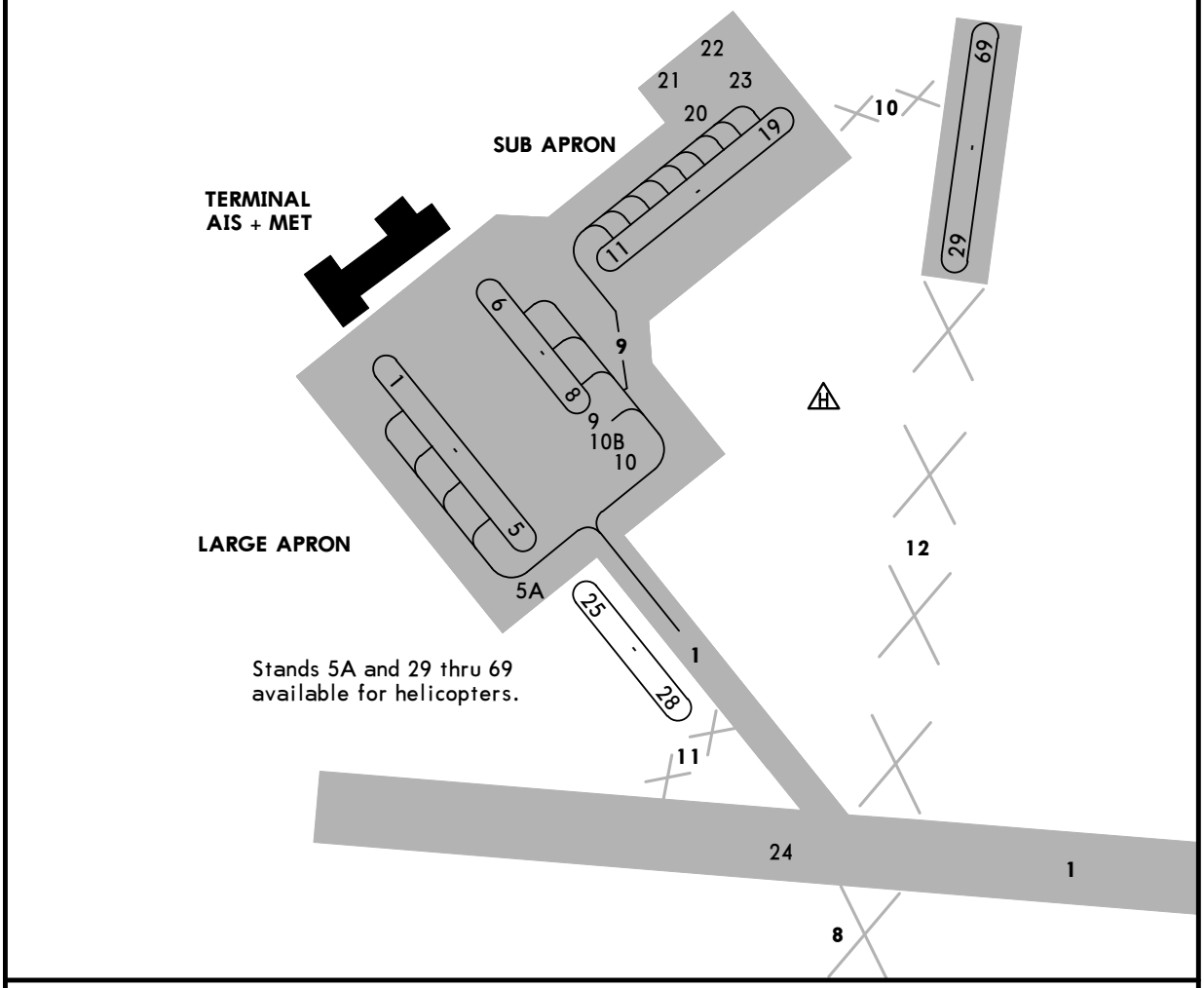

NOT TO SCALE

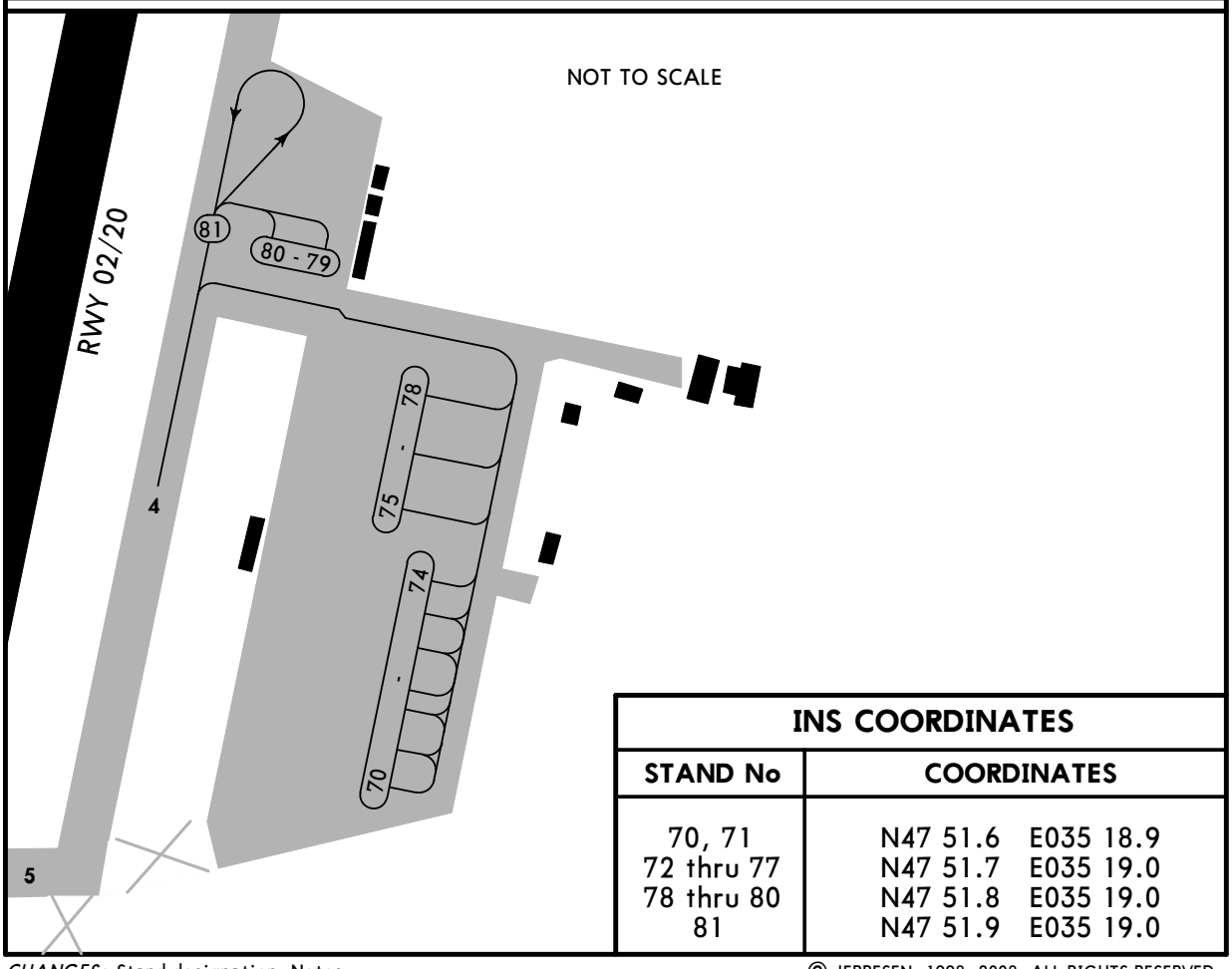

INS COORDINATES	
STAND No	COORDINATES
70, 71	N47 51.6 E035 18.9
72 thru 77	N47 51.7 E035 19.0
78 thru 80	N47 51.8 E035 19.0
81	N47 51.9 E035 19.0

CHANGES: Stand designation. Notes.

© JEPPESEN, 1998, 2008. ALL RIGHTS RESERVED.

Licensed to npan. Printed on 06 Sep 2010.
NOTICE: PRINTED FROM AN EXPIRED REVISION. Disc 16-2010

UKDE/OZH MOKRAYA

JEPPESEN 28 MAR 08 (11-1) Eff 10 Apr

ZAPORIZHZHIA, UKRAINE ILS or NDB Rwy 02

BRIEFING STRIP ™

ZAPORIZHZHIA Approach Radar	ZAPORIZHZHIA Tower
119.2	118.2

LOC IZA 110.3	Final Apch Crs 018°	GS LOM 1050′ (711′)	ILS DA(H) Refer to Minimums	Apt Elev 373′	2000′
NDB ZA *295		with LOM Minimum Alt LOM 1050′ (711′)	NDB (CONDITIONAL) MDA(H) 710′ (371′)	RWY 339′	MSA ZA NDB

MISSED APCH: Climb on 018° to 990′, then turn RIGHT onto 198° climbing to 1650′, then according to chart.

Alt Set: hPa (MM on req) | Rwy Elev: 12 hPa | Trans level: By ATC | Trans alt: 10010′

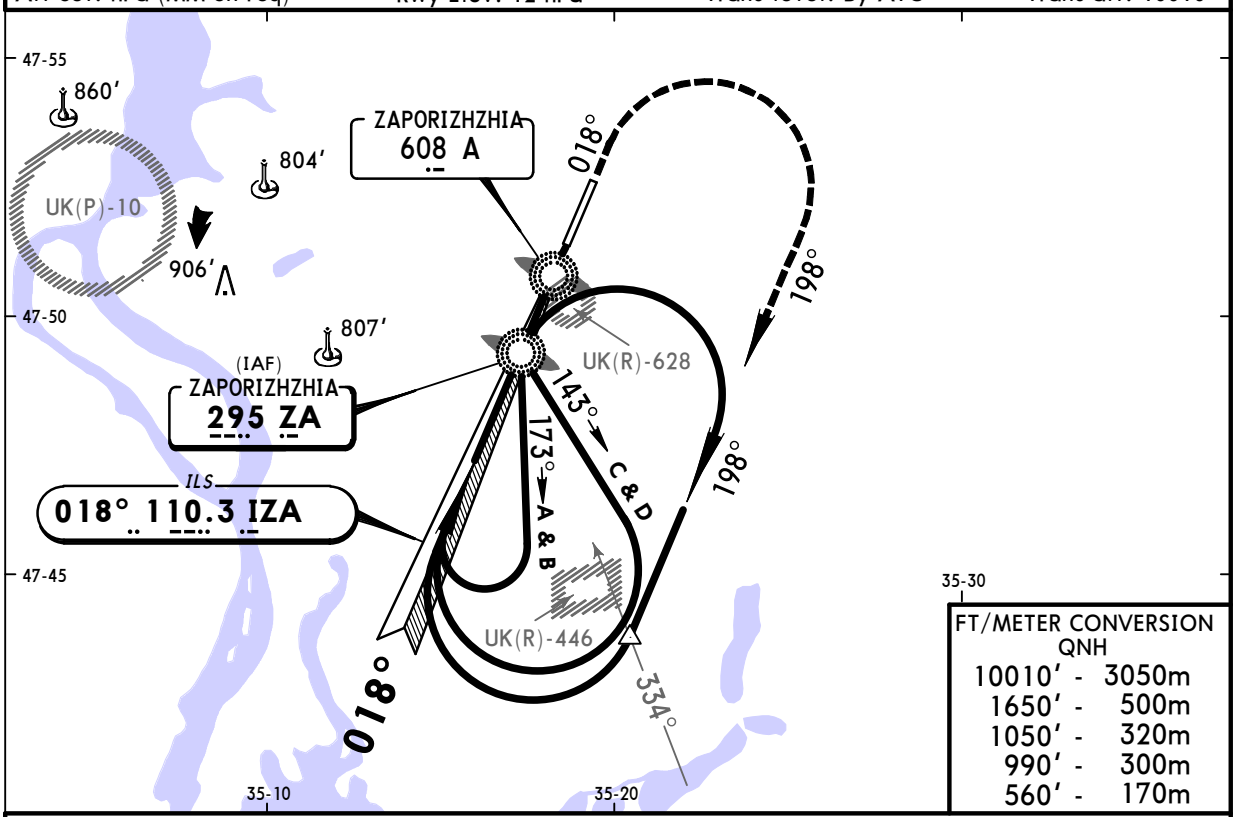

FT/METER CONVERSION QNH	
10010′ -	3050m
1650′ -	500m
1050′ -	320m
990′ -	300m
560′ -	170m

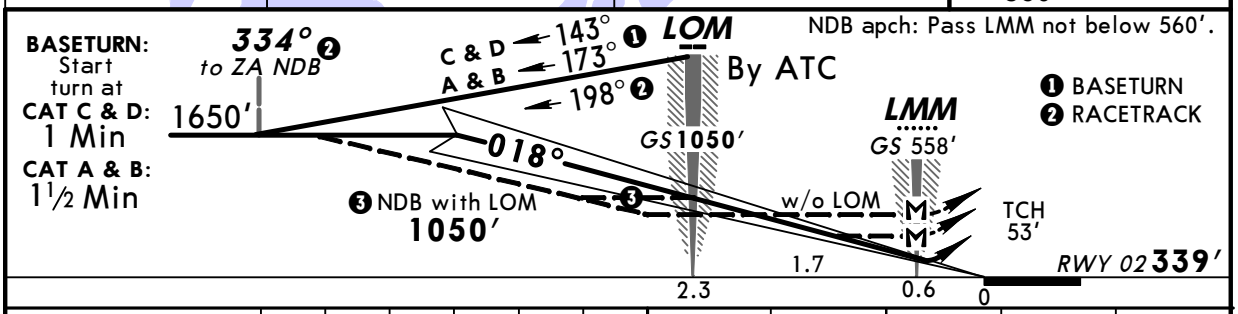

Gnd speed-Kts	70	90	100	120	140	160	ALS	990′ on 018°	198° RT	1650′
ILS GS 2.67° or NDB Descent Grad 4.7%	336	433	481	577	673	769				
MAP at LMM										

PANS OPS

JAR-OPS STRAIGHT-IN LANDING RWY 02 ❶

ILS DA(H) A:539′(200′) C:554′(215′) B:545′(206′) D:564′(225′)

NDB with LOM MDA(H) 710′(371′) | NDB w/o LOM MDA(H) 790′(451′)

	ILS FULL	ILS ALS out	NDB with LOM	NDB with LOM ALS out	NDB w/o LOM	NDB w/o LOM ALS out
A	800m	1000m	RVR 1300m	RVR 1500m	RVR 1500m	
B			RVR 1400m			
C			RVR 1600m	RVR 1800m	RVR 1800m	RVR 2000m
D			RVR 1800m	RVR 2000m	RVR 2000m	

CIRCLE-TO-LAND ❷

Max Kts	MDA(H)	VIS
100	780′(441′) ❸	1500m
135	880′(541′)	1600m
180	1120′(781′)	2400m
205	1140′(801′)	3600m

❶ LOC (GS out): NOT AUTHORIZED. ❷ Circling height based on rwy 02 thresh elev of 339′.
❸ After NDB apch: MDA(H) 790′ (451′).

CHANGES: Communications. Procedure. Minimums.

© JEPPESEN, 2004, 2008. ALL RIGHTS RESERVED.

Licensed to npan. Printed on 06 Sep 2010.
NOTICE: PRINTED FROM AN EXPIRED REVISION. Disc 16-2010

JEPPESEN
JeppView 3.7.0.2

UKDE/OZH MOKRAYA

JEPPESEN 28 MAR 08 (11-2) Eff 10 Apr

ZAPORIZHZHIA, UKRAINE ILS or NDB Rwy 20

BRIEFING STRIP ™

ZAPORIZHZHIA Approach Radar	ZAPORIZHZHIA Tower
119.2	118.2

LOC IZP 111.7	Final Apch Crs 198°	GS LOM 1033′ (660′)	ILS DA(H) 573′ (200′)	Apt Elev 373′	2000′
NDB ZP *295		with LOM Minimum Alt LOM 1040′ (667′)	NDB (CONDITIONAL) MDA(H) 730′ (357′)	RWY 373′	MSA ZP NDB

MISSED APCH: Climb on 198° to 990′, then turn LEFT onto 018° climbing to 1810′, then according to chart.

Alt Set: hPa (MM on req) | Rwy Elev: 14 hPa | Trans level: By ATC | Trans alt: 10010′

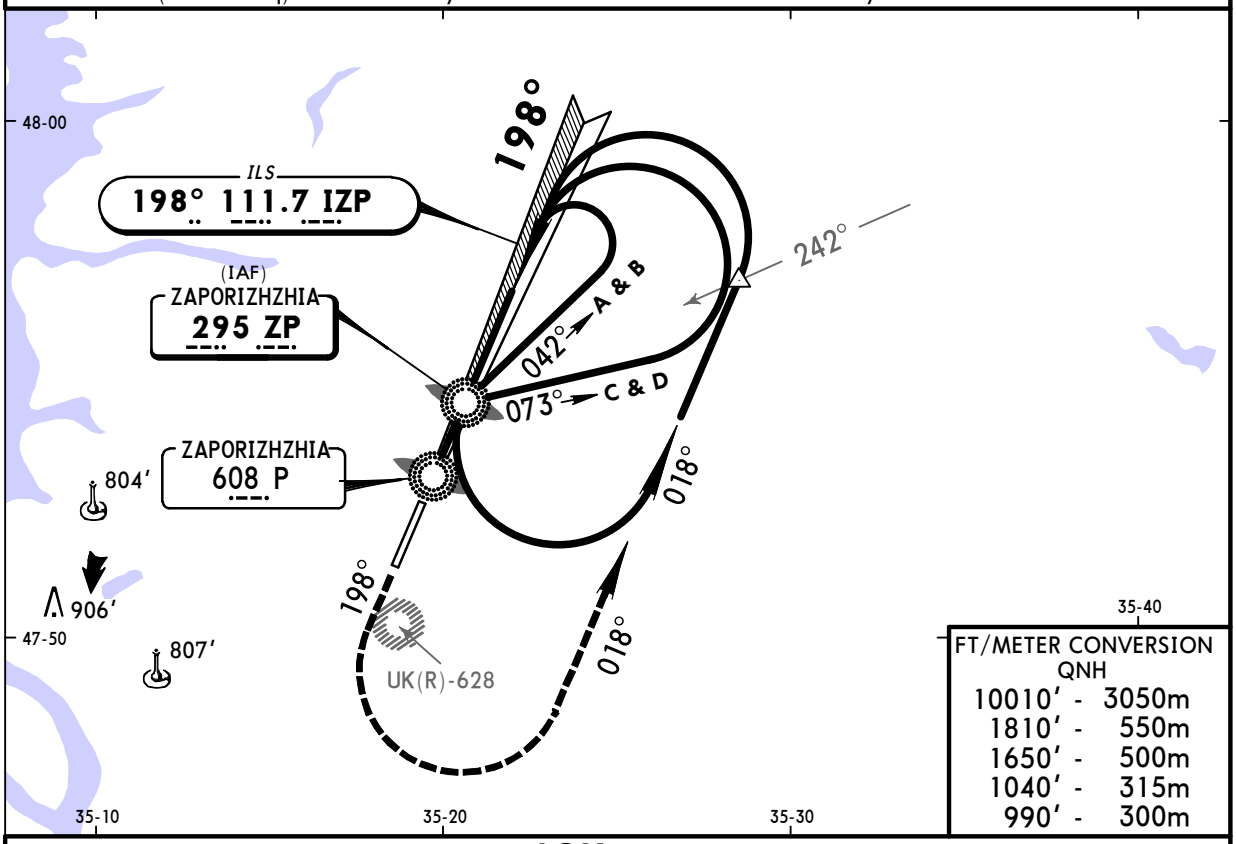

FT/METER CONVERSION QNH	
10010′ -	3050m
1810′ -	550m
1650′ -	500m
1040′ -	315m
990′ -	300m

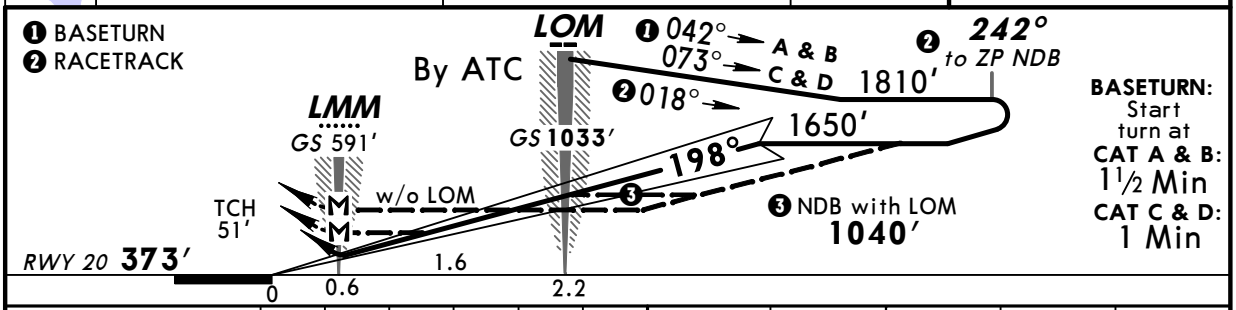

Gnd speed-Kts	70	90	100	120	140	160	ALS	990′ on 198°	018° LT	1810′
ILS GS 2.67° or NDB Descent Grad 4.7%	336	433	481	577	673	769				
MAP at LMM										

PANS OPS

JAR-OPS STRAIGHT-IN LANDING RWY 20 [1]

	ILS DA(H) 573′(200′) FULL	ILS DA(H) 573′(200′) ALS out	NDB with LOM MDA(H) 730′(357′)	NDB with LOM MDA(H) 730′(357′) ALS out	NDB w/o LOM MDA(H) 890′(517′)	NDB w/o LOM MDA(H) 890′(517′) ALS out
A	800m	1000m	RVR 1300m	RVR 1500m	RVR 1500m	
B			RVR 1400m			
C			RVR 1600m	RVR 1800m	RVR 1800m	RVR 2000m
D			RVR 1800m	RVR 2000m	RVR 2000m	

CIRCLE-TO-LAND

Max Kts	MDA(H)	VIS
100	780′(407′) [2]	1500m
135	880′(507′) [2]	1600m
180	1120′(747′)	2400m
205	1140′(767′)	3600m

[1] LOC (GS out): NOT AUTHORIZED. [2] After NDB apch: MDA(H) 890′ (517′).

CHANGES: Communications. Procedure. Minimums.

© JEPPESEN, 2004, 2008. ALL RIGHTS RESERVED.