General Info

Lanzhou, CHN
N 36?31.0' E103?37.3' Mag Var: 1.4癢
Elevation: 6388'

Public, Control Tower, IFR, Landing Fee, Customs
Fuel: Jet

Time Zone Info: GMT+8:00 no DST

Runway Info

Runway 18-36 11811' x 148' concrete

Runway 18 (180.0癰) TDZE 6388'
  Lights: Edge, ALS, Centerline
  Stopway Distance 197'
Runway 36 (360.0癰) TDZE 6329'
  Lights: Edge, ALS, Centerline
  Stopway Distance 197'

Communications Info

Lanzhou Tower **130.0** Secondary
Lanzhou Tower **118.1**

Notebook Info

Licensed to mengnan. Printed on 22 Sep 2007.
Notice: After 26 Oct 2007 0901Z, this chart may no longer be valid. Disc 20-2007

JEPPESEN
JeppView 3.5.2.0

ZLLL/ZGC
ZHONGCHUAN

JEPPESEN 14 MAY 04 10-2

LANZHOU, PR OF CHINA
STAR

Apt Elev 6388′

Alt Set: hPa
Trans level: FL157 Trans alt: 13780′
14770′ - QNH 1031 hPa or above
12800′ - QNH 979 hPa or below

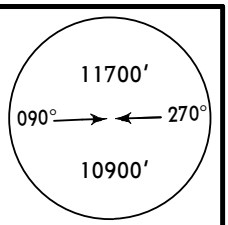

MSA
ZGC VOR

JIG 1A, JIG 2A, JTA 1A, JTA 2A
OMBON 1A [OMBO1A]
OMBON 2A [OMBO2A]
OMBON 3A [OMBO3A]
OMBON 4A [OMBO4A]
JIG 3A, JIG 4A
By ATC
RWY 18 ARRIVALS

D30 ZGC
At FL157

JINGTAI
D *114.9 JTA
N37 11.7 E104 04.8
*475 PT
N37 11.6 E104 04.1

210° 16 JTA 1A, 2A
13

(IAF)
D17 ZGC
N36 45.8 E103 47.4
At 10340′

D11.3 ZGC
For direct approach
At 9360′

JTA 1A
13 DME Arc
013°
023°
226°
R030°
180° 5
12 JTA 2A

11820
360°

(IAF)
LANZHOU
*237 KQ
N36 37.0 E103 37.0
At 10340′

N
NOT TO SCALE

FL CONVERSION

FL217	FL6600m
FL177	FL5400m
FL157	FL4800m

FT/METER CONVERSION
QNH

14770′	-	4500m
13780′	-	4200m
12800′	-	3900m
11820′	-	3600m
10340′	-	3150m
9360′	-	2850m

JIG 3A By ATC
OMBON 3A
R122°
R155°
25
32 JIG 1A OMBON 1A
19 JIG 4A By ATC OMBON 4A
28 JIG 2A OMBON 2A

(IAF)
LANZHOU
D *114.3 ZGC
N36 30.9 E103 37.5
At 10340′

XIXAN
N36 16.8
E104 07.5
At FL177

JINGNING
D *113.7 JIG
N35 31.7 E105 43.2
*162 QI
N35 31.4 E105 42.6

335° 341° 311°

ZHONGHE
*198 YM
N36 14.1 E103 48.0

18 10 90 JIG 1A, 2A
26 OMBON 3A, 4A
12 85 JIG 3A, 4A By ATC
302° 296°

N36 06.7 E104 08.0
JIG 3A, 4A
At FL177

320°

N35 54.8 E104 09.0
Above FL217

153 359°
OMBON
N33 21.4 E104 16.3

HOLDING OVER YM

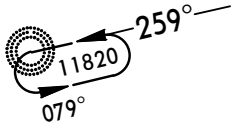

CHANGES: D28 ZGC named XIXAN.

© JEPPESEN SANDERSON, INC., 2003, 2004. ALL RIGHTS RESERVED.

Licensed to mengnan. Printed on 22 Sep 2007.
Notice: After 26 Oct 2007 0901Z, this chart may no longer be valid. Disc 20-2007

JEPPESEN
JeppView 3.5.2.0

ZLLL/ZGC ZHONGCHUAN

JEPPESEN

LANZHOU, PR OF CHINA

14 MAY 04 (10-2A)

STAR

Apt Elev 6388′	Alt Set: hPa Trans level: FL157 Trans alt: 13780′ 14770′ - QNH 1031 hPa or above 12800′ - QNH 979 hPa or below

11700′
090° 270°
10900′
MSA ZGC VOR

JIG 11A, JTA 11A, JTA 12A
OMBON 11A *[OMB11A]*
JIG 12A
By ATC
RWY 36 ARRIVALS

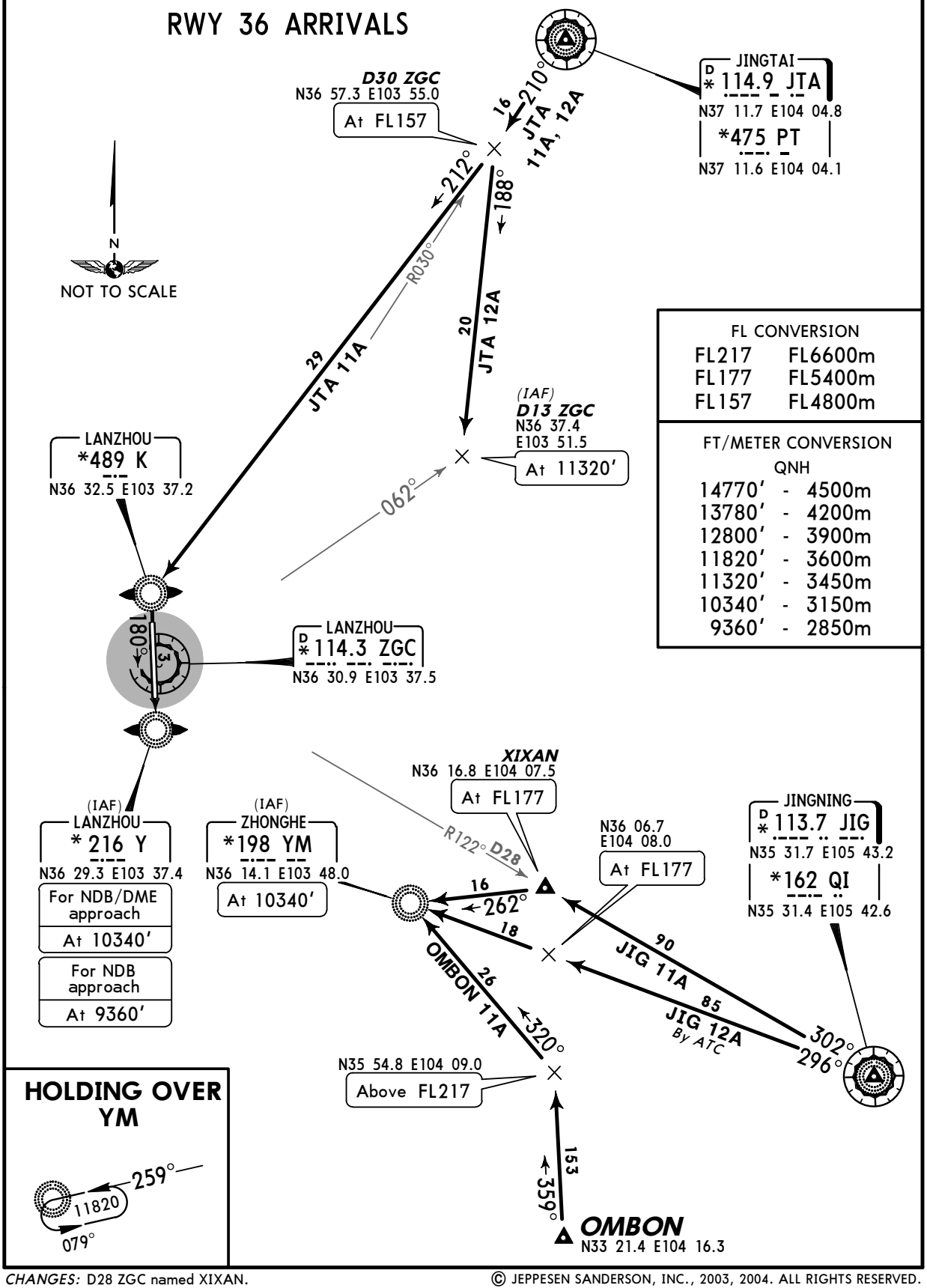

FL CONVERSION	
FL217	FL6600m
FL177	FL5400m
FL157	FL4800m

FT/METER CONVERSION QNH	
14770′	4500m
13780′	4200m
12800′	3900m
11820′	3600m
11320′	3450m
10340′	3150m
9360′	2850m

HOLDING OVER YM

CHANGES: D28 ZGC named XIXAN.

© JEPPESEN SANDERSON, INC., 2003, 2004. ALL RIGHTS RESERVED.

Licensed to mengnan. Printed on 22 Sep 2007.
Notice: After 26 Oct 2007 0901Z, this chart may no longer be valid. Disc 20-2007

ZLLL/ZGC ZHONGCHUAN

JEPPESEN LANZHOU, PR OF CHINA

14 MAY 04 (10-3)

SID

Apt Elev 6388′	Trans level: FL157 Trans alt: 13780′ 14770′ - QNH 1031 hPa or above 12800′ - QNH 979 hPa or below

MSA ZGC VOR: 11,700′ (090°–270°), 10,900′

JIG 1D, JTA 1D, OMBON 1D *[OMBO1D]*

JIG 2D
By ATC

RWY 18 DEPARTURES

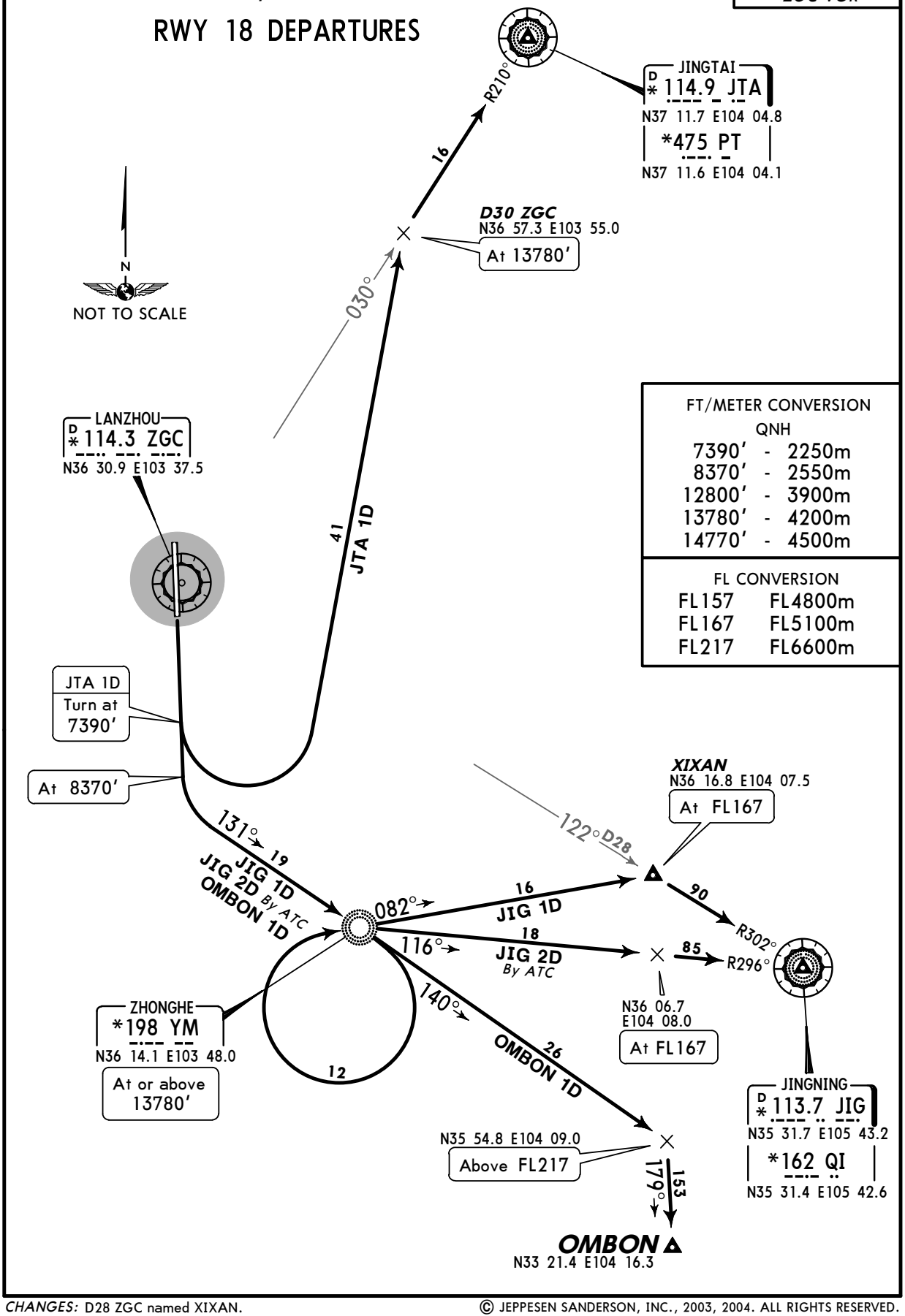

FT/METER CONVERSION		
QNH		
7390′	-	2250m
8370′	-	2550m
12800′	-	3900m
13780′	-	4200m
14770′	-	4500m

FL CONVERSION	
FL157	FL4800m
FL167	FL5100m
FL217	FL6600m

CHANGES: D28 ZGC named XIXAN.

© JEPPESEN SANDERSON, INC., 2003, 2004. ALL RIGHTS RESERVED.

Licensed to mengnan. Printed on 22 Sep 2007.
Notice: After 26 Oct 2007 0901Z, this chart may no longer be valid. Disc 20-2007

JEPPESEN
JeppView 3.5.2.0

ZLLL/ZGC ZHONGCHUAN

JEPPESEN

LANZHOU, PR OF CHINA

14 MAY 04 (10-3A)

SID

Apt Elev 6388′	Trans level: FL157 Trans alt: 13780′ 14770′ - QNH 1031 hPa or above 12800′ - QNH 979 hPa or below

11,700′
090° 270°
10,900′
MSA
ZGC VOR

JIG 11D, JIG 12D, JTA 11D
OMBON 11D *[OMB11D]*, OMBON 12D *[OMB12D]*
JIG 13D
By ATC

RWY 36 DEPARTURES

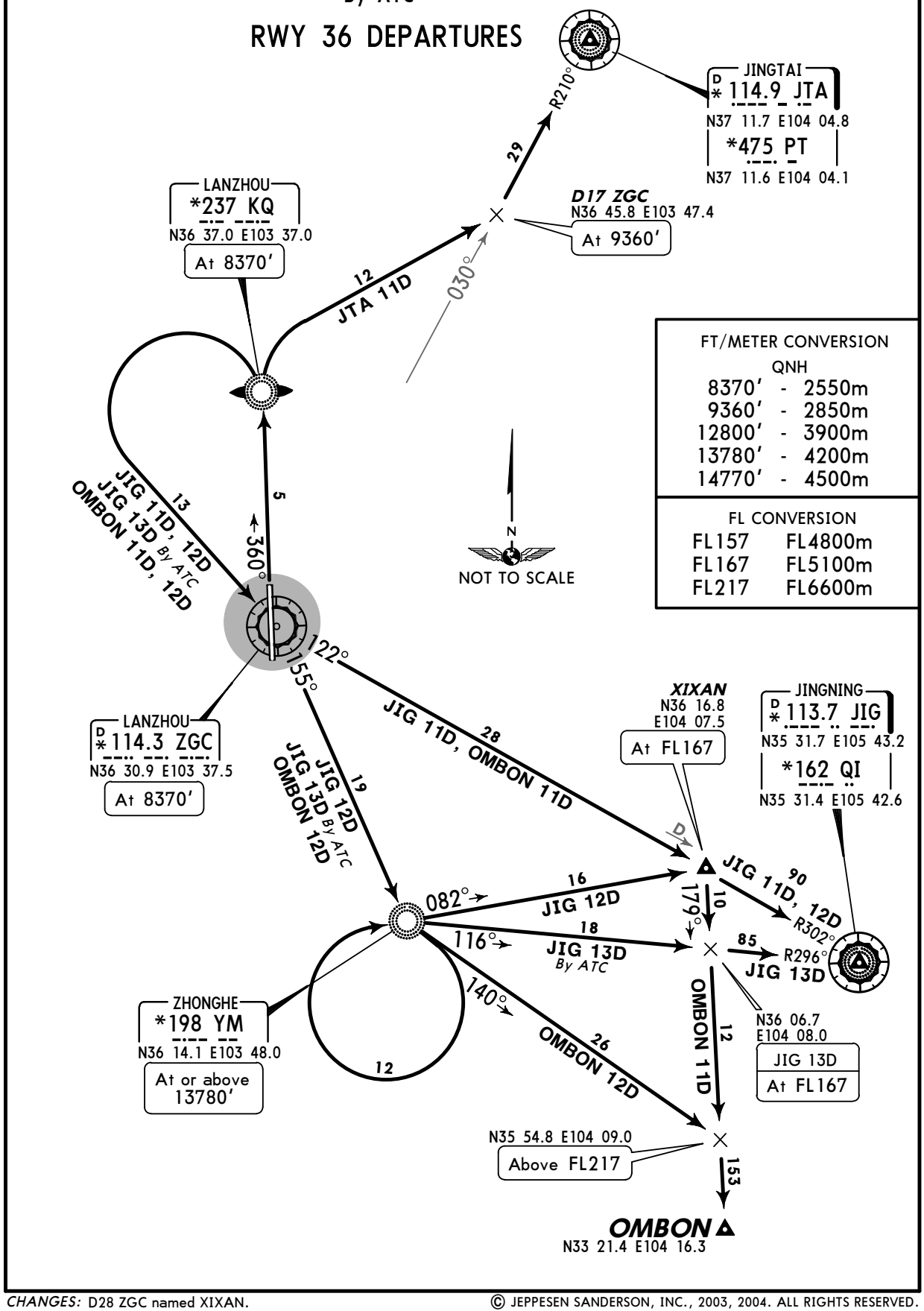

CHANGES: D28 ZGC named XIXAN.

© JEPPESEN SANDERSON, INC., 2003, 2004. ALL RIGHTS RESERVED.

Licensed to mengnan. Printed on 22 Sep 2007.
Notice: After 26 Oct 2007 0901Z, this chart may no longer be valid. Disc 20-2007

ZLLL/ZGC

Apt Elev **6388′**
ZGC 114.3 - On Airport

JEPPESEN 12 SEP 03 (10-9)

LANZHOU, PR OF CHINA

ZHONGCHUAN
N36 31.0 E103 37.3

*LANZHOU Tower
118.1

WARNING: Do not mistake road lights for rwy lights. Birds.

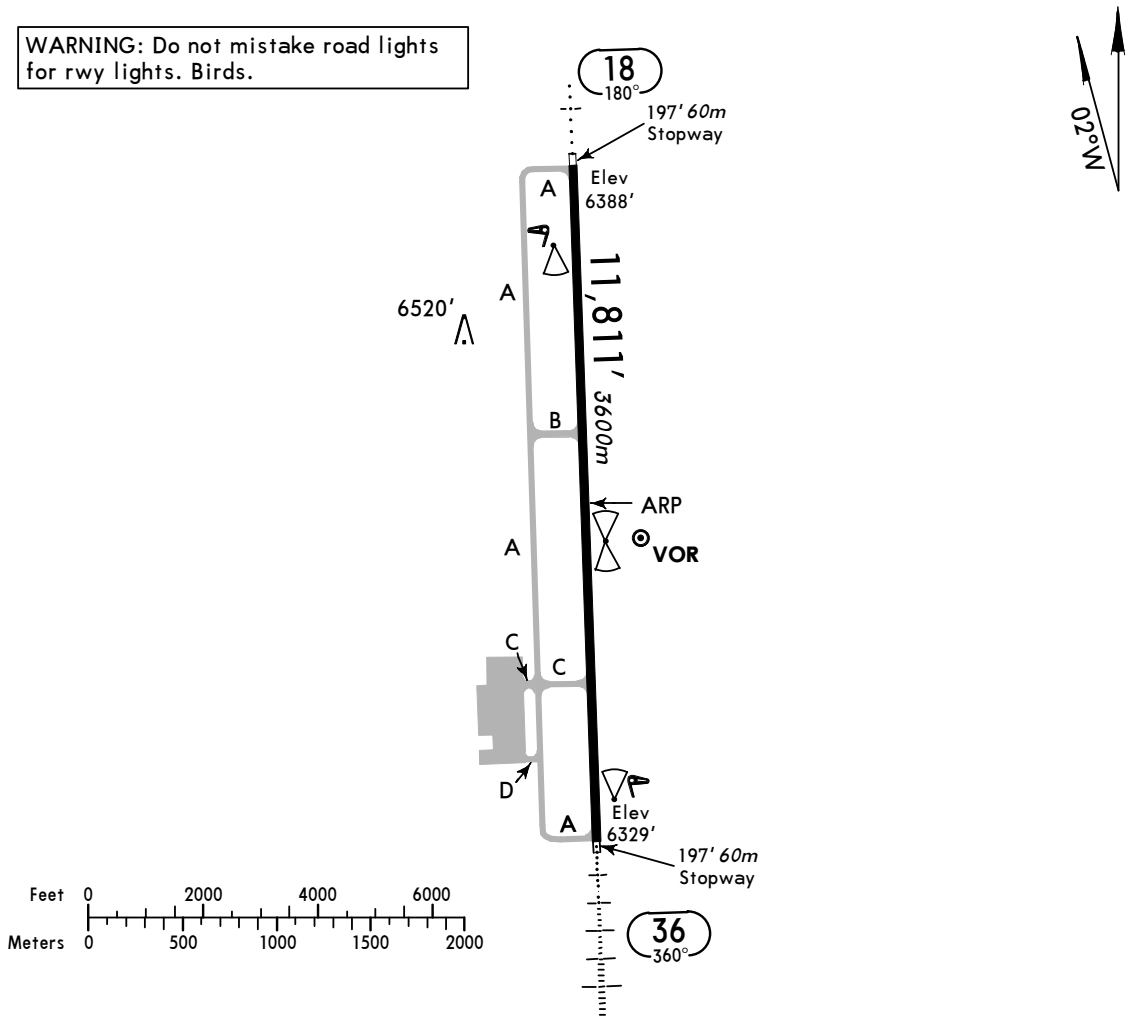

ADDITIONAL RUNWAY INFORMATION

RWY		USABLE LENGTHS — LANDING BEYOND — Threshold	Glide Slope	TAKE-OFF	WIDTH
18	MIRL *(60m)* CL *(30m)* MIALS PAPI-L(3.0°) RVR		10,745′ *3275m*		148′ *45m*
36	MIRL *(60m)* CL *(30m)* HIALS PAPI-L(3.0°) RVR		10,833′ *3317m*		

TAKE-OFF

	All Rwys	
	RL	NIL (Day only)
2 TURB Eng or 3 & 4 Eng	RVR *400m*	RVR *500m*
Other	VIS *1600m*	

CHANGES: Minimums.

© JEPPESEN SANDERSON, INC., 1999, 2003. ALL RIGHTS RESERVED.

Licensed to mengnan. Printed on 22 Sep 2007.
Notice: After 26 Oct 2007 0901Z, this chart may no longer be valid. Disc 20-2007

LANZHOU, PR OF CHINA
ZHONGCHUAN

STRAIGHT-IN RWY		A	B	C	D
18	ILS	**6588**′(200′)	**6588**′(200′)	**6588**′(200′)	**6588**′(200′)
		R700m	**R700m**	**R700m**	**R700m**
	ALS out	R1000m	R1000m	R1000m	R1000m
	LOC ❶	**6870**′(482′)	**6870**′(482′)	**6870**′(482′)	**6870**′(482′)
		R1400m	**R1500m**	**R1600m**	**R1800m**
	ALS out	R1500m	R1500m	R2000m	R2000m
	VOR DME	**6890**′(502′)	**6890**′(502′)	**6890**′(502′)	**6890**′(502′)
		R1400m	**R1500m**	**R1600m**	**R1800m**
	ALS out	R1500m	R1500m	R2000m	R2000m
	NDB DME	**6890**′(502′)	**6890**′(502′)	**6890**′(502′)	**6890**′(502′)
		R1400m	**R1500m**	**R1600m**	**R1800m**
	ALS out	R1500m	R1500m	R2000m	R2000m
	NDB	**7050**′(662′)	**7050**′(662′)	**7050**′(662′)	**7050**′(662′)
		R1500m	**R1500m**	**R1800m**	**R2000m**
	ALS out	R1500m	R1500m	R2000m	R2000m
36	ILS	**6529**′(200′)	**6529**′(200′)	**6529**′(200′)	**6529**′(200′)
		R550m	**R550m**	**R550m**	**R550m**
	ALS out	R1000m	R1000m	R1000m	R1000m
	LOC ❶	**6760**′(431′)	**6760**′(431′)	**6760**′(431′)	**6760**′(431′)
		R900m	**R1000m**	**R1000m**	**R1400m**
	ALS out	R1500m	R1500m	R1800m	R2000m
	VOR DME	**6820**′(491′)	**6820**′(491′)	**6820**′(491′)	**6820**′(491′)
		R1000m	**R1200m**	**R1200m**	**R1600m**
	ALS out	R1500m	R1500m	R2000m	R2000m
	NDB DME	**6820**′(491′)	**6820**′(491′)	**6820**′(491′)	**6820**′(491′)
		R1000m	**R1200m**	**R1200m**	**R1600m**
	ALS out	R1500m	R1500m	R2000m	R2000m
	NDB	**7090**′(761′)	**7090**′(761′)	**7090**′(761′)	**7090**′(761′)
		R1200m	**R1400m**	**R1400m**	**R1800m**
	ALS out	R1500m	R1500m	R2000m	R2000m

❶ LMM out: NOT AUTHORIZED.

CIRCLE-TO-LAND	100 KT	135 KT	180 KT	205 KT
Not authorized West of rwy	**7150**′(762′)	**7150**′(762′)	**7250**′(862′)	**7250**′(862′)
	V1500m	V1600m	V2400m	V3600m

TAKE-OFF RWY 18, 36

	RL	NIL (DAY only)
2 TURB Eng or 3 & 4 Eng	RVR *400m*	RVR *500m*
Other	VIS *1600m*	

© JEPPESEN SANDERSON, INC., 2003. ALL RIGHTS RESERVED.

Licensed to mengnan. Printed on 22 Sep 2007.
Notice: After 26 Oct 2007 0901Z, this chart may no longer be valid. Disc 20-2007

JEPPESEN
JeppView 3.5.2.0

ZLLL/ZGC ZHONGCHUAN

JEPPESEN 21 FEB 03 (11-1)

LANZHOU, PR OF CHINA ILS DME Rwy 18

BRIEFING STRIP ™

*LANZHOU Tower
118.1

LOC IKQ	Final Apch Crs	Minimum Alt LOM	ILS DA(H)	Apt Elev 6388′
*108.5	180°	8040′	6588′ (200′)	RWY 6388′

MISSED APCH: Climb STRAIGHT AHEAD to 7390′, then turn LEFT to reach KQ NDB at 9350′.

Alt Set: hPa Rwy Elev: 213 hPa Trans level: FL 157 Trans alt: 13780′ ❶

MSA ZGC VOR: 090° 11,700′; 270° 10,900′

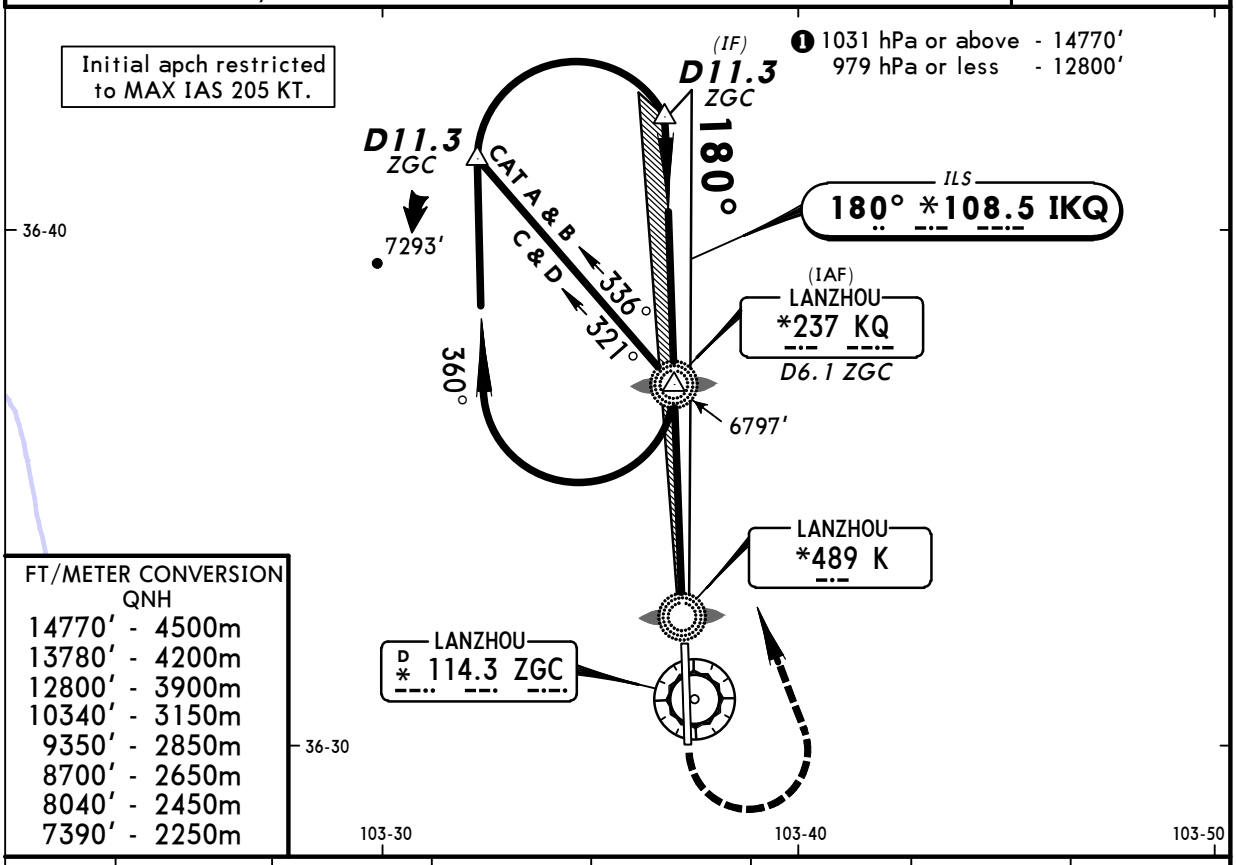

FT/METER CONVERSION
QNH

14770′	4500m
13780′	4200m
12800′	3900m
10340′	3150m
9350′	2850m
8700′	2650m
8040′	2450m
7390′	2250m

LOC (GS out)	ZGC DME	7.0	6.0	5.0	4.0	3.0	2.0
	ALTITUDE	8320′	8000′	7680′	7370′	7050′	6730′

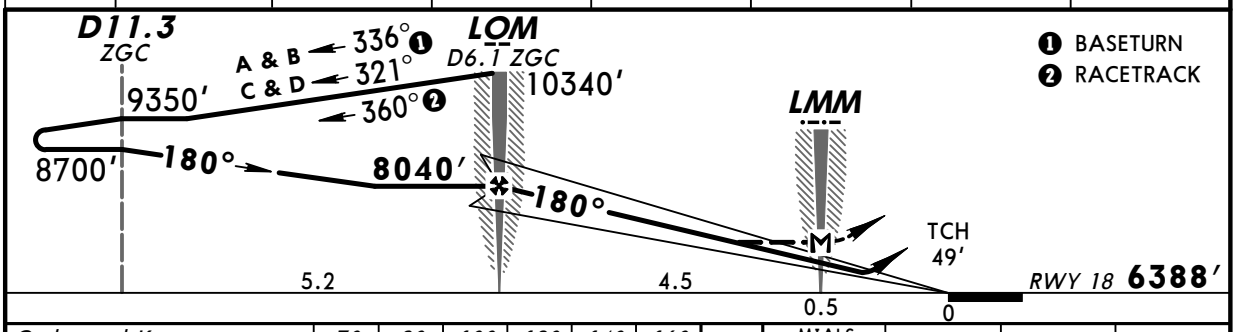

Gnd speed-Kts	70	90	100	120	140	160
ILS GS 3.00° or LOC Descent Gradient 5.2%	377	485	539	647	755	862
MAP at LMM						

MIALS PAPI 7390′ 9350′ LT KQ 237

STRAIGHT-IN LANDING RWY 18

	ILS DA(H) 6588′ (200′) FULL	ILS DA(H) 6588′ (200′) ALS out	LOC (GS out) MDA(H) 6870′ (482′)	LMM out	ALS out
A	1200m		1200m	NOT AUTH	RVR 1500m VIS 1600m
B					
C			2000m		2000m
D			2400m		2400m

CIRCLE-TO-LAND
Not authorized West of runway

Max Kts.	MDA(H)	
100	7150′ (762′)	1600m
135	7150′ (762′)	2000m
180	7250′ (862′)	4000m
205	7250′ (862′)	4400m

PANS OPS 4

CHANGES: New procedure.

© JEPPESEN SANDERSON, INC., 2003. ALL RIGHTS RESERVED.

Licensed to mengnan. Printed on 22 Sep 2007.
Notice: After 26 Oct 2007 0901Z, this chart may no longer be valid. Disc 20-2007

JEPPESEN
JeppView 3.5.2.0

ZLLL/ZGC ZHONGCHUAN

JEPPESEN 21 FEB 03 (11-2)

LANZHOU, PR OF CHINA
ILS DME Rwy 36

BRIEFING STRIP ™

*LANZHOU Tower 118.1

LOC IYY	Final Apch Crs	Minimum Alt D7.2 IYY	ILS DA(H)	Apt Elev 6388′
*109.3	360°	8630′	6529′ (200′)	RWY 6329′

MISSED APCH: Climb STRAIGHT AHEAD to 7390′, then turn RIGHT to reach Y Lctr at 9350′ and contact ATC.

Alt Set: hPa Rwy Elev: 211 hPa Trans level: FL 157 Trans alt: 13780′ ❶

MSA ZGC VOR: 11,700′ (090°–270°), 10,900′

FT/METER CONVERSION
QNH
14770′ - 4500m
13780′ - 4200m
12800′ - 3900m
10340′ - 3150m
9350′ - 2850m
9030′ - 2750m
8700′ - 2650m
8630′ - 2630m
7390′ - 2250m

❶ 1031 hPa or above - 14770′
979 hPa or less - 12800′

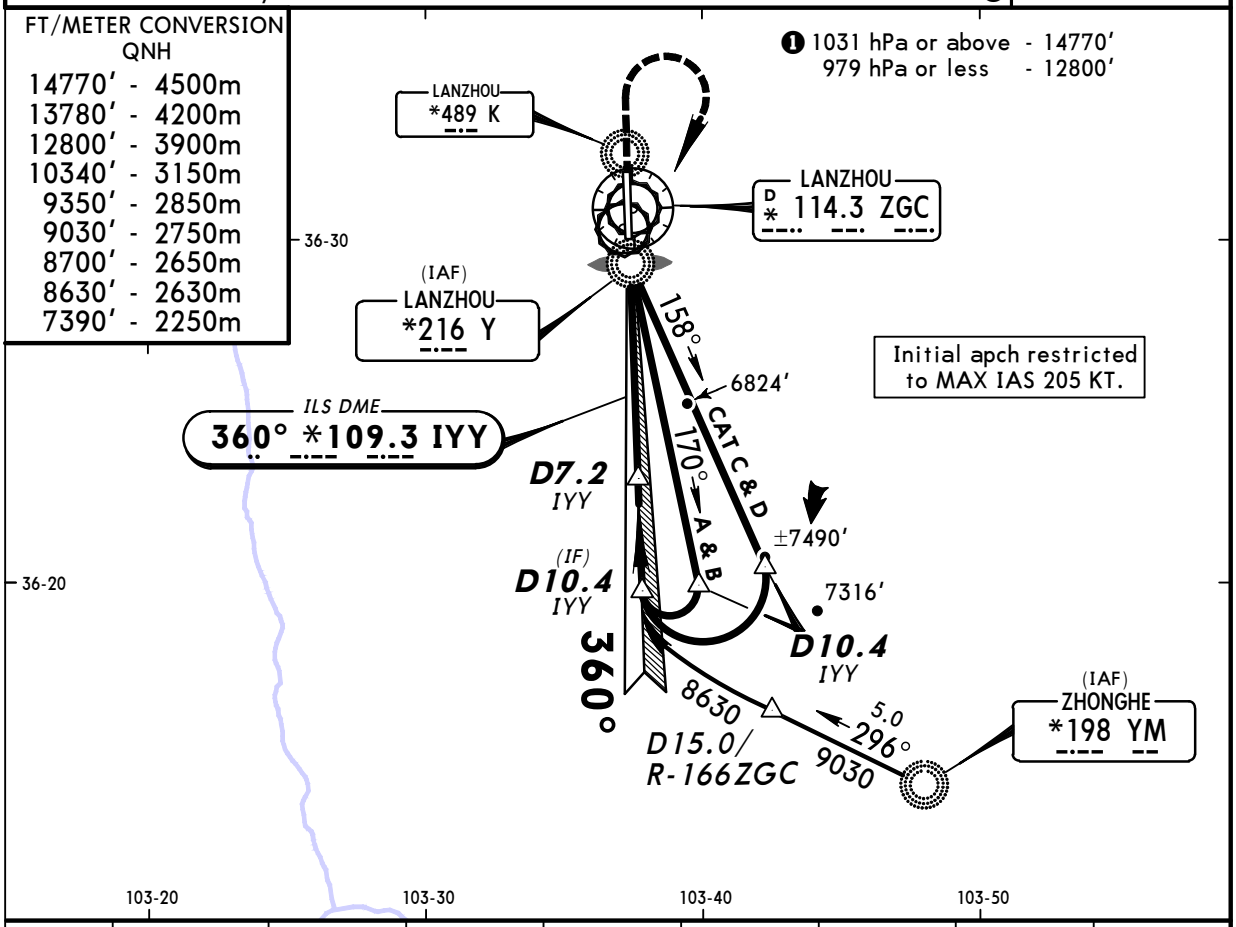

LOC (GS out)	IYY DME	1.0	2.0	3.0	4.0	5.0	6.0	7.0
	ALTITUDE	6650′	6970′	7290′	7610′	7920′	8240′	8560′

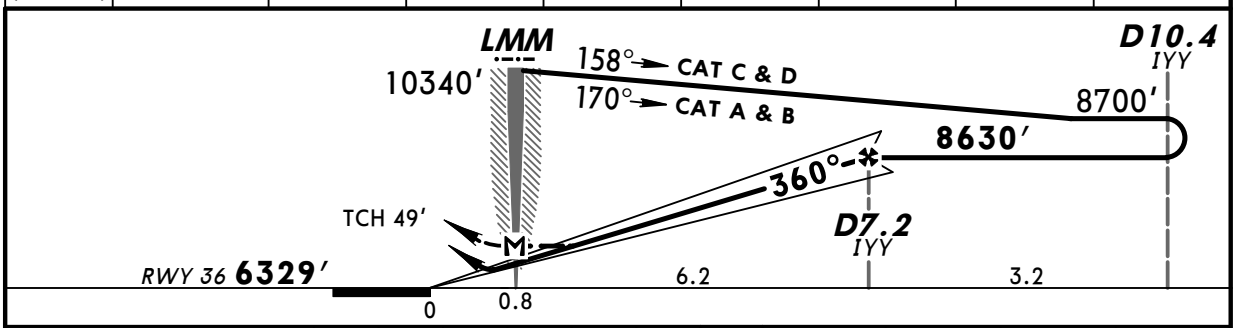

Gnd speed-Kts	70	90	100	120	140	160
ILS GS 3.00° or LOC Descent Gradient 5.2%	377	485	539	647	755	862
MAP at LMM						

HIALS PAPI

7390′ ↑ | 9350′ ↱ RT | Y 216

PANS OPS 4

STRAIGHT-IN LANDING RWY 36

	ILS DA(H) 6529′ (200′) FULL	ILS DA(H) 6529′ (200′) ALS out	LOC (GS out) MDA(H) 6760′ (431′)	LOC (GS out) LMM out	LOC (GS out) ALS out
A	RVR 720m VIS 800m	1200m	RVR 720m VIS 800m	NOT AUTH	RVR 1500m VIS 1600m
B					
C			1200m		2000m
D			RVR 1500m VIS 1600m		2400m

CIRCLE-TO-LAND
Not authorized West of runway

Max Kts	MDA(H)	
100	7150′ (762′)	1600m
135	7150′ (762′)	2000m
180	7250′ (862′)	4000m
205	7250′ (862′)	4400m

CHANGES: Chart reindexed. Minimums.

© JEPPESEN SANDERSON, INC., 1999, 2003. ALL RIGHTS RESERVED.

Licensed to mengnan. Printed on 22 Sep 2007.
Notice: After 26 Oct 2007 0901Z, this chart may no longer be valid. Disc 20-2007

ZLLL/ZGC ZHONGCHUAN

JEPPESEN 21 FEB 03 (13-1)

LANZHOU, PR OF CHINA VOR DME Rwy 18

BRIEFING STRIP ™

*LANZHOU Tower 118.1

VOR ZGC	Final Apch Crs	Minimum Alt D6.1	MDA(H)	Apt Elev / RWY
*114.3	175°	7880′	6890′ (502′)	Apt Elev 6388′ / RWY 6388′

MISSED APCH: Climb STRAIGHT AHEAD to 7390′, then turn LEFT to reach VOR at 9350′ and contact ATC.

Alt Set: hPa Rwy Elev: 213 hPa Trans level: FL 157 Trans alt: 13780′ ❶

11,700′ 090° 270° 10,900′
MSA ZGC VOR

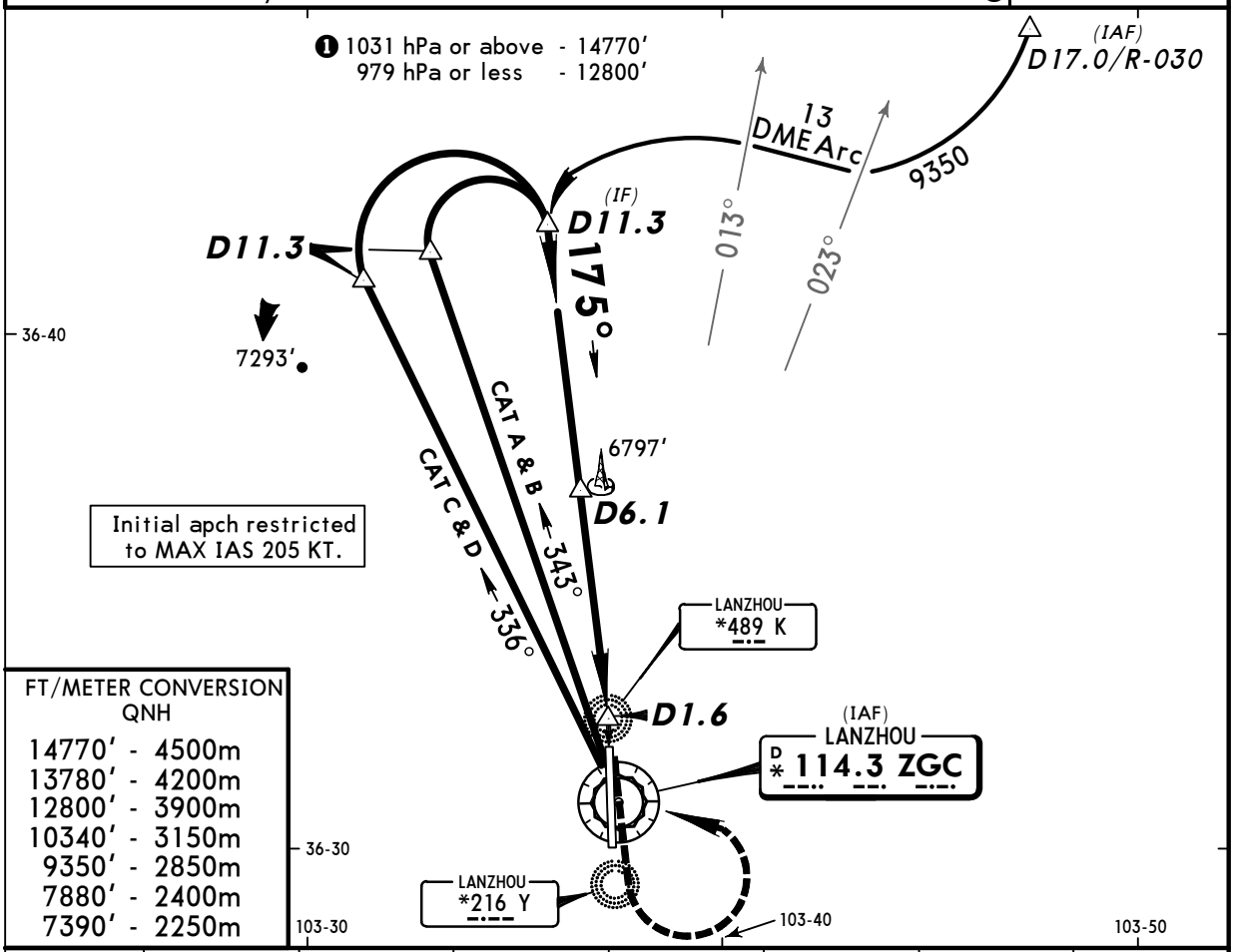

FT/METER CONVERSION
QNH

14770′	4500m
13780′	4200m
12800′	3900m
10340′	3150m
9350′	2850m
7880′	2400m
7390′	2250m

ZGC DME	8.0	7.0	6.0	5.0	4.0	3.0	2.0
ALTITUDE	8420′	8130′	7850′	7560′	7270′	6990′	6700′

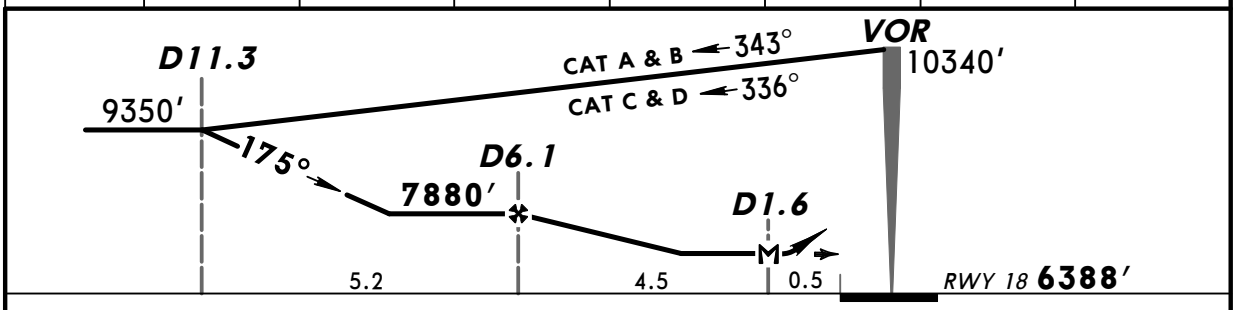

Gnd speed-Kts	70	90	100	120	140	160
Descent Gradient 4.7%	333	428	476	571	666	762
MAP at D1.6						

MIALS PAPI | 7390′ | 9350′ LT | ZGC 114.3

STRAIGHT-IN LANDING RWY 18

MDA(H) 6890′ (502′)

		ALS out
A	1200m	RVR 1500m VIS 1600m
B		
C	2400m	
D		

CIRCLE-TO-LAND

Not authorized West of runway

Max Kts	MDA(H)	
100	7150′ (762′)	1600m
135	7150′ (762′)	2000m
180	7250′ (862′)	4000m
205	7250′ (862′)	4400m

PANS OPS 4

CHANGES: Minimums.

© JEPPESEN SANDERSON, INC., 1999, 2003. ALL RIGHTS RESERVED.

Licensed to mengnan. Printed on 22 Sep 2007.
Notice: After 26 Oct 2007 0901Z, this chart may no longer be valid. Disc 20-2007

JEPPESEN
JeppView 3.5.2.0

ZLLL/ZGC ZHONGCHUAN

JEPPESEN 21 FEB 03 (13-2)

LANZHOU, PR OF CHINA VOR DME Rwy 36

BRIEFING STRIP ™

*LANZHOU Tower 118.1

VOR	Final Apch Crs	Minimum Alt	MDA(H)	Apt Elev 6388′
ZGC *114.3	004°	D5.7 7710′	6820′ (491′)	RWY 6329′

MISSED APCH: Climb STRAIGHT AHEAD to 7390′, then turn RIGHT to reach VOR at 9350′ and contact ATC.

Alt Set: hPa Rwy Elev: 211 hPa Trans level: FL 157 Trans alt: 13780′ ❶

MSA ZGC VOR: 11,700′ (090°–270°) 10,900′

FT/METER CONVERSION QNH

14770′	4500m
13780′	4200m
12800′	3900m
9350′	2850m
9030′	2750m
7710′	2350m
7390′	2250m

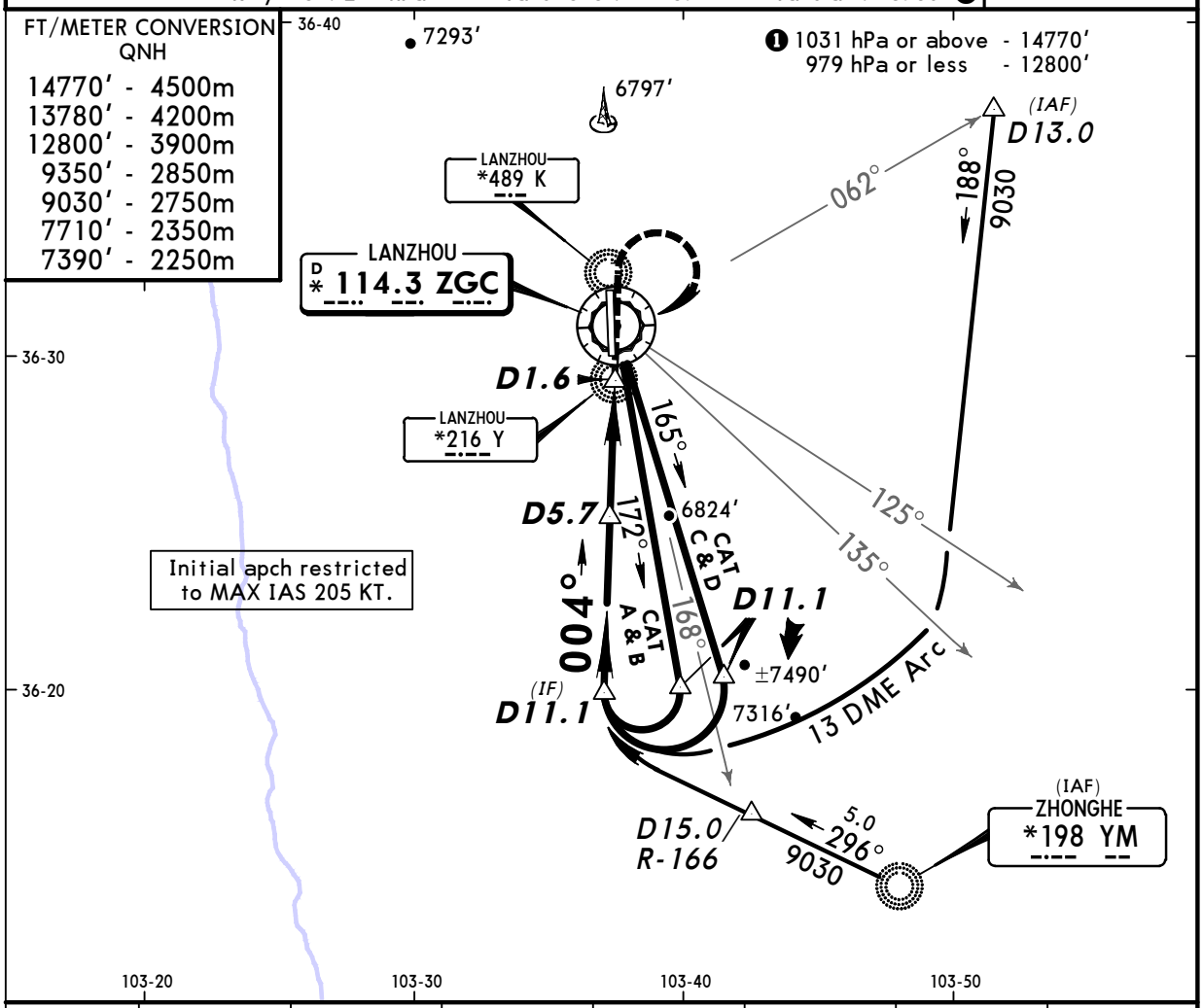

ZGC DME	8.0	7.0	6.0	5.0	4.0	3.0	2.0
ALTITUDE	8240′	7980′	7720′	7460′	7200′	6940′	6680′

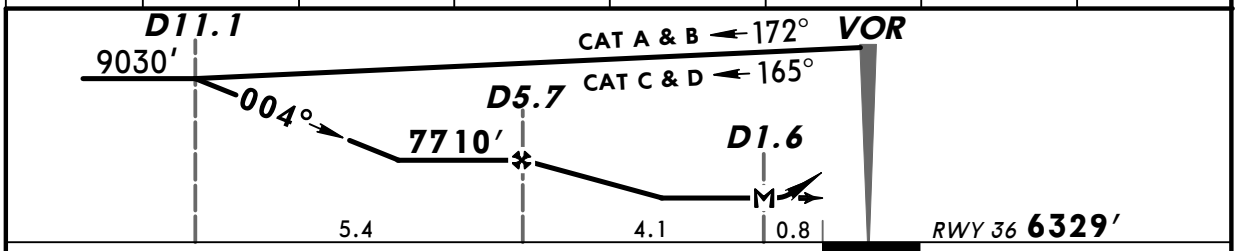

Gnd speed-Kts	70	90	100	120	140	160
Descent Gradient 4.3%	305	392	435	523	610	697
MAP at D1.6						

HIALS PAPI | 7390′ | 9350′ RT | ZGC 114.3

PANS OPS 4

	STRAIGHT-IN LANDING RWY 36 MDA(H) 6820′ (491′)		CIRCLE-TO-LAND Not authorized West of runway		
		ALS out	Max Kts	MDA(H)	
A	RVR 720m VIS 800m	RVR 1500m VIS 1600m	100	7150′ (762′)	1600m
B			135	7150′ (762′)	2000m
C	1200m	2000m	180	7250′ (862′)	4000m
D	RVR 1500m VIS 1600m	2400m	205	7250′ (862′)	4400m

CHANGES: Minimums.

© JEPPESEN SANDERSON, INC., 1999, 2003. ALL RIGHTS RESERVED.

Licensed to mengnan. Printed on 22 Sep 2007.
Notice: After 26 Oct 2007 0901Z, this chart may no longer be valid. Disc 20-2007

ZLLL/ZGC ZHONGCHUAN

JEPPESEN 21 FEB 03 (16-1)

LANZHOU, PR OF CHINA NDB DME Rwy 18

BRIEFING STRIP ™

*LANZHOU Tower
118.1

NDB	Final Apch Crs	Minimum Alt	MDA(H)	Apt Elev 6388′
KQ *237	180°	LOM 7880′	6890′ (502′)	RWY 6388′

MISSED APCH: Climb STRAIGHT AHEAD to 7390′, then turn LEFT to reach KQ NDB at 9350′.

Alt Set: hPa Rwy Elev: 213 hPa Trans level: FL 157 Trans alt: 13780′ ❶

MSA ZGC VOR: 11,700′ (090°–270°), 10,900′

❶ 1031 hPa or above - 14770′
979 hPa or less - 12800′

Initial apch restricted to MAX IAS 205 KT.

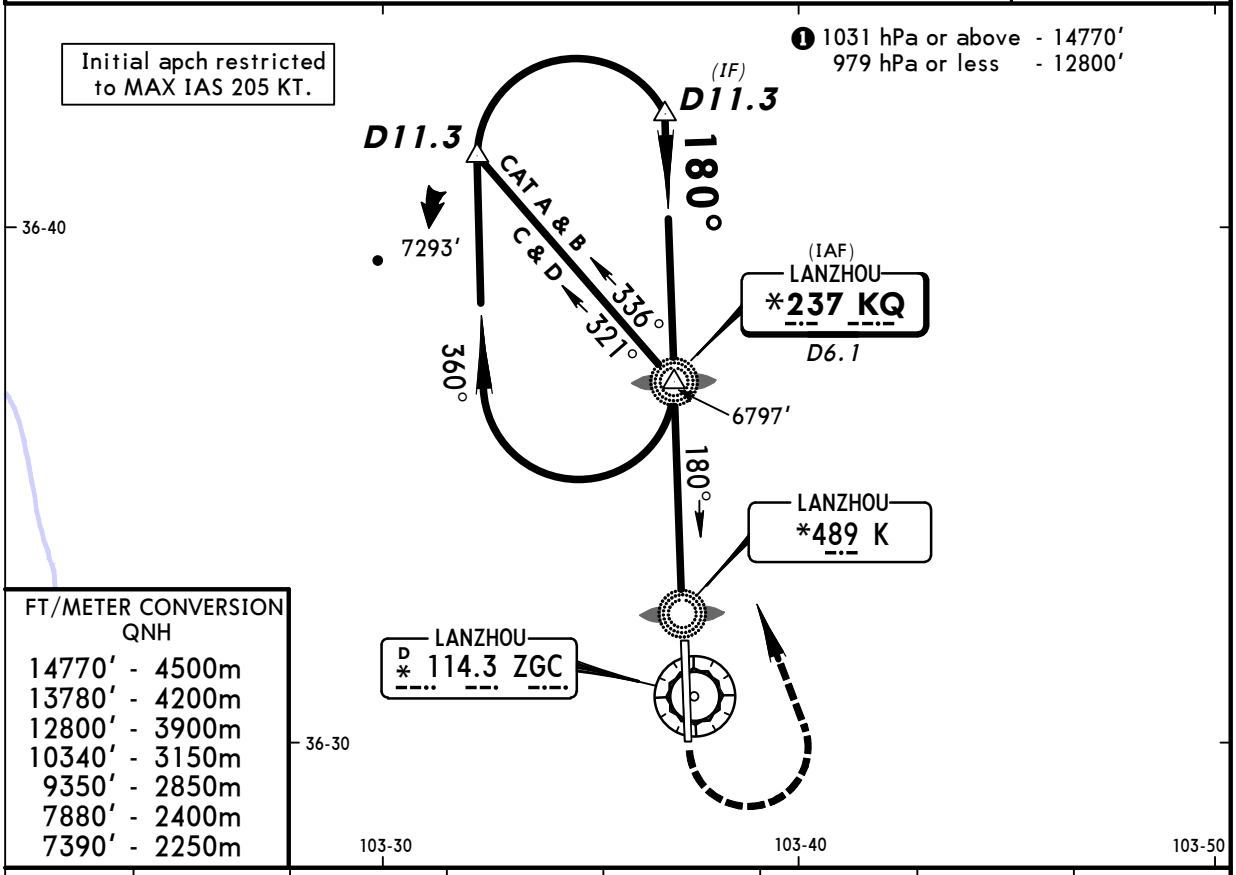

FT/METER CONVERSION
QNH

14770′	4500m
13780′	4200m
12800′	3900m
10340′	3150m
9350′	2850m
7880′	2400m
7390′	2250m

ZGC DME	8.0	7.0	6.0	5.0	4.0	3.0	2.0
ALTITUDE	8420′	8130′	7850′	7560′	7270′	6990′	6700′

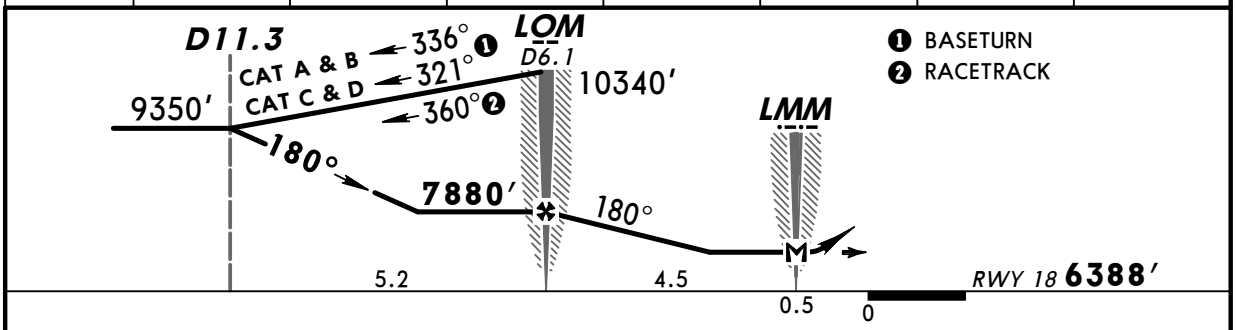

Gnd speed-Kts		70	90	100	120	140	160
Descent Gradient	4.7%	333	428	476	571	666	762
MAP at LMM							

MIALS
PAPI
7390′
9350′ LT
KQ 237

STRAIGHT-IN LANDING RWY 18

MDA(H) 6890′ (502′)

		ALS out
A	1200m	RVR 1500m VIS 1600m
B		
C	2400m	
D		

CIRCLE-TO-LAND

Not authorized West of runway

Max Kts	MDA(H)	
100	7150′ (762′)	1600m
135	7150′ (762′)	2000m
180	7250′ (862′)	4000m
205	7250′ (862′)	4400m

PANS OPS 4

CHANGES: Minimums.

© JEPPESEN SANDERSON, INC., 1999, 2003. ALL RIGHTS RESERVED.

Licensed to mengnan. Printed on 22 Sep 2007.
Notice: After 26 Oct 2007 0901Z, this chart may no longer be valid. Disc 20-2007

JEPPESEN
JeppView 3.5.2.0

ZLLL/ZGC ZHONGCHUAN

JEPPESEN 21 FEB 03 (16-2)

LANZHOU, PR OF CHINA NDB Rwy 18

BRIEFING STRIP ™

*LANZHOU Tower
118.1

NDB	Final Apch Crs	Minimum Alt	MDA(H)	Apt Elev 6388′
KQ *237	180°	LOM 7880′	7050′ (662′)	RWY 6388′

MISSED APCH: Climb STRAIGHT AHEAD to 7390′, then turn LEFT to reach KQ NDB at 9350′.

Alt Set: hPa Rwy Elev: 213 hPa Trans level: FL 157 Trans alt: 13780′ ❶

MSA ZGC VOR: 11,700′ (090°–270°), 10,900′

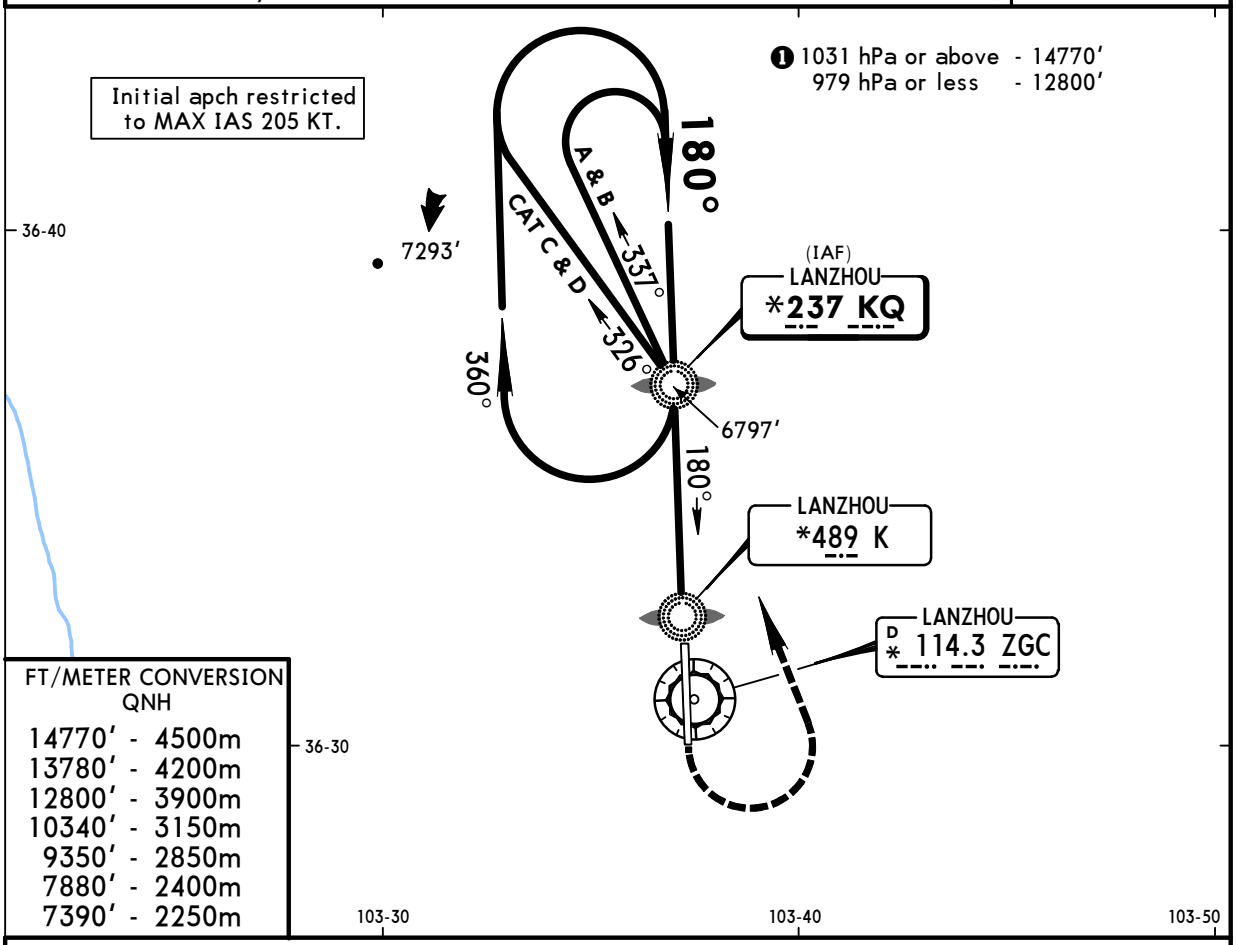

FT/METER CONVERSION
QNH

14770′	4500m
13780′	4200m
12800′	3900m
10340′	3150m
9350′	2850m
7880′	2400m
7390′	2250m

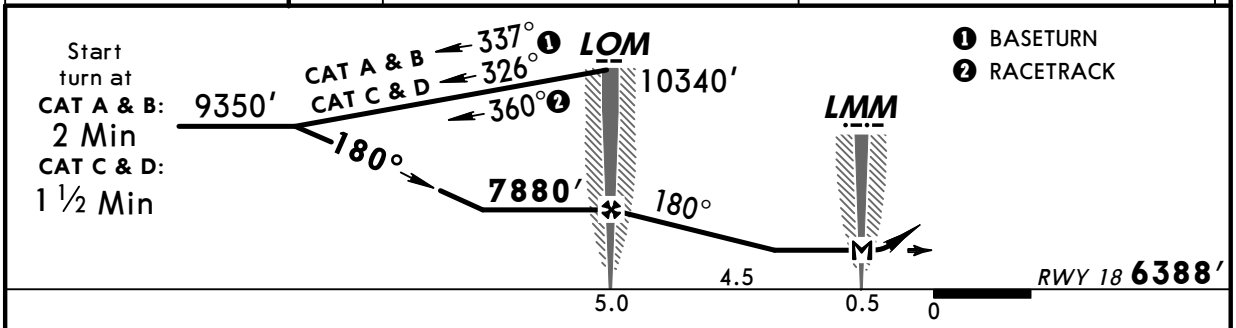

Gnd speed-Kts		70	90	100	120	140	160
Descent Gradient	4.7%	333	428	476	571	666	762
MAP at LMM							

MIALS PAPI | 7390′ | 9350′ LT | KQ 237

STRAIGHT-IN LANDING RWY 18

MDA(H) 7050′(662′)

		ALS out
A	1200m	RVR 1500m VIS 1600m
B		
C	2800m	
D	3200m	

CIRCLE-TO-LAND

Not authorized West of runway

Max Kts	MDA(H)	
100	7150′ (762′)	1600m
135	7150′ (762′)	2000m
180	7250′ (862′)	4000m
205	7250′ (862′)	4400m

PANS OPS 4

CHANGES: Minimums.

© JEPPESEN SANDERSON, INC., 1999, 2003. ALL RIGHTS RESERVED.

Licensed to mengnan. Printed on 22 Sep 2007.
Notice: After 26 Oct 2007 0901Z, this chart may no longer be valid. Disc 20-2007

ZLLL/ZGC ZHONGCHUAN

JEPPESEN 21 FEB 03 (16-3)

LANZHOU, PR OF CHINA NDB DME Rwy 36

BRIEFING STRIP ™

*LANZHOU Tower 118.1

Lctr	Final Apch Crs	Minimum Alt	MDA(H)	Apt Elev 6388′
Y *216	360°	D5.7 7710′	6820′ (491′)	RWY 6329′

MISSED APCH: Climb STRAIGHT AHEAD to 7390′, then turn RIGHT to reach Y Lctr at 9350′ and contact ATC.

Alt Set: hPa Rwy Elev: 211 hPa Trans level: FL 157 Trans alt: 13780′ ❶

11,700′
090° 270°
10,900′
MSA ZGC VOR

FT/METER CONVERSION
QNH
14770′ - 4500m
13780′ - 4200m
12800′ - 3900m
10340′ - 3150m
9350′ - 2850m
9030′ - 2750m
7710′ - 2350m
7390′ - 2250m

❶ 1031 hPa or above - 14770′
979 hPa or less - 12800′

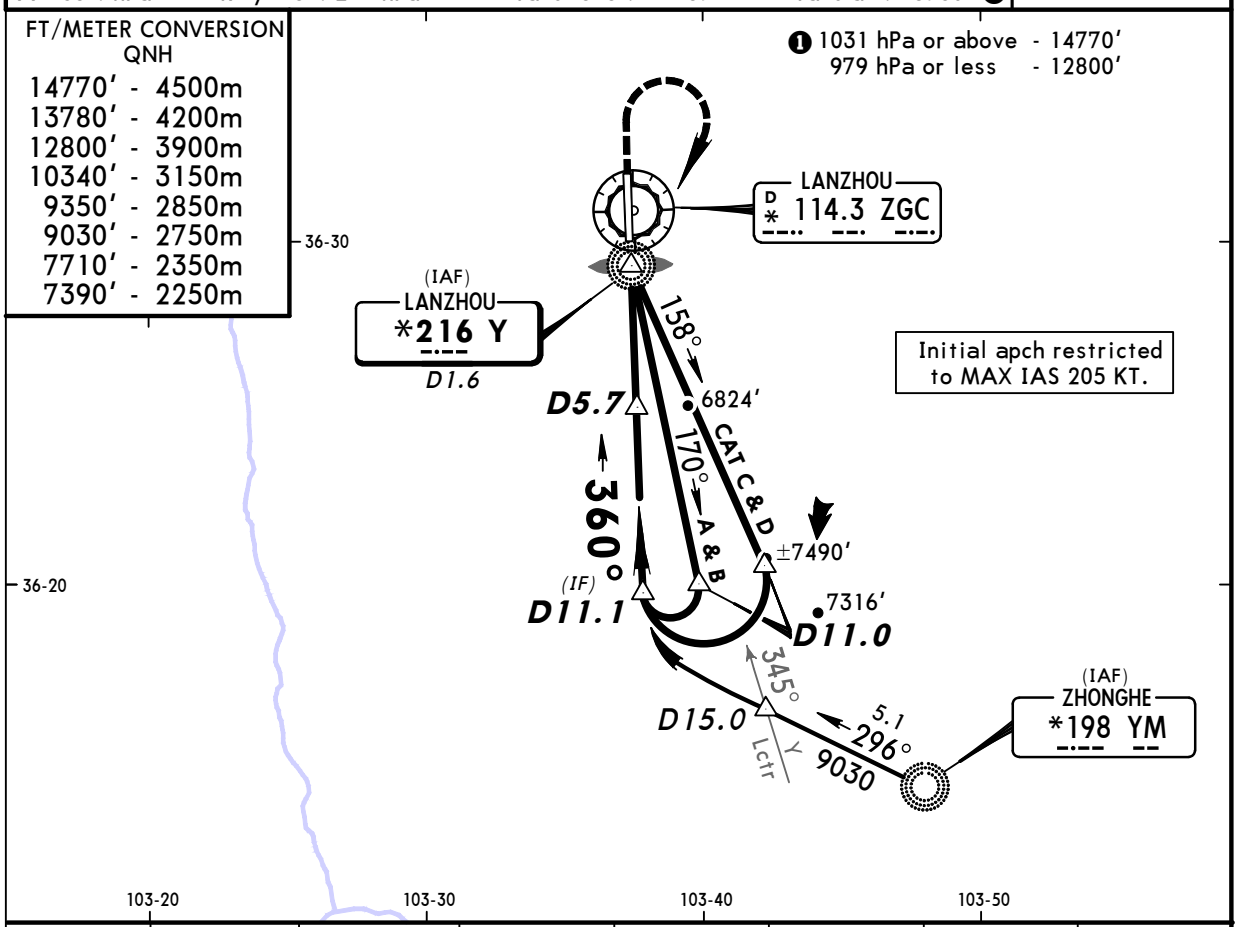

Initial apch restricted to MAX IAS 205 KT.

ZGC DME	1.0	2.0	3.0	4.0	5.0	6.0	7.0
ALTITUDE	6410′	6680′	6940′	7200′	7460′	7720′	7980′

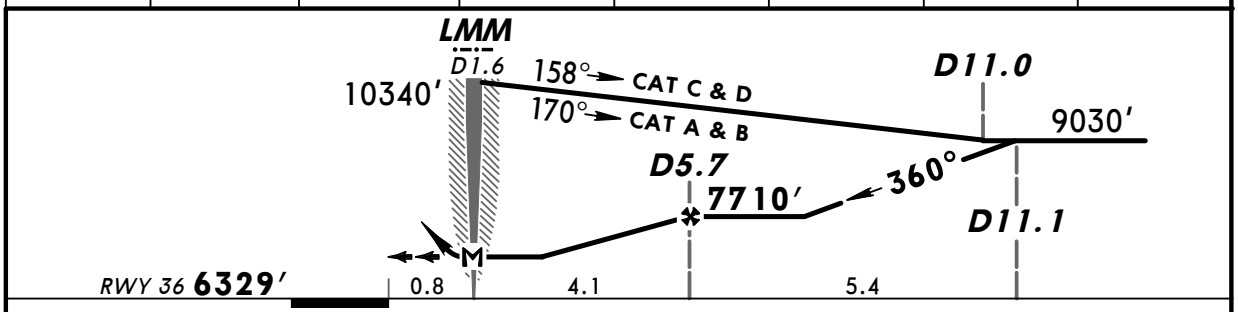

Gnd speed-Kts	70	90	100	120	140	160
Descent Gradient 4.3%	305	392	435	523	610	697
MAP at LMM/D1.6						

HIALS
PAPI

7390′ ↑

9350′ ↱ RT

Y 216

PANS OPS 4

STRAIGHT-IN LANDING RWY 36

MDA(H) 6820′ (491′)

		ALS out
A	1200m	RVR 1500m VIS 1600m
B		
C		2000m
D	2000m	2400m

CIRCLE-TO-LAND

Not authorized West of runway

Max Kts	MDA(H)	
100	7150′ (762′)	1600m
135	7150′ (762′)	2000m
180	7250′ (862′)	4000m
205	7250′ (862′)	4400m

CHANGES: Minimums.

© JEPPESEN SANDERSON, INC., 1999, 2003. ALL RIGHTS RESERVED.

Licensed to mengnan. Printed on 22 Sep 2007.
Notice: After 26 Oct 2007 0901Z, this chart may no longer be valid. Disc 20-2007

JEPPESEN
JeppView 3.5.2.0

ZLLL/ZGC ZHONGCHUAN

JEPPESEN
21 FEB 03 (16-4)

LANZHOU, PR OF CHINA NDB Rwy 36

BRIEFING STRIP ™

*LANZHOU Tower
118.1

Lctr	Final Apch Crs	Minimum Alt	MDA(H)	Apt Elev 6388′
Y *216	360°	No FAF	7090′ (761′)	RWY 6329′

MISSED APCH: Climb STRAIGHT AHEAD to 7390′, then turn RIGHT to reach Y Lctr at 9350′ and contact ATC.

Alt Set: hPa Rwy Elev: 211 hPa Trans level: FL 157 Trans alt: 13780′ ❶

MSA ZGC VOR
11,700′
090° 270°
10,900′

FT/METER CONVERSION
QNH
14770′ - 4500m
13780′ - 4200m
12800′ - 3900m
9350′ - 2850m
9030′ - 2750m
8700′ - 2650m
7390′ - 2250m

❶ 1031 hPa or above - 14770′
979 hPa or less - 12800′

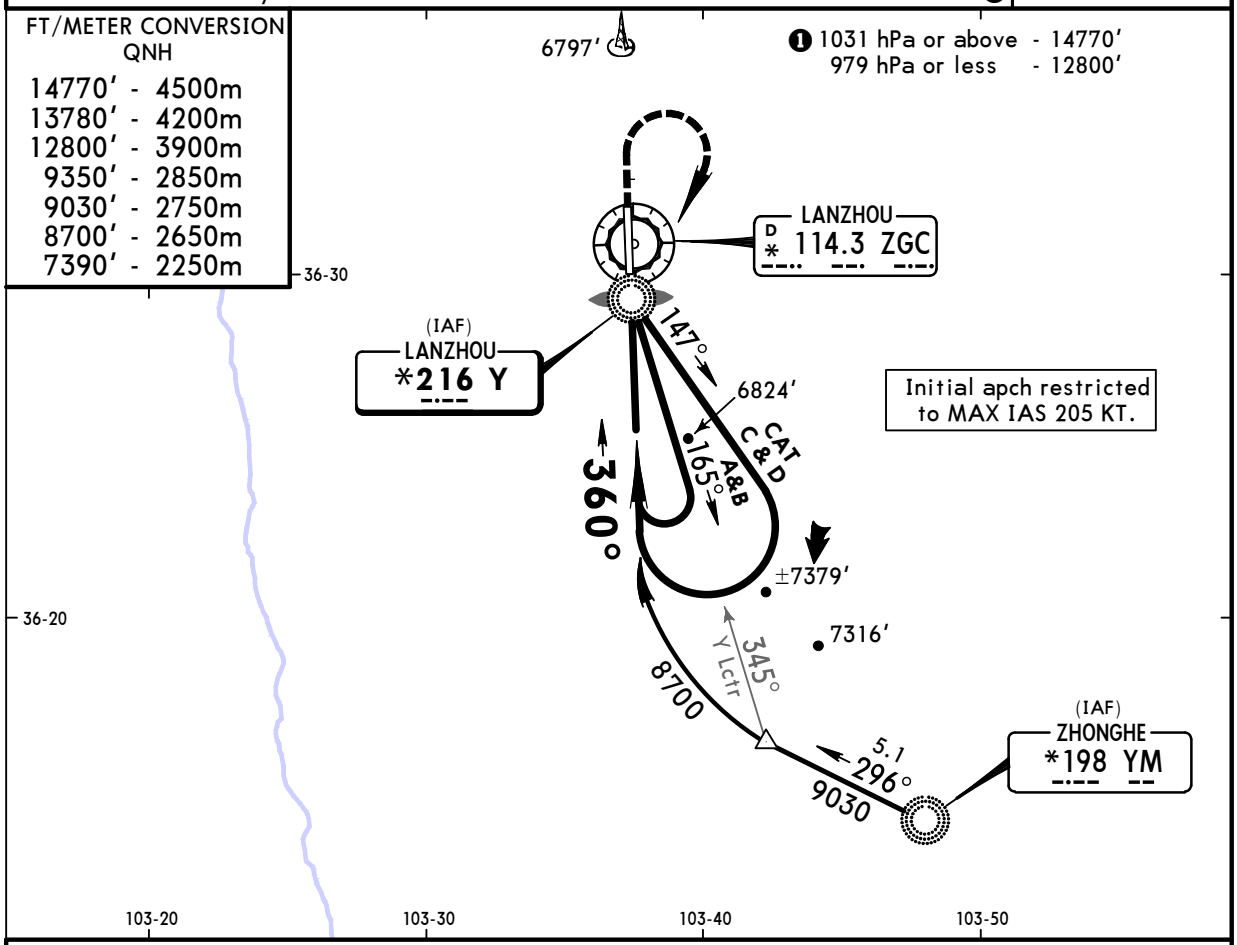

Initial apch restricted to MAX IAS 205 KT.

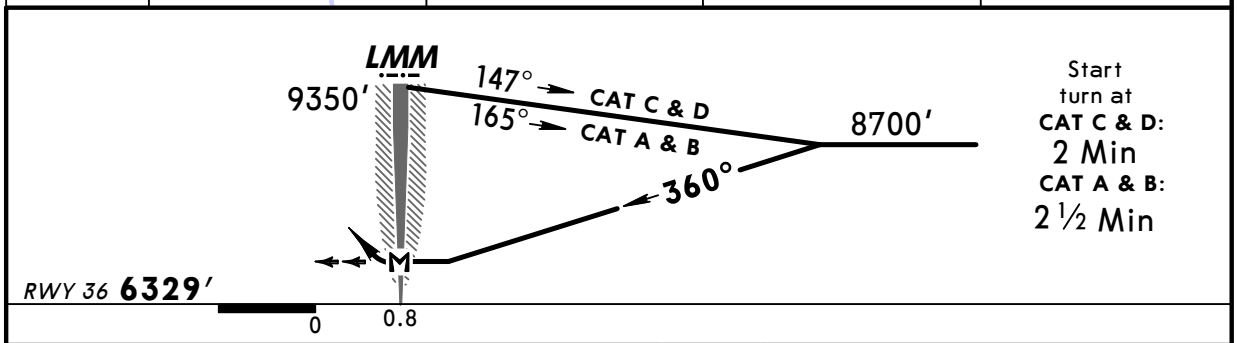

Start turn at
CAT C & D: 2 Min
CAT A & B: 2 ½ Min

MAP at LMM							HIALS PAPI	7390′	9350′ RT	Y 216

	STRAIGHT-IN LANDING RWY 36 MDA(H) 7090′ (761′)		CIRCLE-TO-LAND Not authorized West of runway		
		ALS out	Max Kts	MDA(H)	
A	1200m	RVR 1500m VIS 1600m	100	7150′ (762′)	1600m
B		2000m	135	7150′ (762′)	2000m
C	2800m	3600m	180	7250′ (862′)	4000m
D	3600m	4000m	205	7250′ (862′)	4400m

PANS OPS 4

CHANGES: Minimums.

© JEPPESEN SANDERSON, INC., 1999, 2003. ALL RIGHTS RESERVED.